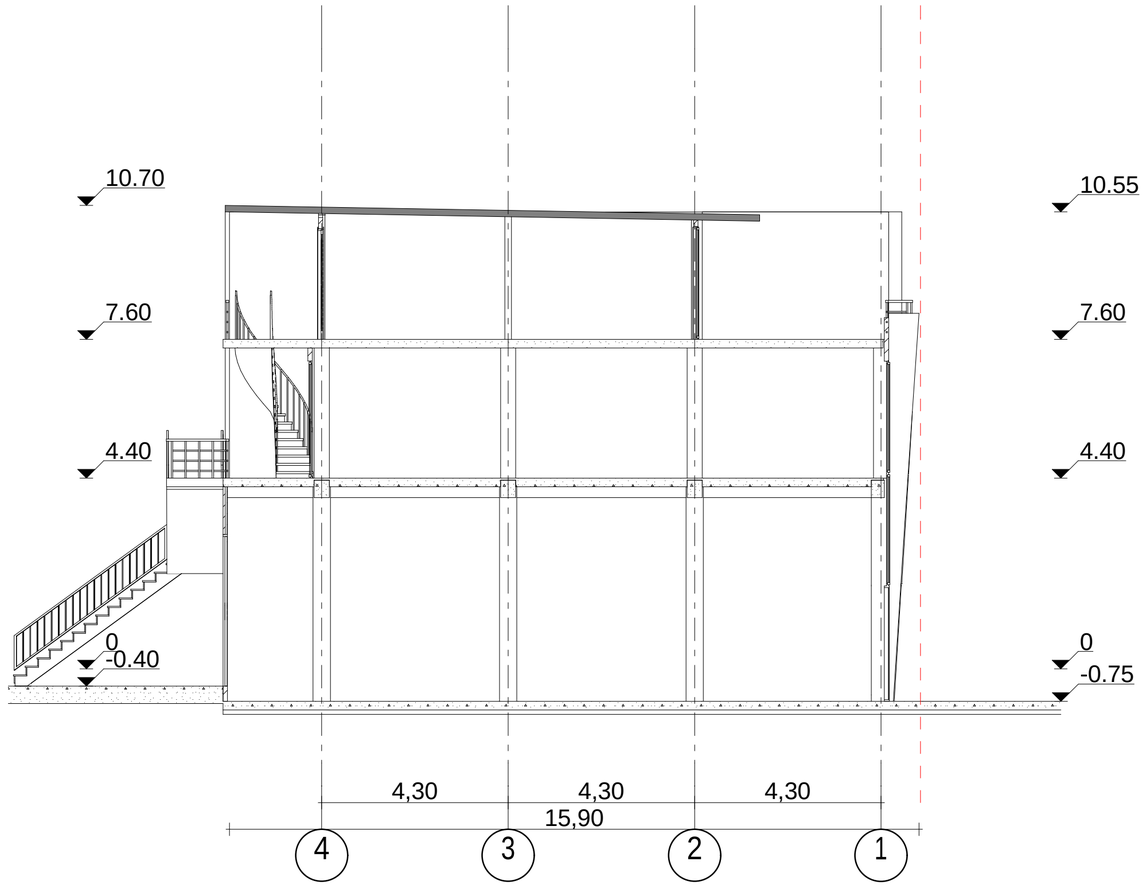

Wrili 11/11 **A** bloki				sasawyobe boqsebisa da avtoservisis proeqti	
xoSaraulis #30					
2015w	fur.	gv.	m. 1:100	arqiteqtori	l.RvinianiZe
				damkveTi	S.p.s "niu auto motorsi"

This file was generated with an evaluation version of the Amyuni(r) PDF Converter : http://www.amyuni.com

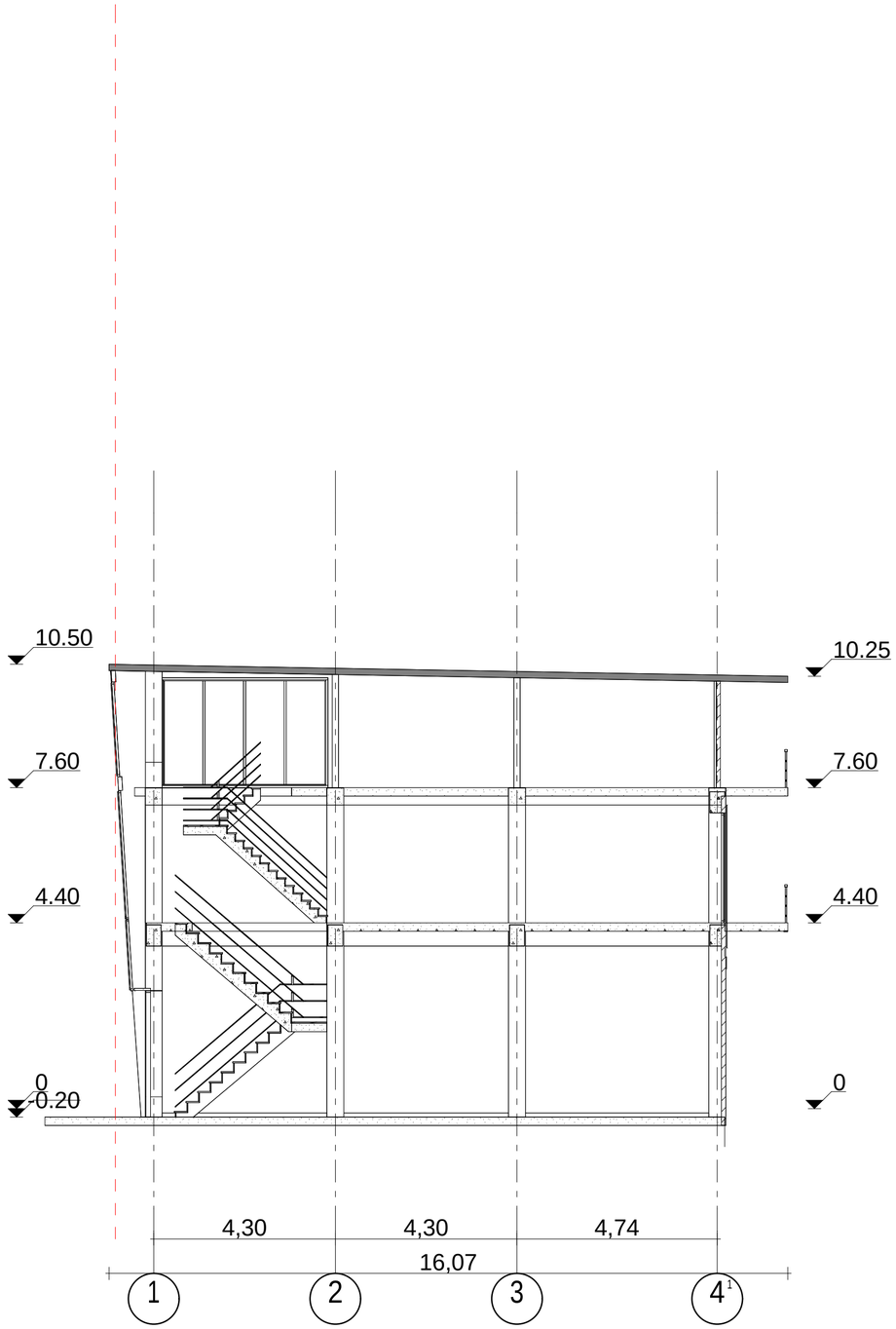

Wrili 1/1 A bloki				sasawyobe boqsebisa da avtoservisis proeqti
xoSaraulis #30				
2015w	fur.	gv.	m. 1:100	arqiteqtori l.RvinianiZe damkveTi S.p.s "niu auto motorsi"

This file was generated with an evaluation version of the Amyuni(r) PDF Converter : http://www.amyuni.com



Wrili 2/2 **A** bloki			sasawyobe boqsebisa da avtoservisis proeqti
xoSaraulis #30			arqiteqtori l.RvinianiZe
2015w	fur.	gv.	m. 1:100	damkveTi S.p.s "niu auto motorsi"

This file was generated with an evaluation version of the Amyuni(r) PDF Converter : http://www.amyuni.com

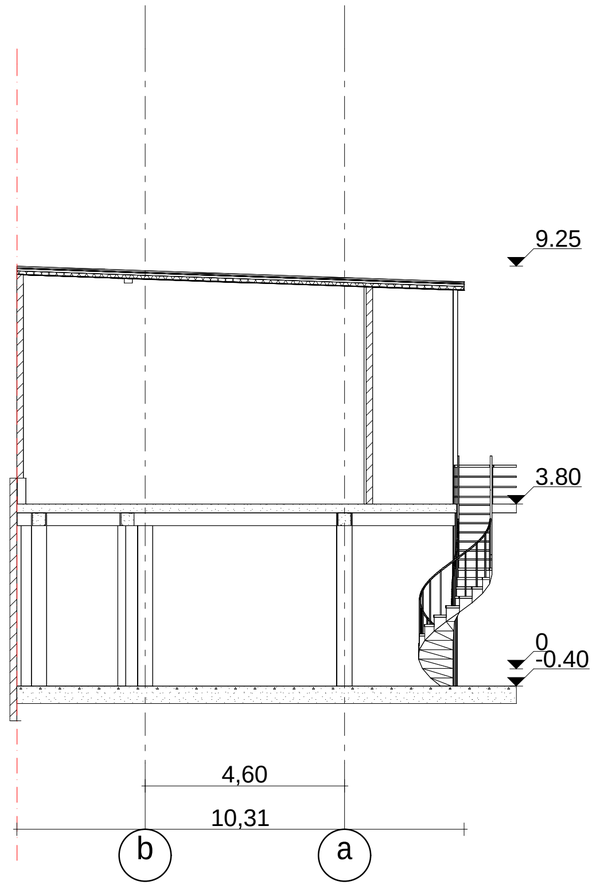

Wrili 4/4 **C** bloki				sasawyobe boqsebisa da avtoservisis proeqti
xoSaraulis #30				
2015w	fur.	gv.	m. 1:100	arqiteqtori l.RvinianiZe damkveTi S.p.s "niu auto motorsi"

This file was generated with an evaluation version of the Amyuni(r) PDF Converter : http://www.amyuni.com

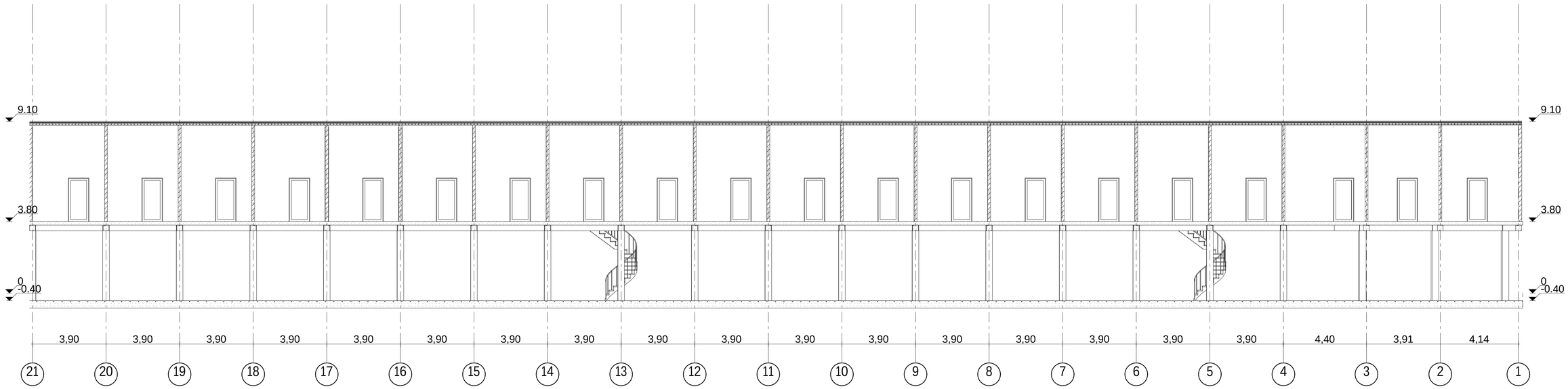

Wrili 3/3 **C** bloki	sasawyobe boqsebisa da avtoservisis proeqti
xoSaraulis #30	
2015w | fur. | gv. | m. 1:100	arqiteqtori l.Rvinianize damkveTi S.p.s "niu auto motorsi"

This file was generated with an evaluation version of the Amyuni PDF Converter : http://www.amyuni.com

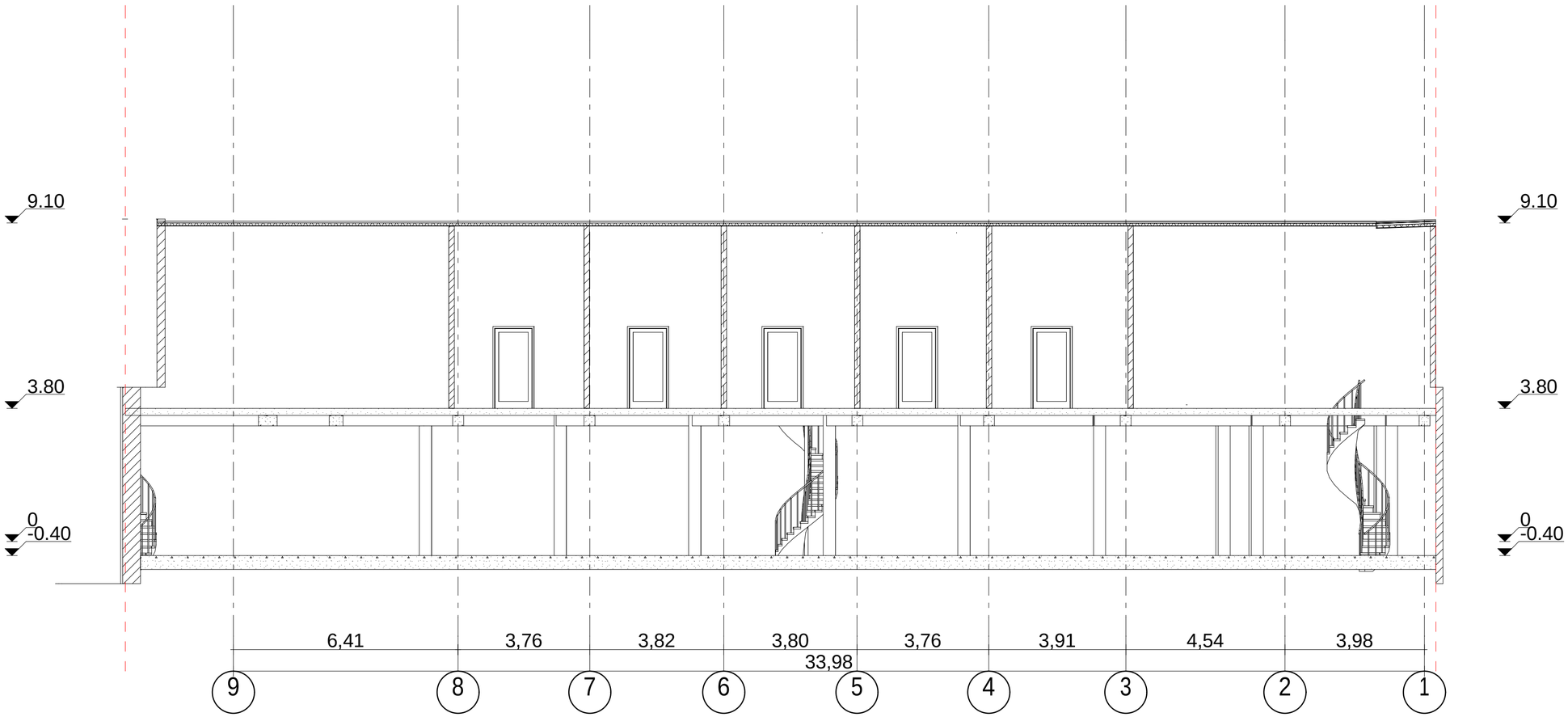

W r i l i 8/8 **E** b l o k i			sasawyobe boqsebisa da avtoservisis proeqti
xoSarau l is #30			arqiteqtori l.RvinianiZe
2015w	f u r.	gv.	m. 1:100	damkveTi S.p.s "niu auto motorsi"

This file was generated with an evaluation version of the Amyuni(r) PDF Converter : http://www.amyuni.com

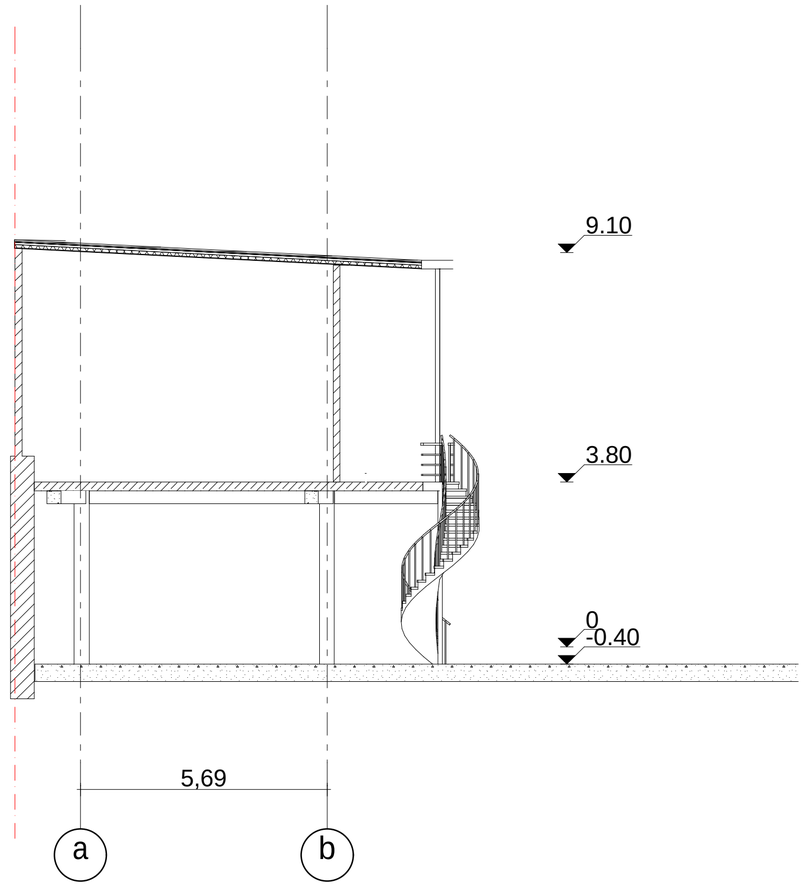

Wrili 7/7 **E** bloki			sasawyobe boqsebisa da avtoservisis proeqti
xoSaraulis #30			
2015w	fur.	gv.	m. 1:100

arqiteqtori l.RvinianiZe

damkveTi S.p.s "niu auto motorsi"

This file was generated with an evaluation version of the Amyuni(r) PDF Converter : http://www.amyuni.com

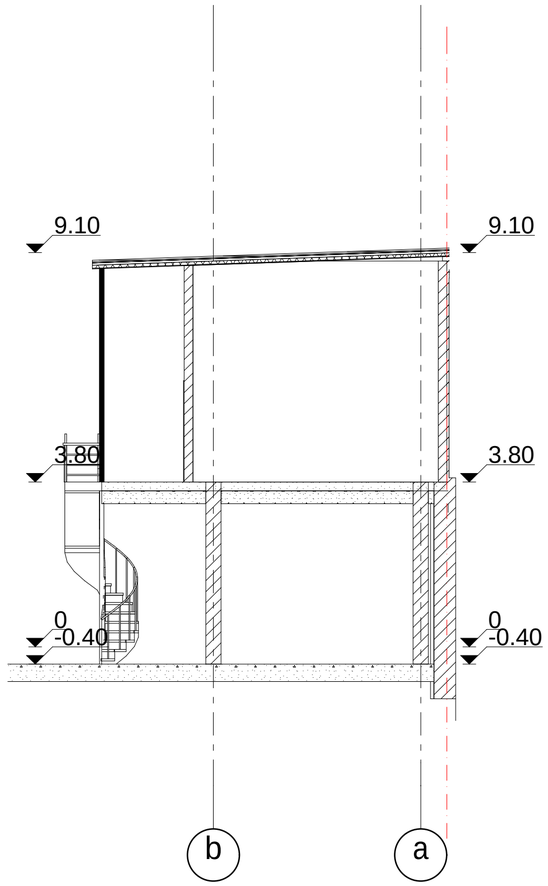

Wrili 10/10 **D** bloki				sasawyobe boqsebisa da avtoservisis proeqti
xoSaraulis #30				
2015w	fur.	gv.	m. 1:100	arqiteqtori l.RvinianiZe damkveTi S.p.s "niu auto motorsi"

This file was generated with an evaluation version of the Amyuni(r) PDF Converter : http://www.amyuni.com

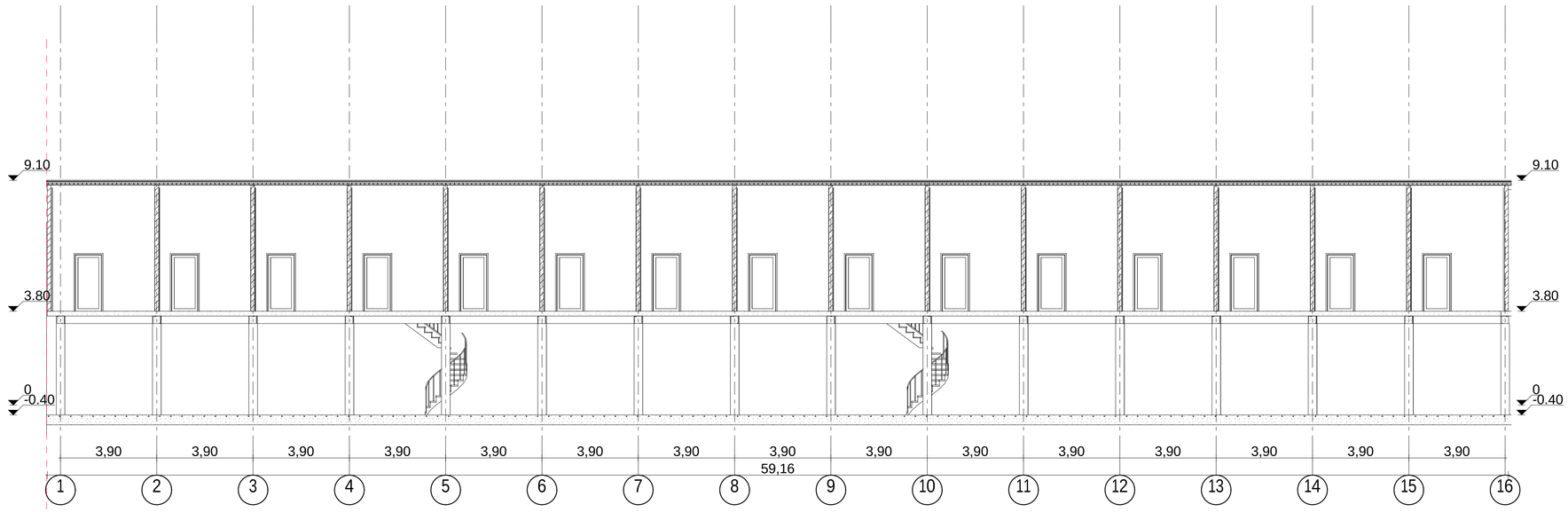

Wrili 9/9 **D** bloki				sasawyobe boqsebisa da avtoservisis proeqti
xoSaraulis #30				
				arqiteqtori l.RvinianiZe
2015w	fur.	gv.	m. 1:100	damkveTi S.p.s "niu auto motorsi"

This file was generated with an evaluation version of the Amyuni PDF Converter : http://www.amyuni.com

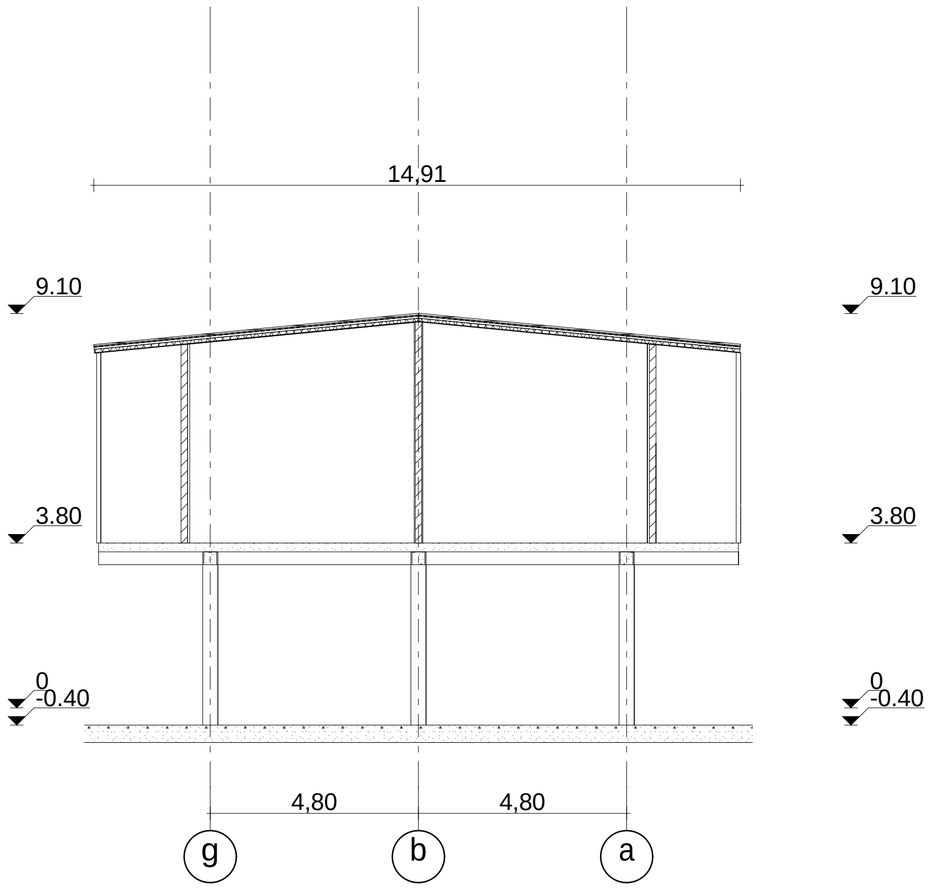

W r i l i 6/6 **B** b l o k i				sasawyobe boqsebisa da avtoservisis proeqti	
xoSarau l i s #30					
2015w	f u r.	gv.	m. 1:100	arqiteqtori	l .RvinianiZe
				damkveTi	S.p.s "niu auto motorsi"

This file was generated with an evaluation version of the Amyuni(r) PDF Converter : http://www.amyuni.com

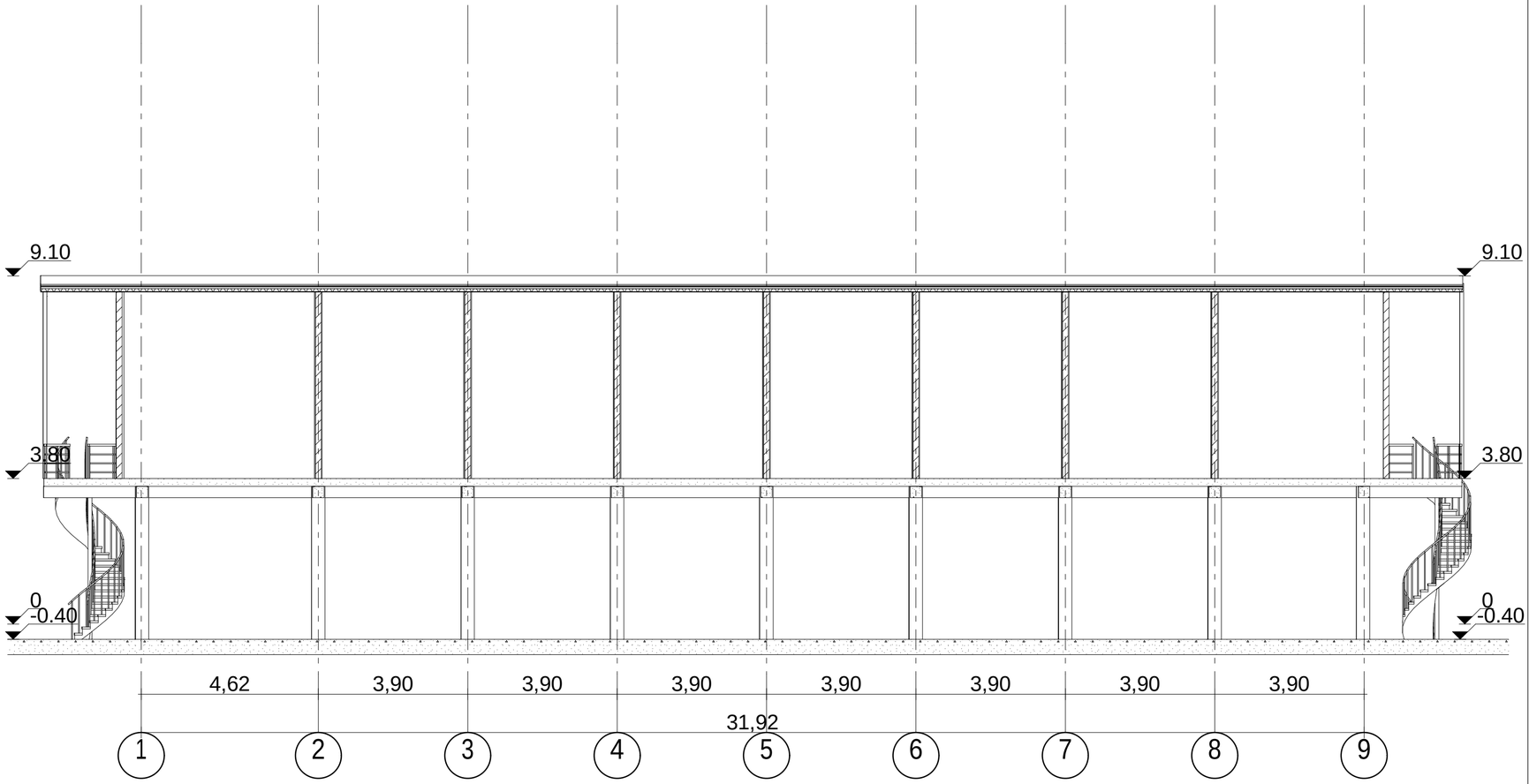

W r i l i 5/5 **B** b l o k i				sasawyobe boqsebisa da avtoservisis proeqti	
xoSarau l is #30				arqiteqtori	l .RvinianiZe
2015w	f u r.	gv.	m. 1:100	damkveTi	S.p.s "niu auto motorsi"

This file was generated with an evaluation version of the Amyuni(r) PDF Converter : http://www.amyuni.com