10. Happy Wheel ½Ë°²ÁÄ¼° ³¿Á³²¼°

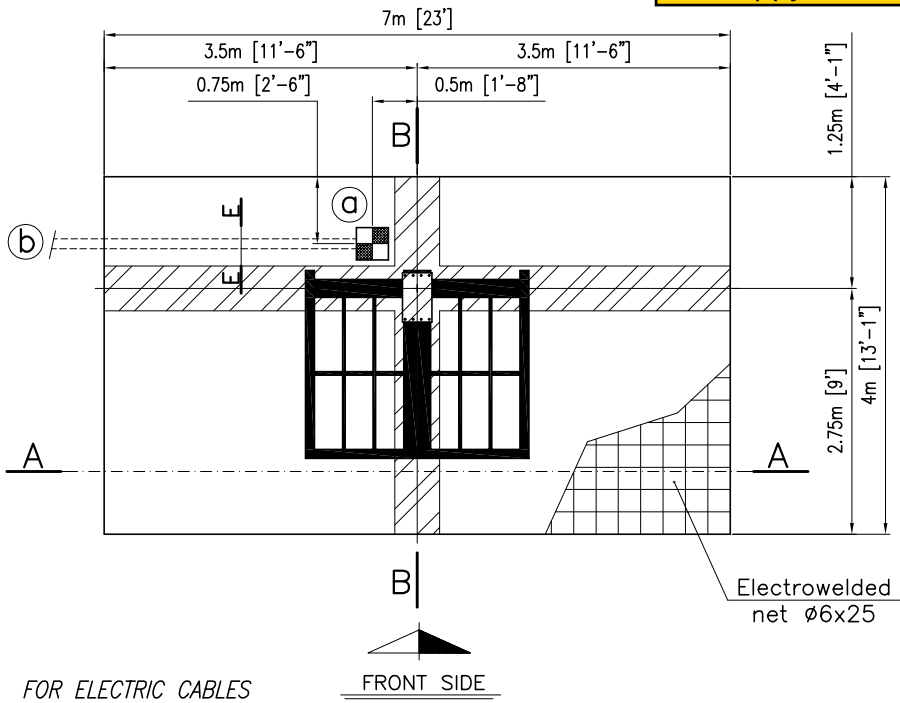

FRONT SIDE

SECTION B–B

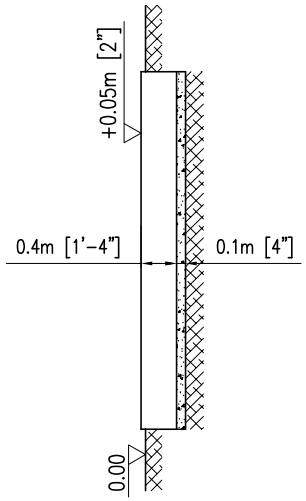

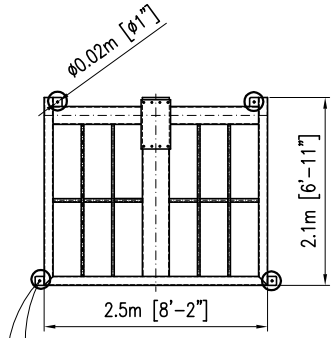

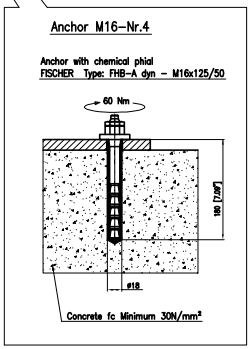

FOR ELECTRIC CABLES

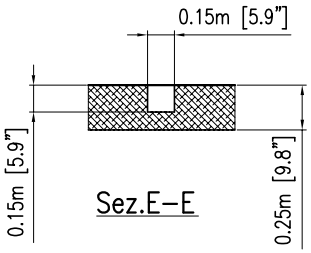

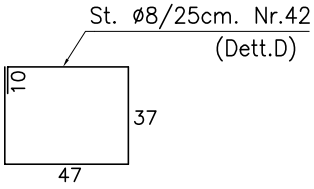

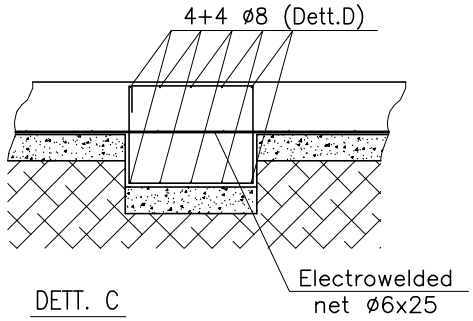

DETT. C

SECTION A–A

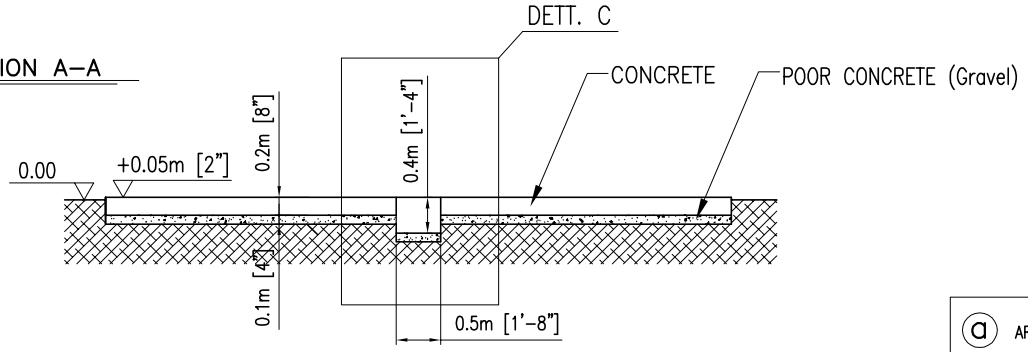

ⓐ ARRIVAL TRAP FOR THE RIDE FEEDING CABLES

ⓑ TUBE FROM PRINCIPAL LINE

B 450 C (*) – CONCRETE STEEL

CONCRETE FOR FOUNDATION WORKS

POOR CONCRETE (Gravel) Rck≅15 N/mm²

CONCRETE Rck=30 N/mm²

Concept only

N.B.: Foundation is calculated considering a σ =1Kg/cm²
if the soil should have σ <1Kg/cm² (Check with penetration test)
foundation must be modified.

All foundation and construction works are Client's responsibility and must be carried out by the Client in accordance with the soil conditions of the installation site and in accordance with the local regulations.

(*) Mechanical Characteristic: σ_s ≥450 MPa σ_m ≥540 MPa A≥12%

THE PRESENT DRAWING IS PURELY INDICATIVE, ANY INFORMATION CAN BE MODIFIED WITHOUT PRIOR ADVICE

SBF VISA GROUP
CASALE DI SCODOSIA (PADOVA) ITALY

PROJECT	BALLOON WHEEL 5
GROUP	FOUNDATION
MODEL	Park Model
MANUFACTURER	SBF-VISA GROUP
DRAWING NO.	RP.704.5M.FD
REV.	02
SCALE	1:50
DATE	04.2016
DRAWN	Nicola C.
CHECKED	"

All rights on the present drawing are reserved to SBF s.r.l. No technical data of from or by any means, without the prior written permission of SBF s.r.l.

15. Circus Swing ½³ÁÄ¾².º á°Á»°

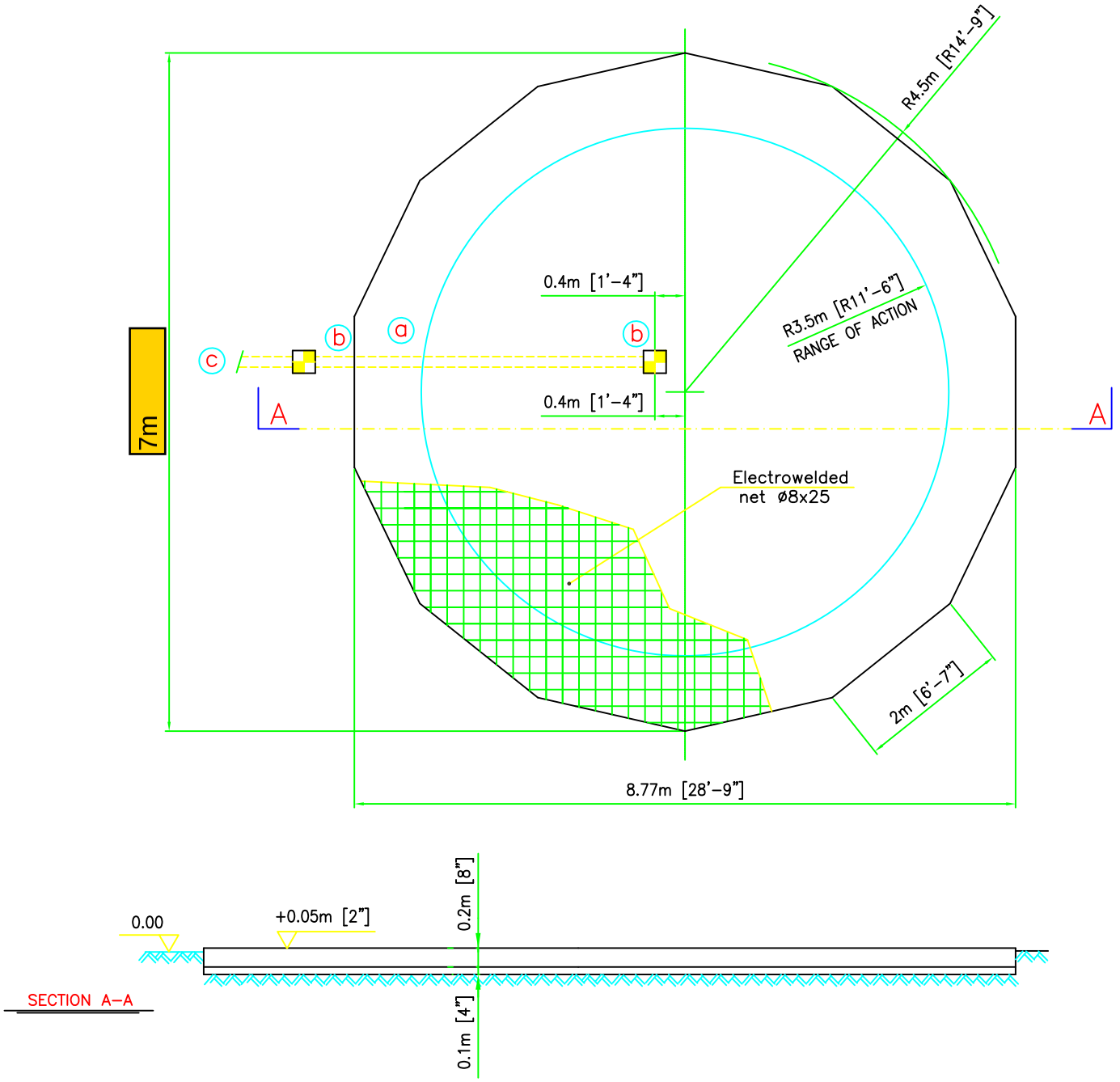

a TUBO ø150mm PER PASSAGGIO CAVI (Sotto Fondazione)
TUBE ø150mm FOR CABLES (Underfoundation)

b POZZETTO D'ARRIVO PER CAVI D'ALIMENTAZIONE GIOSTRA
ARRIVAL TRAP FOR THE RIDE FEEDING CABLES

c TUBO DELLA LINEA PRINCIPALE
TUBE FROM PRINCIPAL LINE

Fe B 44 K (*) – IMPROVED ADHESION STEEL RALLS: Controlled in the factory

CONCRETE FOR FOUNDATION WORKS

POOR CONCRETE (Gravel) Rck≅15 N/mm²

CONCRETE Rck=25 N/mm²

N.B.: Foundation is calculated considering a σ =1Kg/cm²
if the soil should have σ <1Kg/cm² (Check with penetration test)
foundation must be modified.

All foundation and construction works are Client's responsibility and must be carried out by the Client in accordance with the soil conditions of the installation site and in accordance with the local regulations.

(*) Mechanical Characteristic: σ_s ≥430 MPa σ_m ≥540 MPa A≥12%

THE PRESENT DRAWING IS PURELY INDICATIVE, ANY INFORMATION CAN BE MODIFIED WITHOUT PRIOR ADVICE

SBF VISA GROUP
CASALE DI SCODOSIA (PADOVA) ITALY

PROJECT	CIRCUS SWING-FLYING FARM	DRAWING NO.	F.4.09.29.01
		REV.	00
GROUP	FOUNDATION	SCALE	1:50
MODEL		DATE	09-04
		DRAWN	Nicola C.
MANUFACTURER	SBF-VISA GROUP	CHECKED	"

All rights on the present drawing are reserved to SBF s.r.l. No technical data of from or by any means, without the prior written permission of SBF s.r.l.

15. Cartoon Mill ²¾º½²á. ÉºÂÅ.º¼º

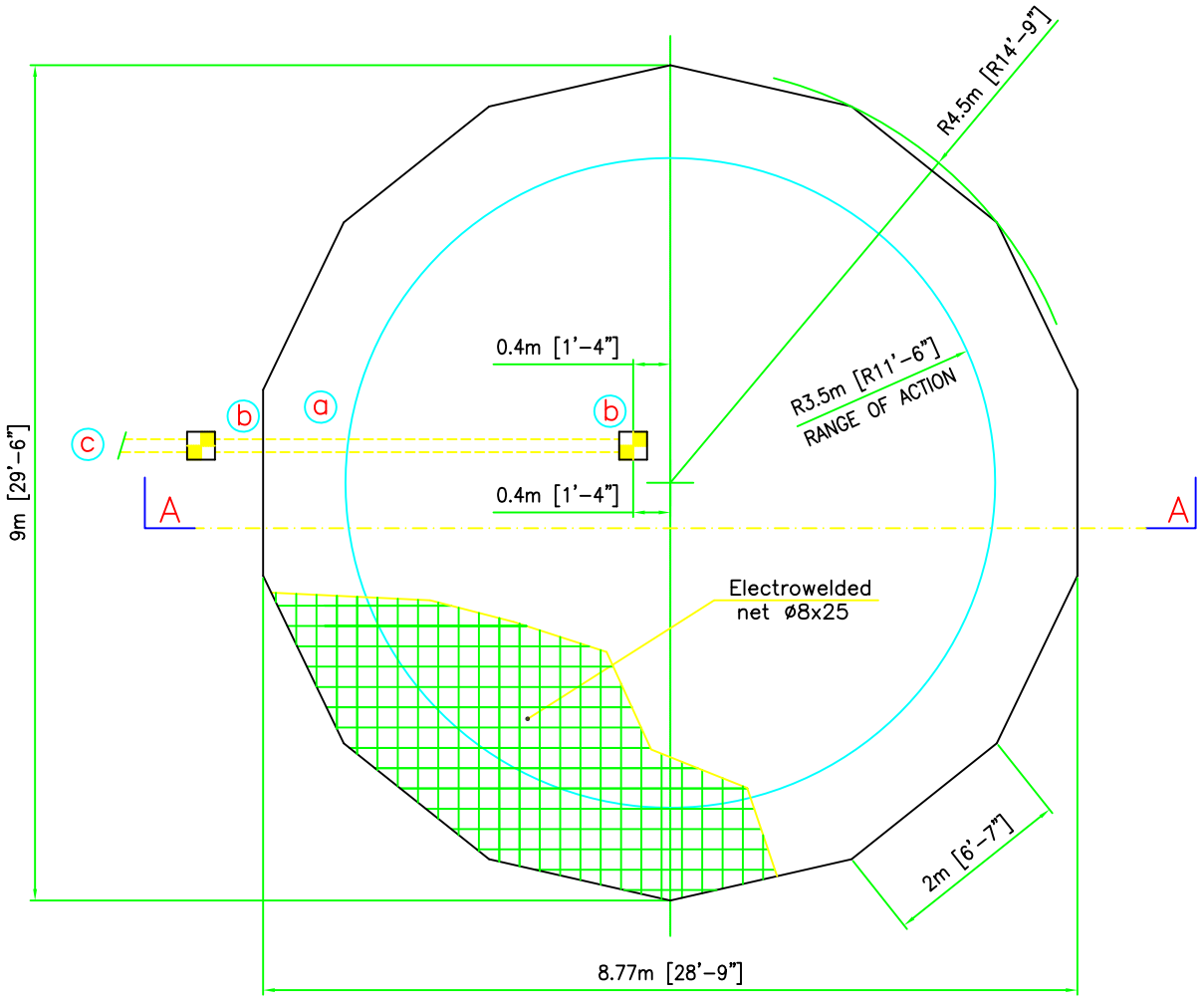

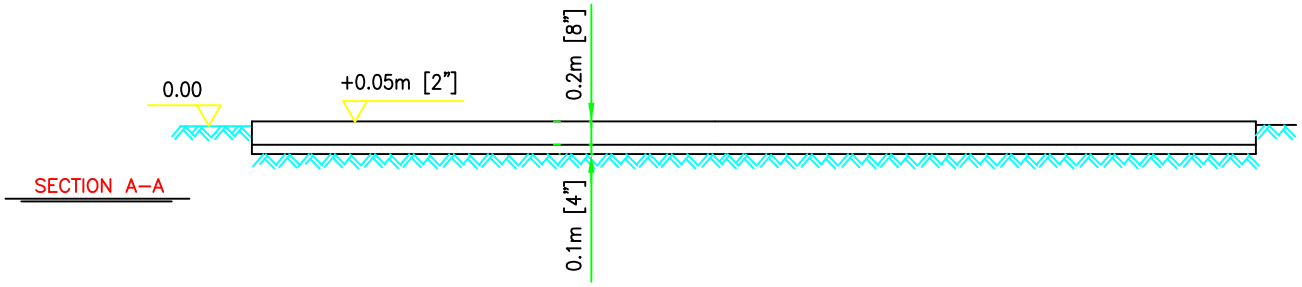

a TUBO ø150mm PER PASSAGGIO CAVI (Sotto Fondazione)
TUBE ø150mm FOR CABLES (Underfoundation)

b POZZETTO D'ARRIVO PER CAVI D'ALIMENTAZIONE GIOSTRA
ARRIVAL TRAP FOR THE RIDE FEEDING CABLES

c TUBO DELLA LINEA PRINCIPALE
TUBE FROM PRINCIPAL LINE

Fe B 44 K (*) – IMPROVED ADHESION STEEL RALLS: Controlled in the factory

CONCRETE FOR FOUNDATION WORKS

POOR CONCRETE (Gravel) Rck≅15 N/mm²

CONCRETE Rck=25 N/mm²

N.B.: Foundation is calculated considering a σ =1Kg/cm²
if the soil should have σ <1Kg/cm² (Check with penetration test)
foundation must be modified.

All foundation and construction works are Client's responsibility and must be carried out by the Client in accordance with the soil conditions of the installation site and in accordance with the local regulations.

(*) Mechanical Characteristic: $\sigma_s \geq 430$ MPa $\sigma_m \geq 540$ MPa A ≥ 12%

THE PRESENT DRAWING IS PURELY INDICATIVE, ANY INFORMATION CAN BE MODIFIED WITHOUT PRIOR ADVICE

SBF VISA GROUP
CASALE DI SCODOSIA (PADOVA) ITALY

PROJECT	CIRCUS SWING-FLYING FARM
GROUP	FOUNDATION
MODEL	
MANUFACTURER	SBF-VISA GROUP
DRAWING NO.	F.4.09.29.01
REV.	00
SCALE	1:50
DATE	09-04
DRAWN	Nicola C.
CHECKED	"

All rights on the present drawing are reserved to SBF s.r.l. No technical data of from or by any means, without the prior written permission of SBF s.r.l.

14.Choco Cups Æ²·ºÂ à¾ Ì ¾¶³º

ⓐ ARRIVAL TRAP FOR THE RIDE FEEDING CABLES

ⓑ TUBE FROM PRINCIPAL LINE

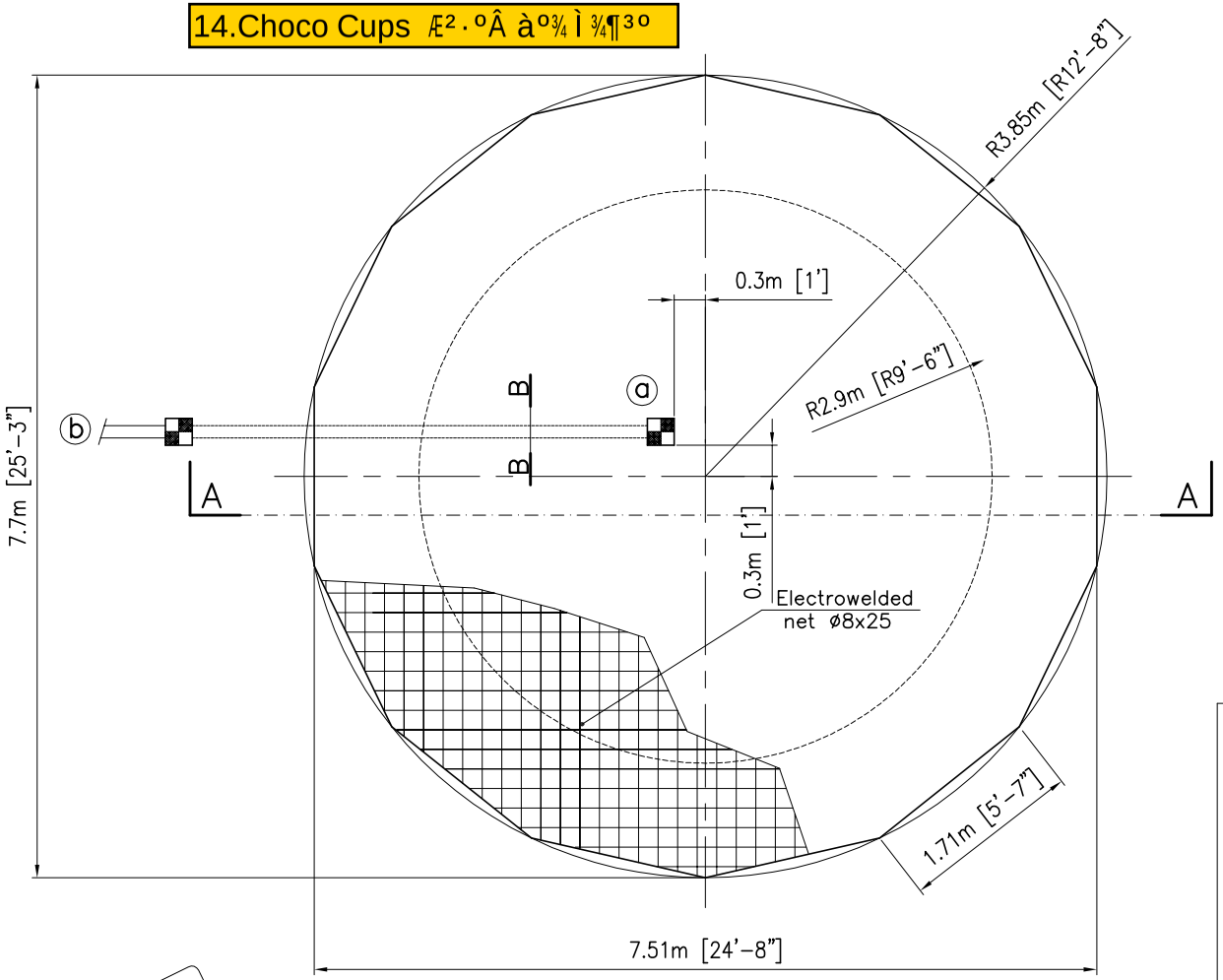

FOR ELECTRIC CABLES

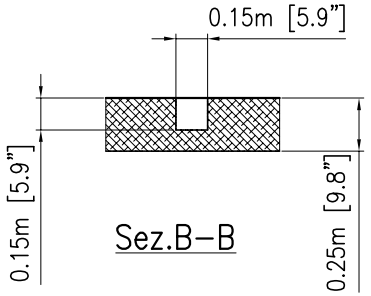

Concept only

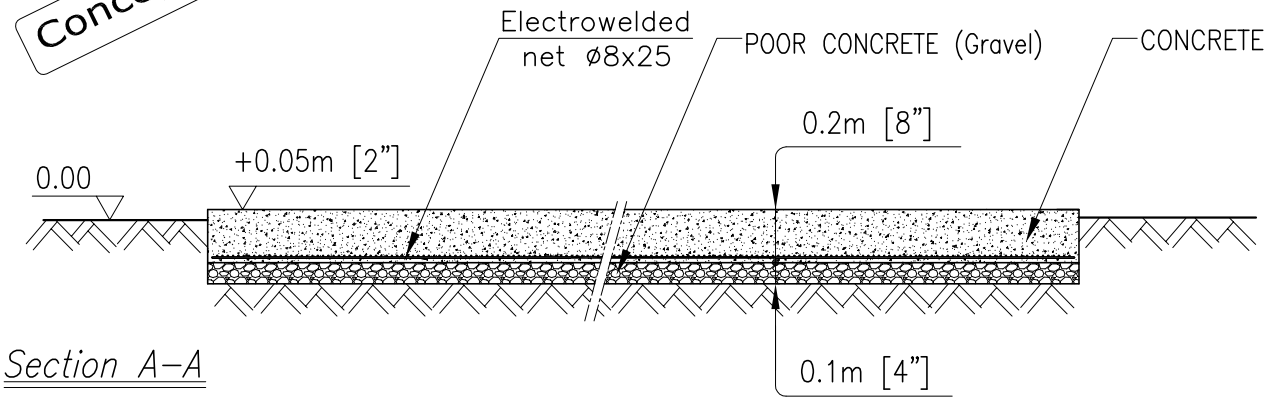

Section A-A

B 450 C (*) – CONCRETE STEEL

CONCRETE FOR FOUNDATION WORKS

POOR CONCRETE (Gravel) Rck≅15 N/mm²

CONCRETE Rck=25 N/mm²

N.B.: Foundation is calculated considering a σ =1Kg/cm²
if the soil should have σ <1Kg/cm² (Check with penetration test)
foundation must be modified.

All foundation and construction works are Client's responsibility and must be carried out by the Client in accordance with the soil conditions of the installation site and in accordance with the local regulations.

(*) Mechanical Characteristic: σ_s ≥ 450 MPa σ_m ≥ 540 MPa A ≥ 12%

THE PRESENT DRAWING IS PURELY INDICATIVE, ANY INFORMATION CAN BE MODIFIED WITHOUT PRIOR ADVICE

SBF VISA GROUP
CASALE DI SCODOSIA (PADOVA) ITALY

PROJECT	COFFEE CUPS ø5.5m
GROUP	FOUNDATION
MODEL	Park Model
MANUFACTURER	SBF-VISA GROUP
DRAWING NO.	GB.T.01.14.FD
REV.	01
SCALE	1:50
DATE	04.2016
DRAWN	Nicola C.
CHECKED	"

All rights on the present drawing are reserved to SBF s.r.l. No technical data of from or by any means, without the prior written permission of SBF s.r.l.

14.Choco Cups Æ²·ºÂ à°¾Ì¾¶³º

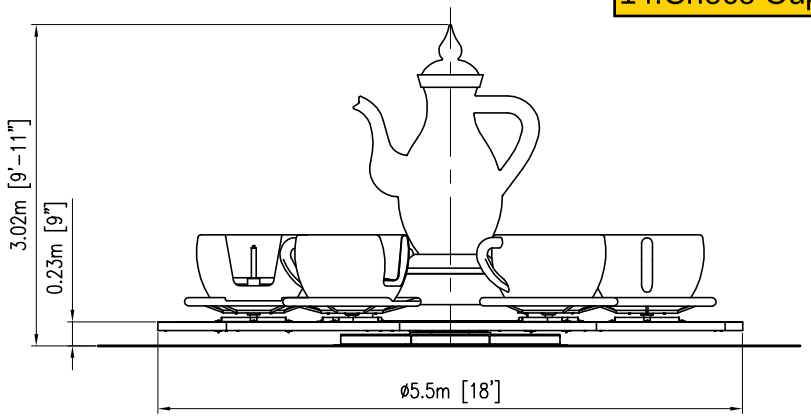



GROUND LOAD

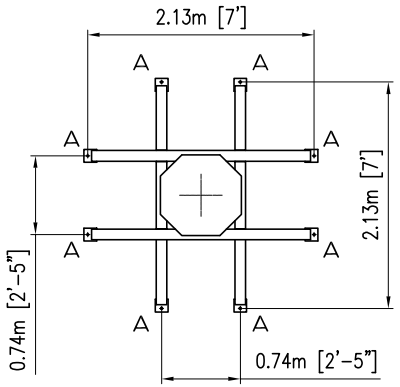

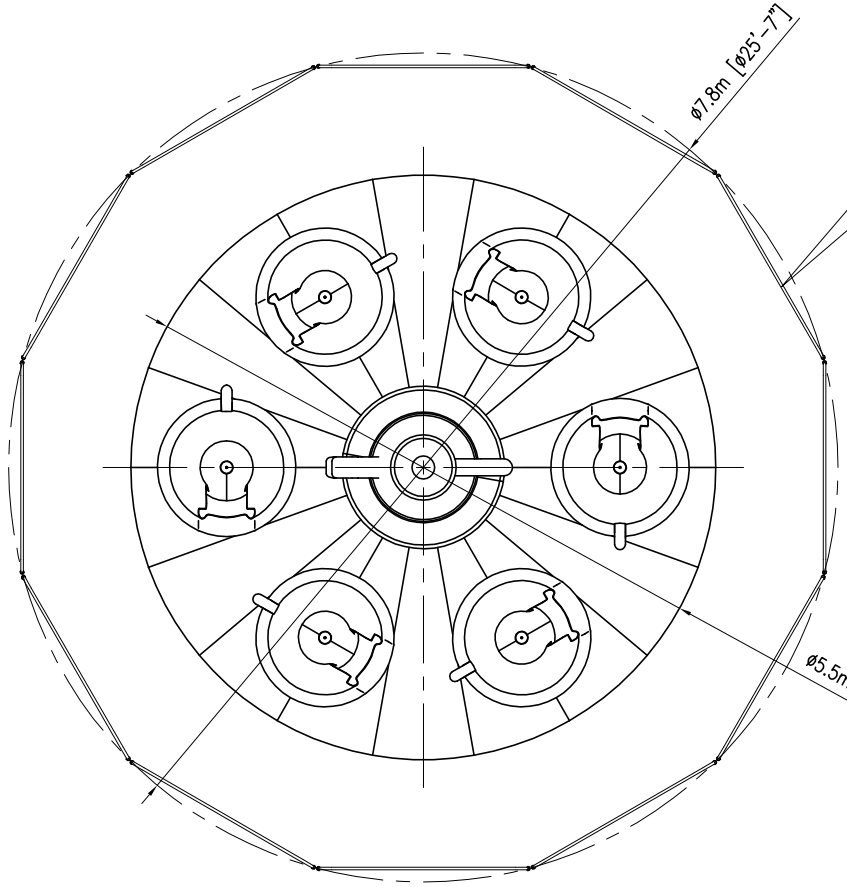

MINIMUM SAFETY ENVELOPE
POSSIBLE FENCES NOT SUPPLIED BY S.B.F.

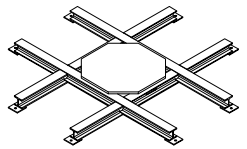

GENERAL INFORMATION					
1	DIMENSIONS (OPERATION AREA)	Ø5.5xH=3.1m	5	DIRECTION OF ROTATION	Clockwise-Anticlockwise
2	VEHICLES	6	6	CUBAGE	1x20' Open Top
3	NUMBER OF SEATING	24	7		
4	MAXIMUM OPERATIONAL SPEED	5 rpm	8		

ELECTRICAL INFORMATION			LOAD INFORMATION		
1	MOTIVE POWER	1.5 kW	1	TOTAL RIDE WEIGHT	2000 Kg.
2	LIGHT POWER (STD)	0.5 kW	2	SUPPORT ON THE FLOOR:	Nr. 8
	LIGHT POWER (LED)	-	3	STATIC LOAD (A)	250 Kg.
3	OTHER POWER	-	4	DYNAMIC LOAD	400 Kg.
4	TOTAL POWER	2 kW	5	LOAD ON ACTION'S AREA	320 Kg/m2
5	VOLTAGE	220/380/415V - 50/60 Hz			

THE PRESENT DRAWING IS PURELY INDICATIVE, ANY INFORMATION CAN BE MODIFIED WITHOUT PRIOR ADVICE

SBF VISA GROUP
CASALE DI SCODOSIA (PADOVA) ITALY

PROJECT	COFFEE CUPS ø5.5m
GROUP	GENERAL SCHEME
MODEL	T.01.14 – Park Model
MANUFACTURER	SBF-VISA GROUP

DRAWING NO.	GB.T.01.14.GS	REV. 01
SCALE	1:50	
DATE	04.2016	
DRAWN	Nicola C.	
CHECKED	"	

All rights on the present drawing are reserved to SBF s.r.l. No technical data of from or by any means, without the prior written permission of SBF s.r.l.

2. Family Coaster Â²¿ Ì ²Ë¿ ½¹¶³º

a TUBO ø150mm PER PASSAGGIO CAVI (Sotto Fondazione)
TUBE ø150mm FOR CABLES (Underfoundation)

b POZZETTO D'ARRIVO PER CAVI D'ALIMENTAZIONE GIOSTRA
ARRIVAL TRAP FOR THE RIDE FEEDING CABLES

c TUBO DELLA LINEA PRINCIPALE
TUBE FROM PRINCIPAL LINE

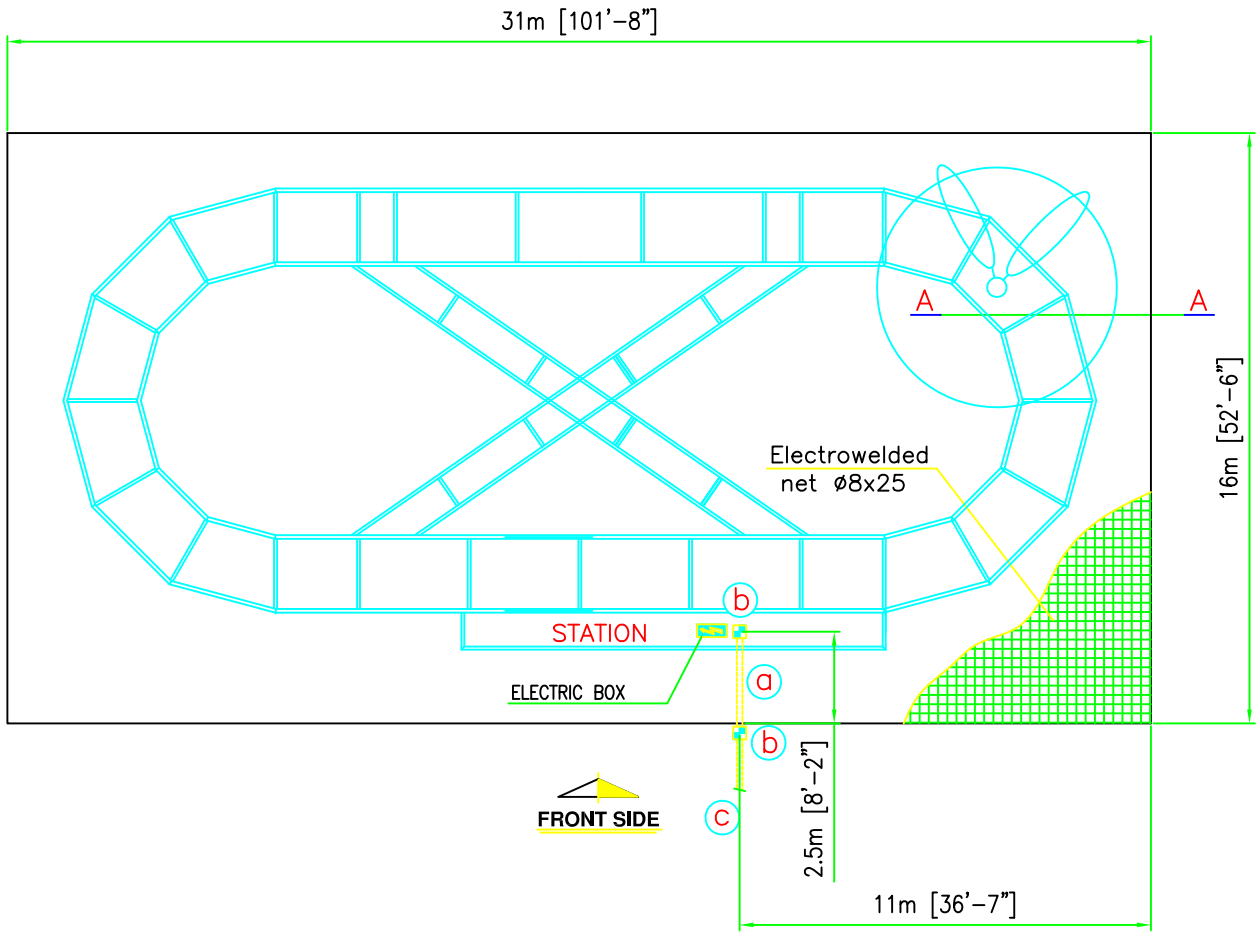

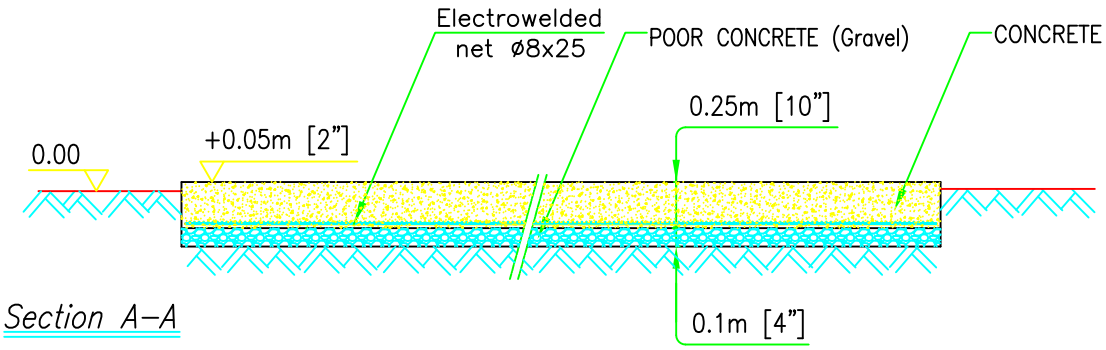

Section A-A

Fe B 44 K (*) - IMPROVED ADHESION STEEL RALLS: Controlled in the factory

CONCRETE FOR FOUNDATION WORKS

POOR CONCRETE (Gravel) Rck≅15 N/mm²

CONCRETE Rck=25 N/mm²

N.B.: Foundation is calculated considering a σ =1Kg/cm²
if the soil should have σ <1Kg/cm² (Check with penetration test)
foundation must be modified.

All foundation and construction works are Client's responsibility and must be carried out by the Client in accordance with the soil conditions of the installation site and in accordance with the local regulations.

(*) Mechanical Characteristic: σ_s ≥430 MPa σ_m ≥540 MPa A ≥12%

THE PRESENT DRAWING IS PURELY INDICATIVE, EVERY INFORMATION CAN BE MODIFIED WITHOUT WARNING

SBF VISA GROUP
CASALE DI SCODOSIA (PADOVA) ITALY

PROJECT	FAMILY COASTER
GROUP	FOUNDATION
MODEL	MX000
MANUFACTURER	SBF-VISA GROUP
DRAWING NO.	F.4.10.12.02
REV.	01
SCALE	1:50
DATE	02.2011
DRAWN	Nicola C.
CHECKED	"

All rights on the present drawing are reserved to SBF s.r.l. No technical data of from or by any means, without the prior written permission of SBF s.r.l.

10. Happy Wheel ½Ë°²ÁÄ¼° ³¿Á³²¼°

Peso totale a vuoto–Tot weight (empty): 2800 kg

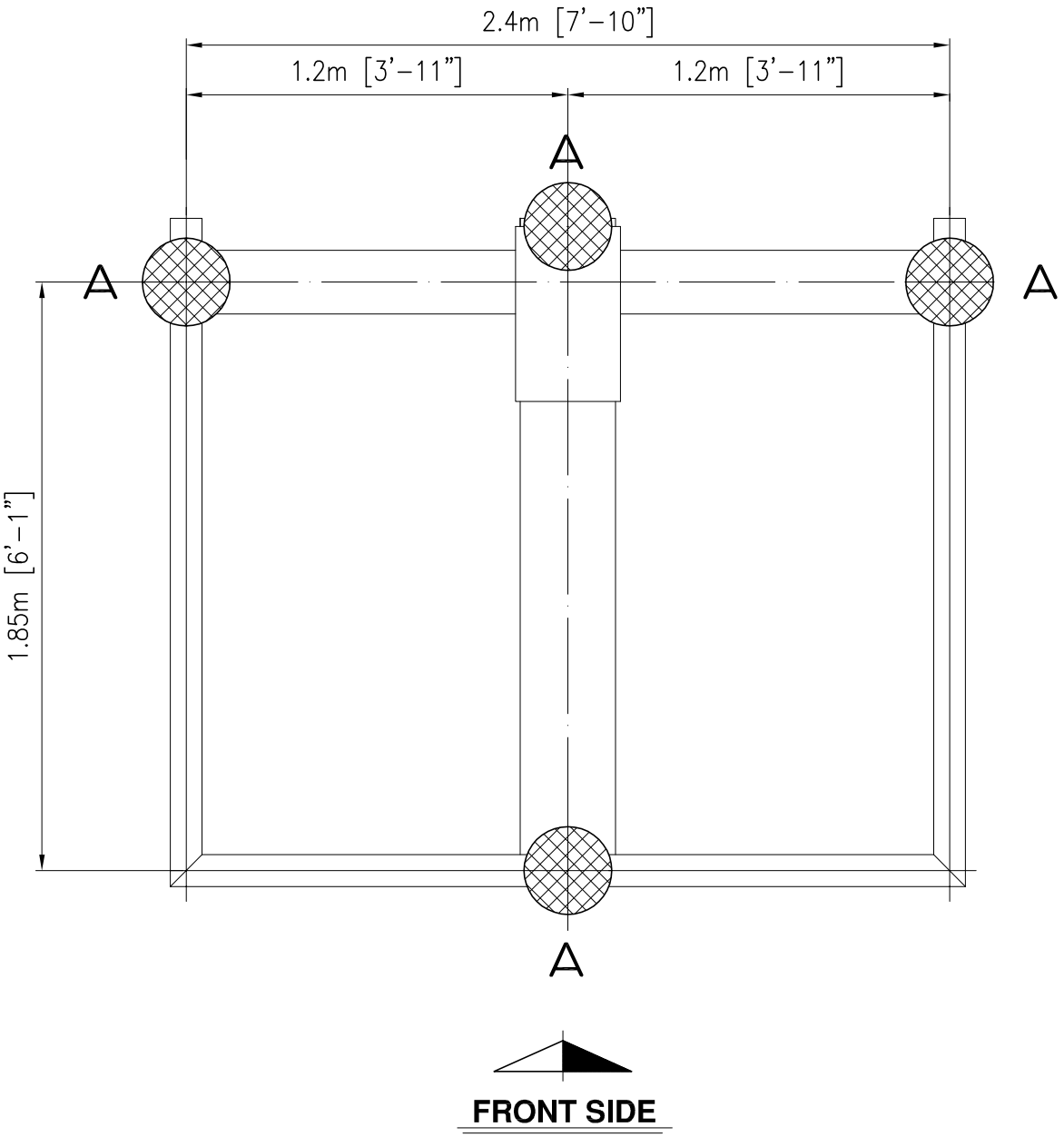

FRONT SIDE

MAX DYNAMIC LOAD (NR.4)	
A	1200 KG.

LOAD ON ACTION'S AREA: 300KG/M2

NB: I carichi prodotti dal vento non sono considerati.
PS: Without Wind Load.

The choice of the place of installation and the installation of the ride is a total responsibility of the Client.
Therefore, especially for installation on floors, pay attention to the ground loads shown on this plan so that the support structure (floor or foundation) is properly sized and suitable, for purpose.
Moreover all foundation and construction works are Client's responsibility and must be carried out by the Client in accordance with the soil condition of the installation site and in accordance with the local regulations.

THE PRESENT DRAWING IS PURELY INDICATIVE, ANY INFORMATION CAN BE MODIFIED WITHOUT PRIOR ADVICE

SBF VISA GROUP
CASALE DI SCODOSIA (PADOVA) ITALY

PROJECT	KIDDIE WHEEL 5
GROUP	GROUND LOADING
MODEL	Park Model INDOOR
MANUFACTURER	SBF-VISA GROUP

DRAWING NO.	RP.704.5M.GL	REV. 01
SCALE	1:50	
DATE	04.2016	
DRAWN	Nicola C.	
CHECKED	"	

All rights on the present drawing are reserved to SBF s.r.l. No technical data of form or by any means, without the prior written permission of SBF s.r.l.

10. Happy Wheel ½Ë°²ÁÄ¼° ³¿Á³²¼°

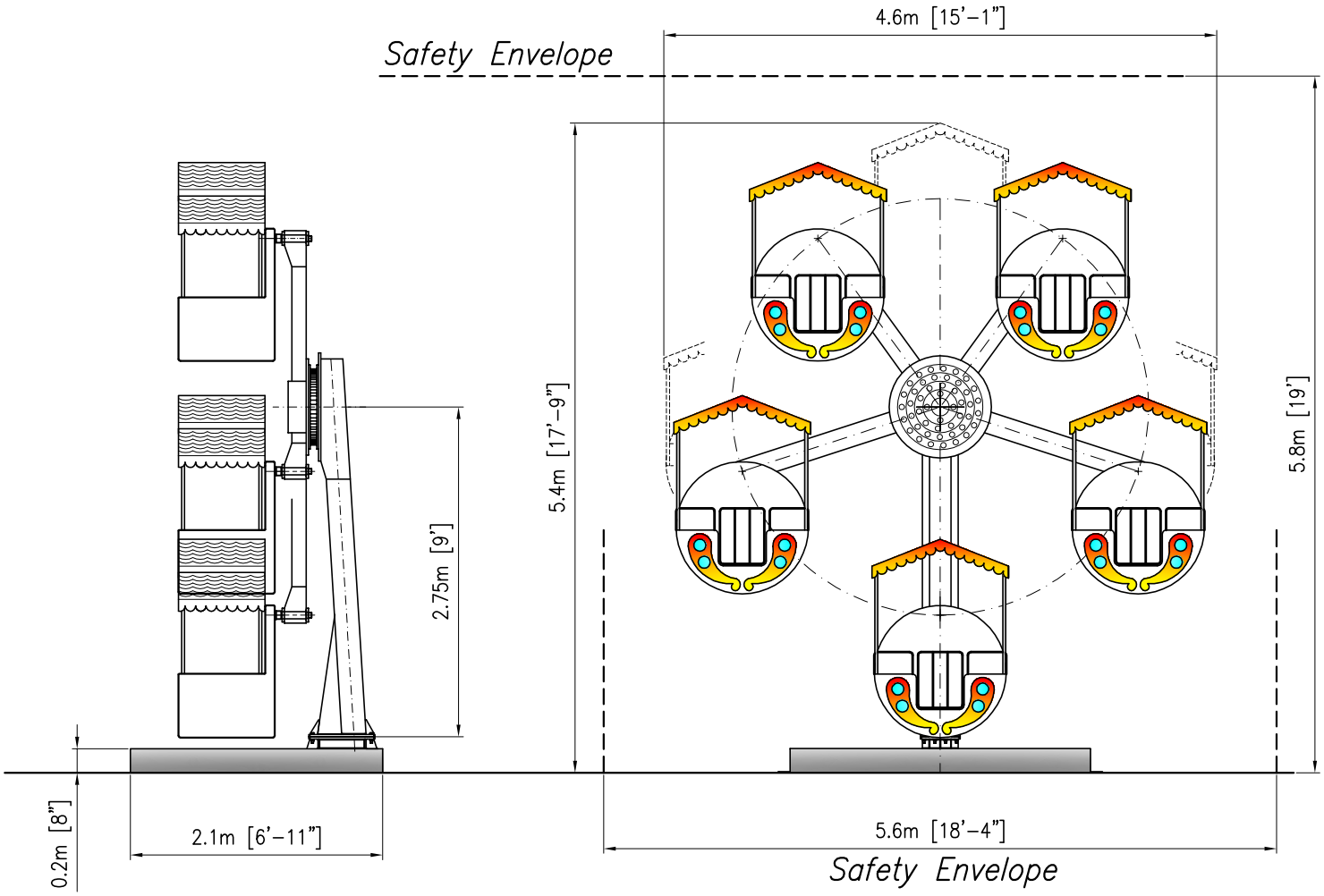

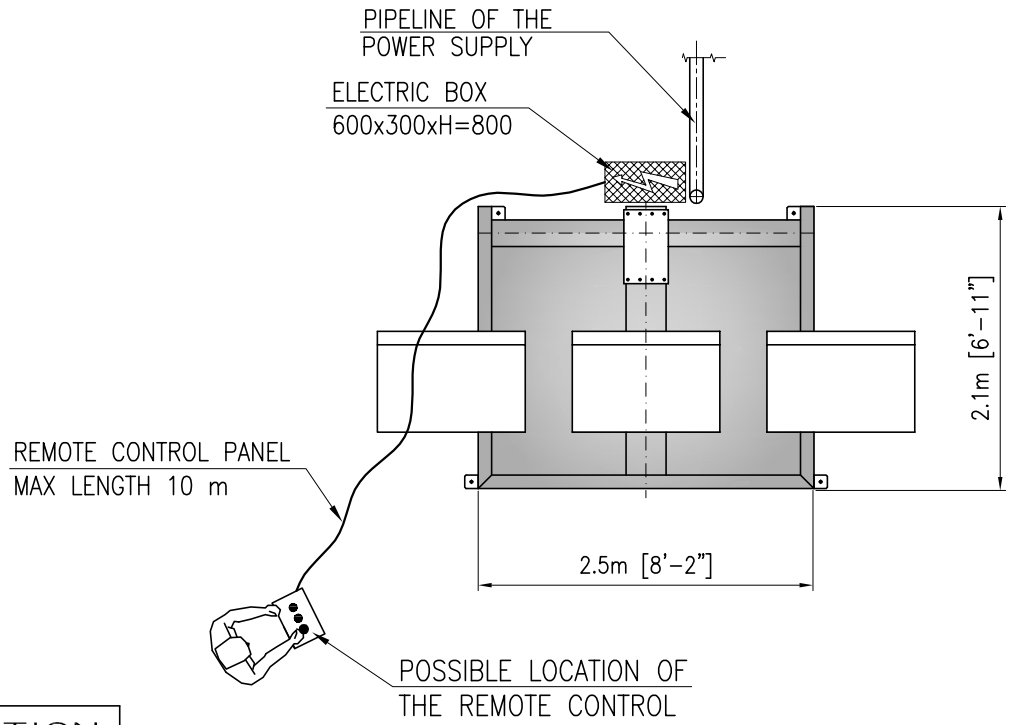

GENERAL INFORMATION		
1	DIMENSIONS (OPERATION AREA)	4.6x2.1m
2	VEHICLES	5
3	NUMBER OF SEATING	20
4	MAXIMUM OPERATIONAL SPEED	4.5 rpm
5	DIRECTION OF ROTATION	Anticlockwise Clockwise
6	CUBAGE	1x20'
7	MOTIVE POWER	2.5 kW
8	LIGHT POWER	3 kW

THE PRESENT DRAWING IS PURELY INDICATIVE, ANY INFORMATION CAN BE MODIFIED WITHOUT PRIOR ADVICE

SBF VISA GROUP
CASALE DI SCODOSIA (PADOVA) ITALY

PROJECT	BIRD HOUSE WHEEL 5
GROUP	GENERAL SCHEME
MODEL	704 – Park Model
MANUFACTURER	SBF-VISA GROUP

DRAWING NO.	RP.704.5M.GS
REV.	01
SCALE	1:50
DATE	04.2016
DRAWN	Nicola C.
CHECKED	//

All rights on the present drawing are reserved to SBF s.r.l. No technical data of from or by any means, without the prior written permission of SBF s.r.l.

13. Merry Go round »¼²Âº»ÄÁº »²ÁÄÂ¶¼º

ⓐ ARRIVAL TRAP FOR THE RIDE FEEDING CABLES

ⓑ TUBE FROM PRINCIPAL LINE

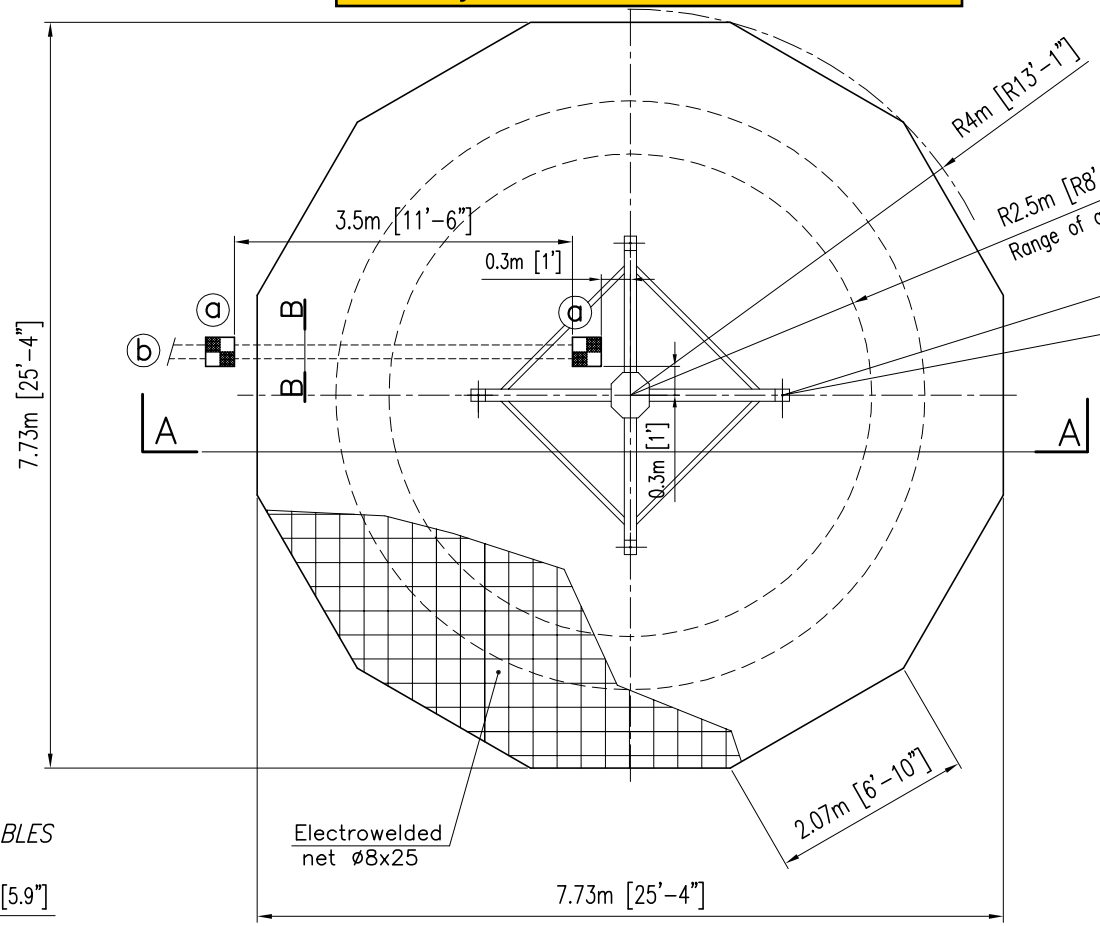

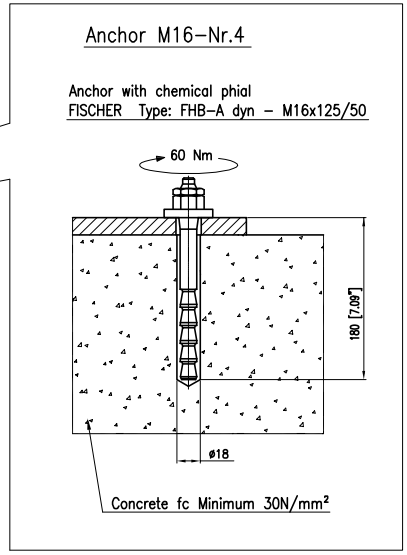

FOR ELECTRIC CABLES

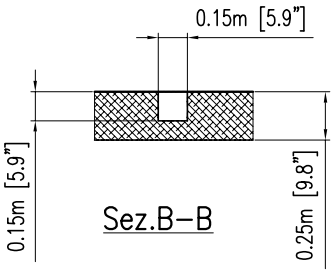

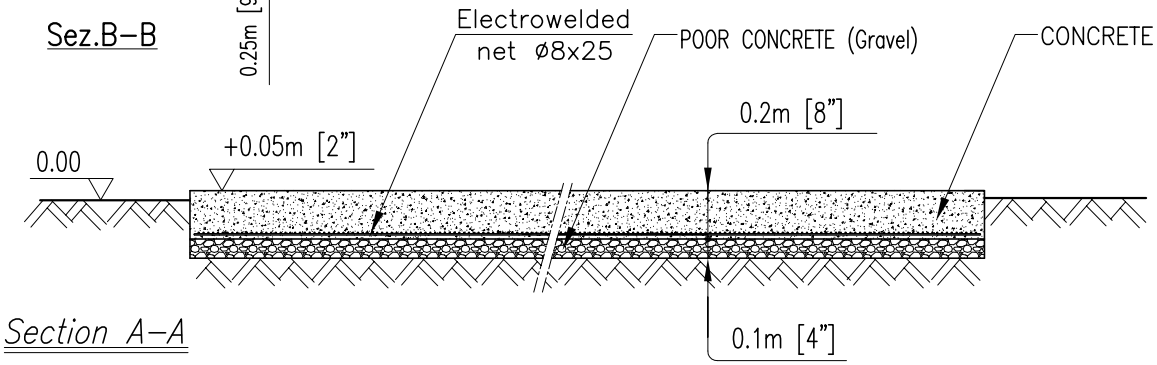

Section A-A

B 450 C (*) - CONCRETE STEEL

CONCRETE FOR FOUNDATION WORKS

POOR CONCRETE (Gravel) Rck≅15 N/mm²

CONCRETE Rck=25 N/mm²

Concept only

N.B.: Foundation is calculated considering a σ =1Kg/cm²
if the soil should have σ <1Kg/cm² (Check with penetration test)
foundation must be modified.

All foundation and construction works are Client's responsibility and must be carried out by the Client in accordance with the soil conditions of the installation site and in accordance with the local regulations.

(*) Mechanical Characteristic: σ_s ≥ 450 MPa σ_m ≥ 540 MPa A ≥ 12%

THE PRESENT DRAWING IS PURELY INDICATIVE, EVERY INFORMATION CAN BE MODIFIED WITHOUT WARNING

SBF VISA GROUP
CASALE DI SCODOSIA (PADOVA) ITALY

PROJECT	MERRY GO ROUND ø5m
GROUP	FOUNDATION
MODEL	166
MANUFACTURER	SBF-VISA GROUP
DRAWING NO.	MG.166.00.FD
REV.	00
SCALE	1:50
DATE	01.2016
DRAWN	Nicola C.
CHECKED	//

All rights on the present drawing are reserved to SBF s.r.l. No technical data of form or by any means, without the prior written permission of SBF s.r.l.

13. Merry Go round »¼²Âº»ÄÁº »²ÁÄÂ¶¼º

Peso totale a vuoto–Tot weight (empty): 3800 kg

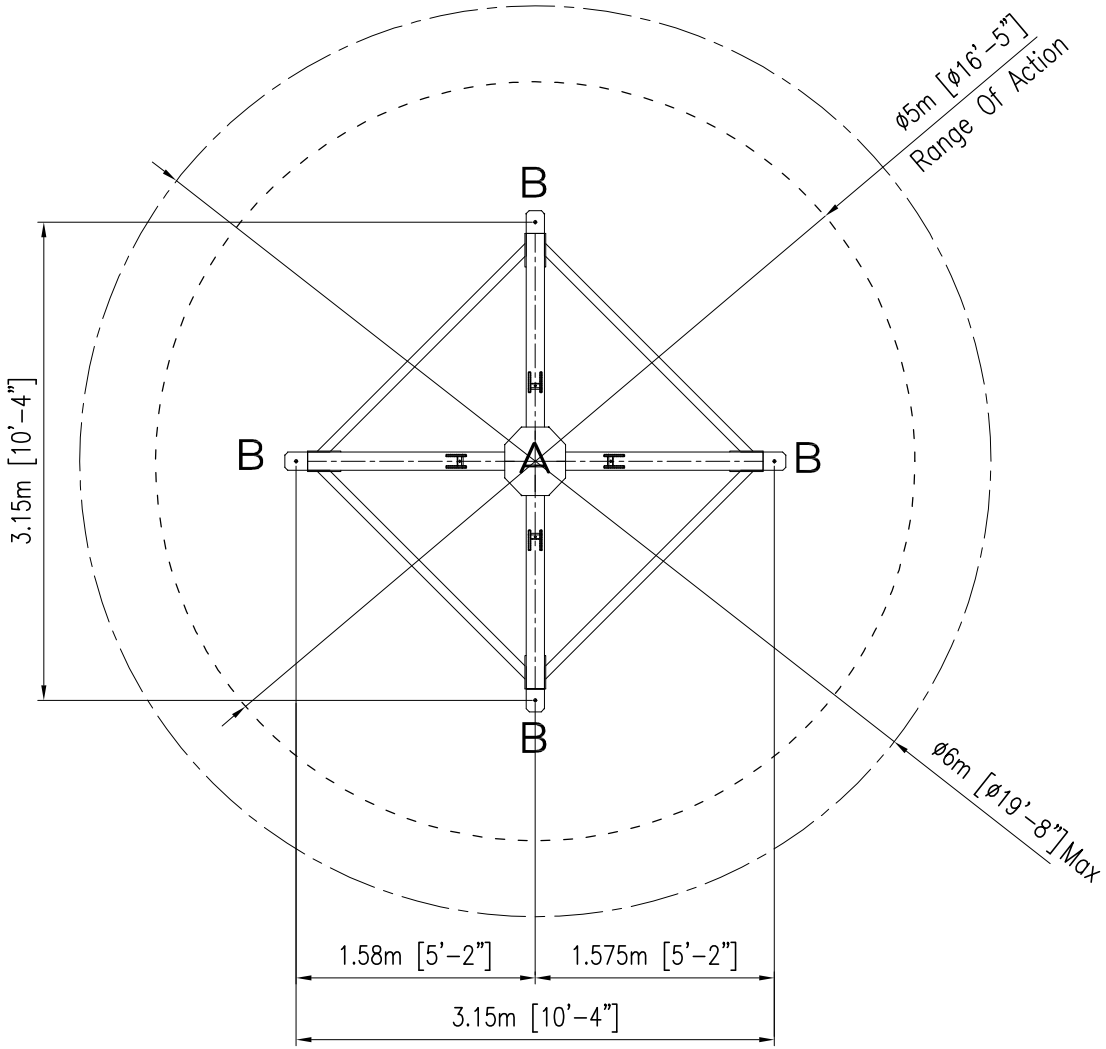

VERTICAL GROUND LOADS

A (Nr.1)	B (Nr.4)
5000 Kg.	400 Kg.

Load On Action's Area: 370Kg/m2

The choice of the place of installation and the installation of the ride is a total responsibility of the Client.
Therefore, especially for installation on floors, pay attention to the ground loads shown on this plan so that the support structure (floor or foundation) is properly sized and suitable, for purpose.
Moreover all foundation and construction works are Client's responsibility and must be carried out by the Client in accordance with the soil condition of the installation site and in accordance with the local regulations.

THE PRESENT DRAWING IS PURELY INDICATIVE, ANY INFORMATION CAN BE MODIFIED WITHOUT PRIOR ADVICE

SBF VISA GROUP
CASALE DI SCODOSIA (PADOVA) ITALY

PROJECT	MERRY GO ROUND 5Mt.
GROUP	GROUND LOADING
SUBGROUP	
MANUFACTURER	SBF-VISA GROUP
DRAWING NO.	MG.166.00.GL
REV.	00
SCALE	1:50
DATE	01.2016
DRAWN	Nicola C.
CHECKED	"

All rights on the present drawing are reserved to SBF s.r.l. No technical data of form or by any means, without the prior written permission of SBF s.r.l.

13. Merry Go round »¼²Âº»ÄÁº »²ÁÄÂ¶¼º

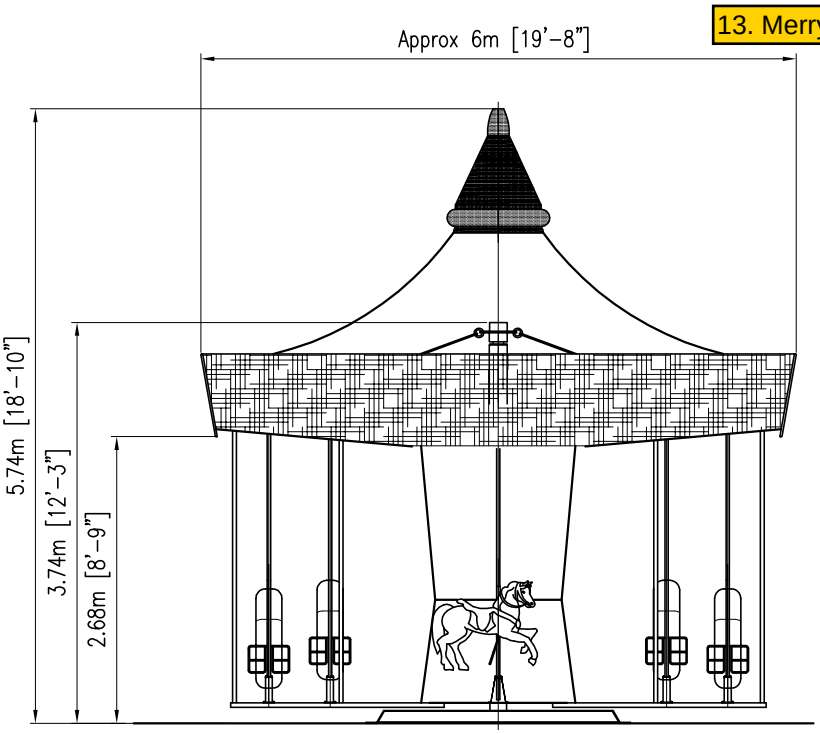

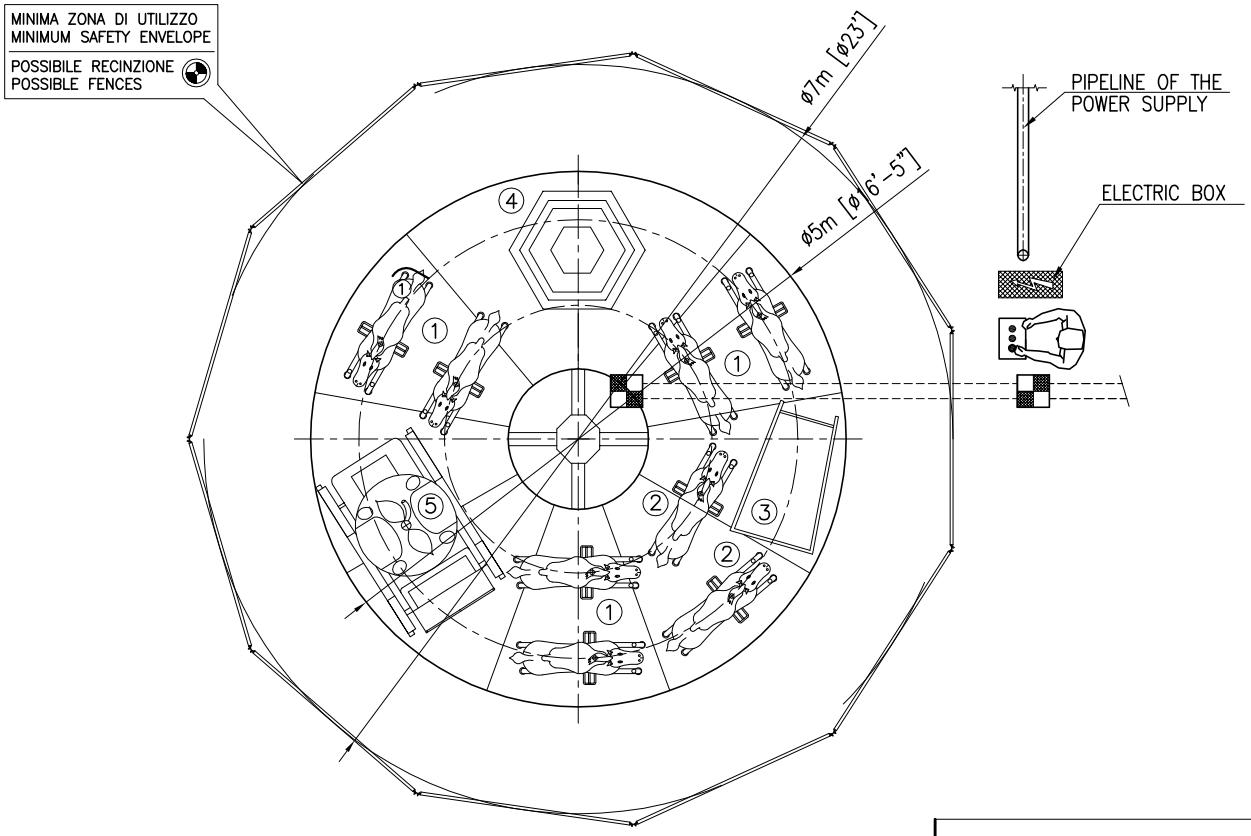

SPECIFICATIONS

Dimensions:	ø5.00 Mt.
Power:	2.5 kW
Light:	5 kW
Hourly capacity:	550
Seating:	20

① N°06 Jumping Horses
② N°02 Rocking Horses
③ N°01 Troika
④ N°01 Spinner or Tea Cups
⑤ N°01 Pumpkin

THE PRESENT DRAWING IS PURELY INDICATIVE, ANY INFORMATION CAN BE MODIFIED WITHOUT PRIOR ADVICE

SBF VISA GROUP
CASALE DI SCODOSIA (PADOVA) ITALY

PROJECT	MERRY GO ROUND ø5m
GROUP	GENERAL SCHEME
MODEL	166
MANUFACTURER	SBF-VISA GROUP
DRAWING NO.	MG.166.00.GS
REV.	00
SCALE	1:50
DATE	01.2016
DRAWN	Nicola C.
CHECKED	/ /

All rights on the present drawing are reserved to SBF s.r.l. No technical data of form or by any means, without the prior written permission of SBF s.r.l.

9. Kangaroo »¶¾´ÄÁÄ

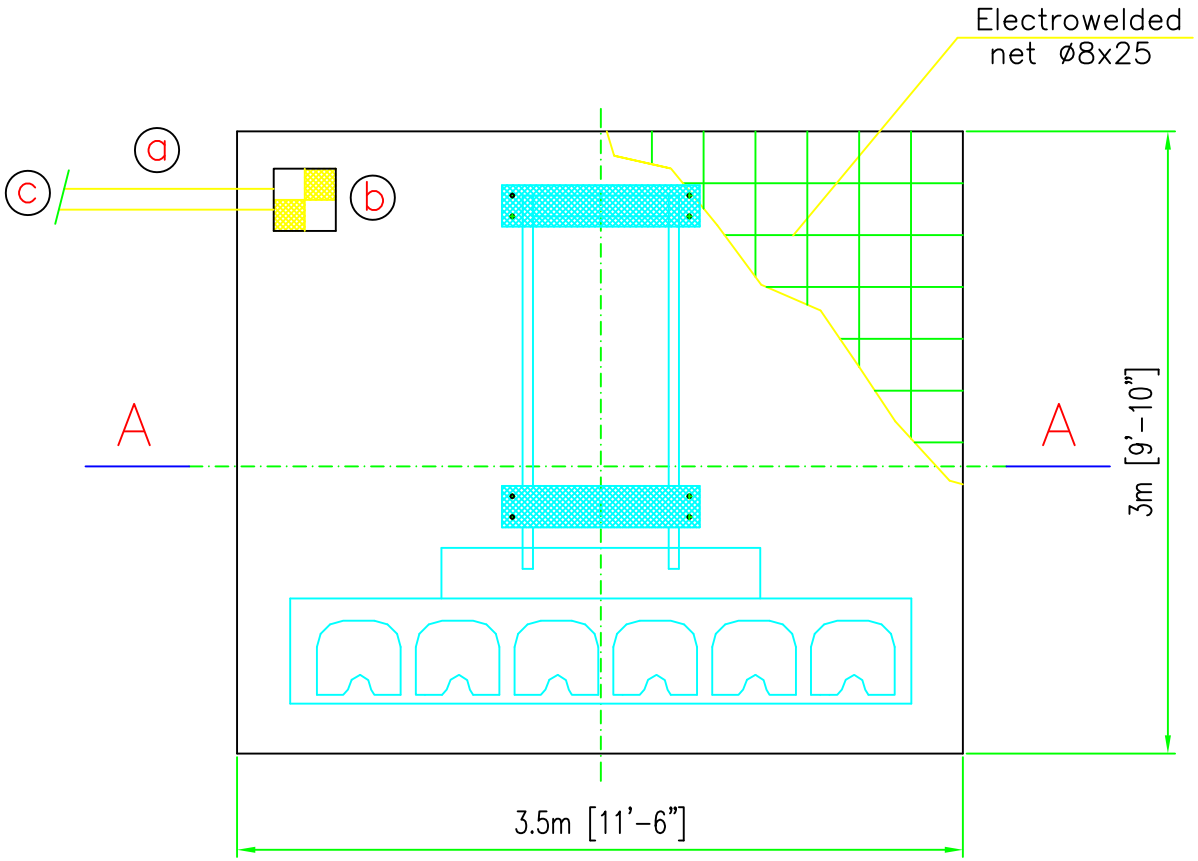

a TUBO ø150mm PER PASSAGGIO CAVI (Sotto Fondazione)
PIPE ø150mm FOR CABLES (Underfoundation)

b POZZETTO D'ARRIVO PER CAVI D'ALIMENTAZIONE GIOSTRA
ARRIVAL TRAP FOR THE RIDE FEEDING CABLES

c TUBO DELLA LINEA PRINCIPALE
PIPE FOR MAINS

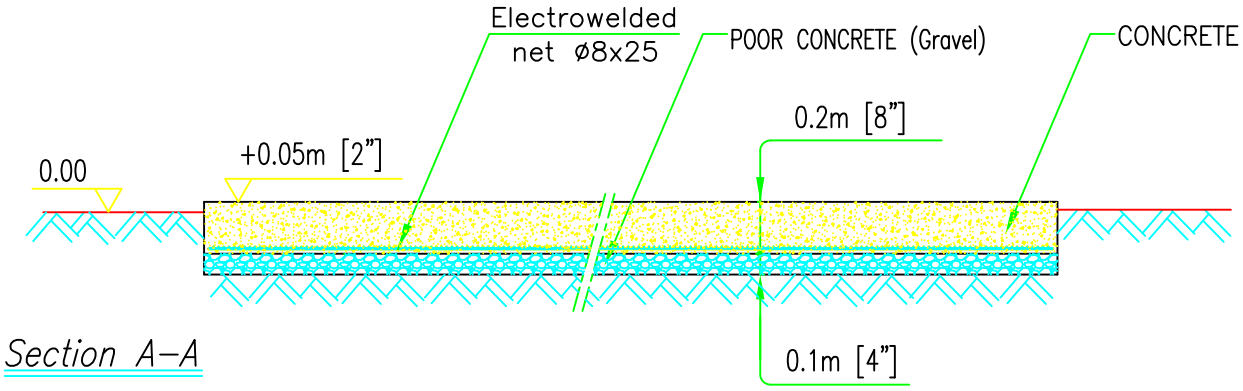

Section A–A

Fe B 44 K (*) – IMPROVED ADHESION STEEL RALLS: Controlled in the factory

CONCRETE FOR FOUNDATION WORKS

POOR CONCRETE (Gravel) Rck≅15 N/mm²

CONCRETE Rck=25 N/mm²

N.B.: Foundation is calculated considering a σ =1Kg/cm²
if the soil should have σ <1Kg/cm² (Check with penetration test)
foundation must be modified.

All foundation and construction works are Client's responsibility and must be carried out by the Client in accordance with the soil conditions of the installation site and in accordance with the local regulations.

(*) Mechanical Characteristic: σ_s ≥ 430 MPa σ_m ≥ 540 MPa A ≥ 12%

THE PRESENT DRAWING IS PURELY INDICATIVE, ANY INFORMATION CAN BE MODIFIED WITHOUT PRIOR ADVICE

SBF VISA GROUP
CASALE DI SCODOSIA (PADOVA) ITALY

PROJECT	SPACE TOWER
GROUP	FOUNDATION
MODEL	Park Model
MANUFACTURER	SBF-VISA GROUP
DRAWING NO.	F.960.7.07.01
REV.	00
SCALE	1:50
DATE	07.2007
DRAWN	Nicola C.
CHECKED	"

All rights on the present drawing are reserved to SBF s.r.l. No technical data of from or by any means, without the prior written permission of SBF s.r.l.

11. Farm Train ½²Ã²Á¶³¶¼º

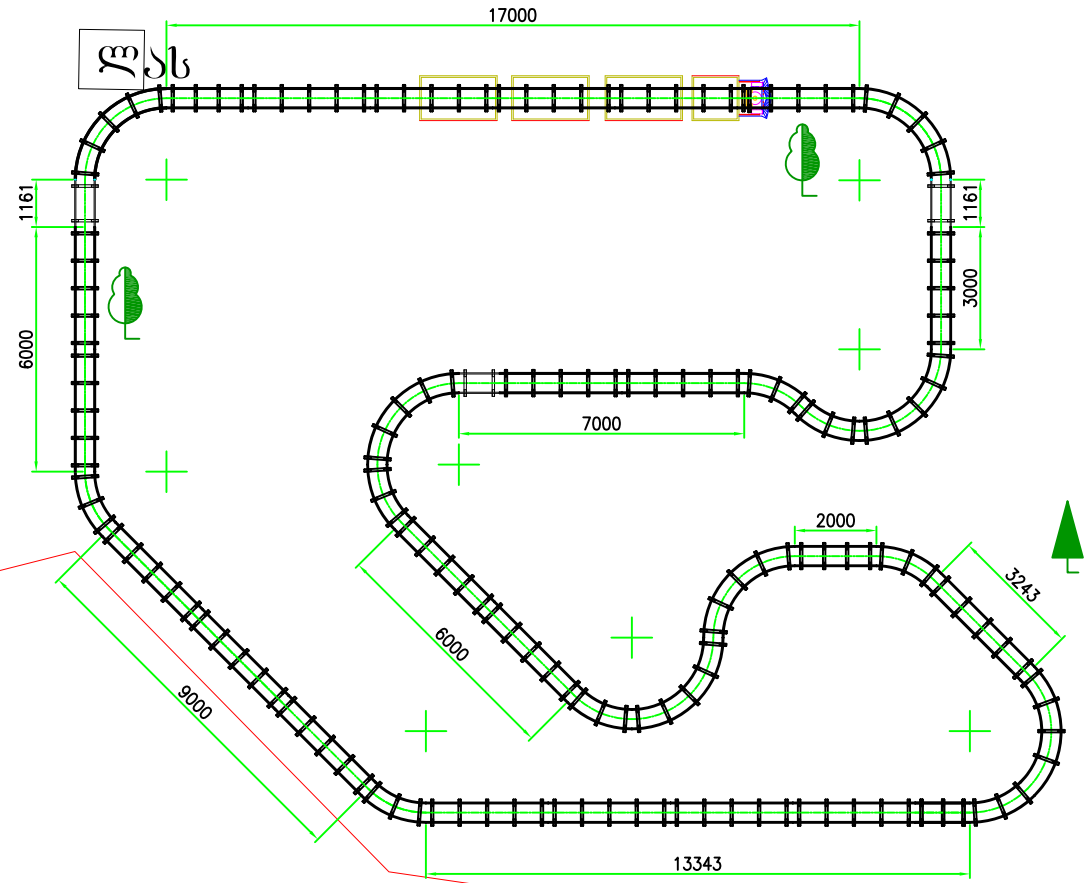

Track Development: ±103.5m

THE PRESENT DRAWING IS PURELY INDICATIVE, ANY INFORMATION CAN BE MODIFIED WITHOUT PRIOR ADVICE

PROJECT	TRAIN 500	DRAWING NO.	P.16.02.05.04
GROUP	PROPOSAL	REV.	01
SUBGROUP		SCALE	1:100
MANUFACTURER	SBF-VISA GROUP	DATE	02.2016
		DRAWN	Nicola C.
		CHECKED	//

SBF VISA GROUP
CASALE DI SCODOSIA (PADOVA) ITALY

All rights on the present drawing are reserved to SBF s.r.l. No technical data of, from or by any means, without the prior written permission of SBF s.r.l.

11. Farm Train ½²Ã²Á¶³¶¼º

SEZIONE A–A

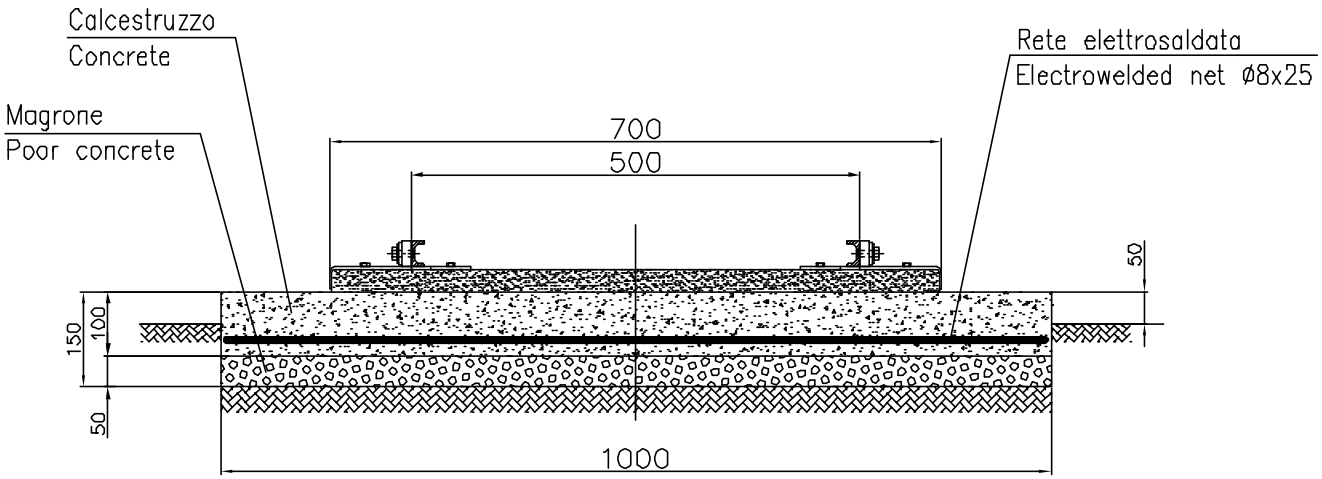

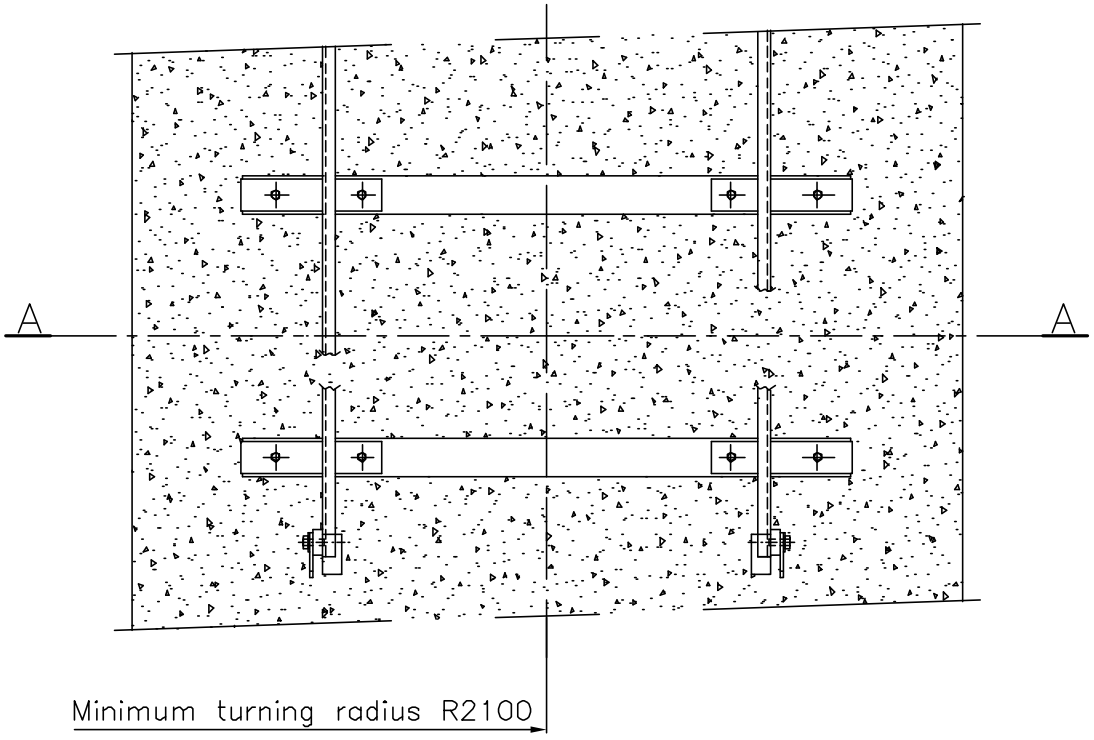

CARICO STATICO DISTRIBUITO STATIC DISTRIBUTED LOAD	350 Kg/mq
CARICO DINAMICO DISTRIBUITO DYNAMIC DISTRIBUTED LOAD	680 Kg/mq

SBF VISA GROUP
CASALE DI SCODOSIA (PADOVA) ITALY

PROJECT: TRAIN 500	DRAWING NO.: C.1.06.18.01
GROUP: GROUND LOADING	REPLACE DRAWING NUMBER:
SUBGROUP:	SCALE:
MANUFACTURER: SBF–VISA GROUP	DATE: Giu.'00
	DR: Nicola C.

All rights on the present drawing are reserved to SBF s.r.l. No technical data of form or by any means, without the prior written permission of SBF s.r.l.

5. Venture River Â²½¿´¸²ÄÁ¿ ½µº¾²Á¶

ⓐ ARRIVAL TRAP FOR THE RIDE FEEDING CABLES

ⓑ TUBE FROM PRINCIPAL LINE

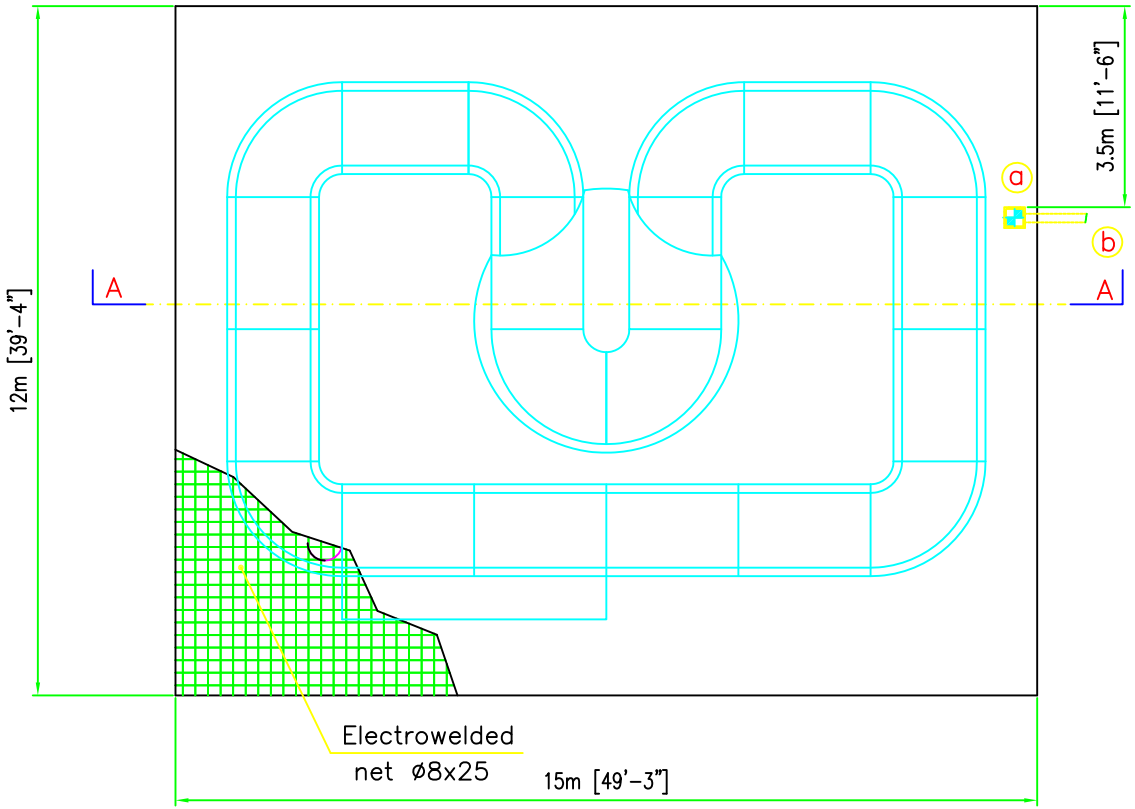

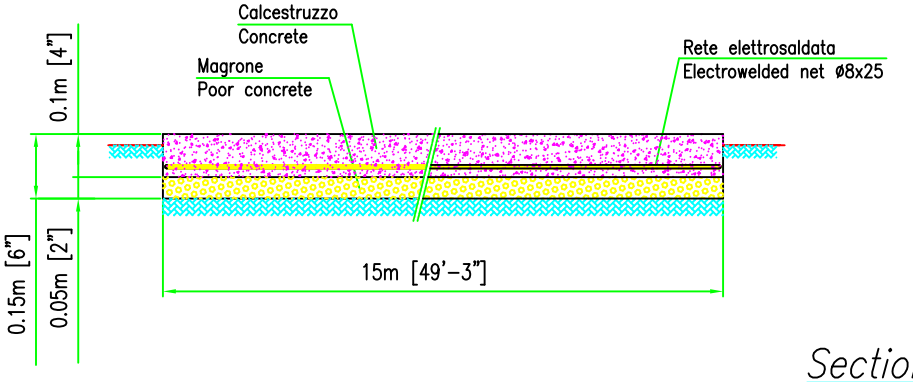

Section A-A

B 450 C (*) – CONCRETE STEEL

CONCRETE FOR FOUNDATION WORKS

POOR CONCRETE (Gravel) Rck≅15 N/mm²

CONCRETE Rck=25 N/mm²

N.B.: Foundation is calculated considering a σ =1Kg/cm²
if the soil should have σ <1Kg/cm² (Check with penetration test)
foundation must be modified.

All foundation and construction works are Client's responsibility and must be carried out by the Client in accordance with the soil conditions of the installation site and in accordance with the local regulations.

(*) Mechanical Characteristic: σ_s ≥450 MPa σ_m ≥540 MPa A≥12%

THE PRESENT DRAWING IS PURELY INDICATIVE, EVERY INFORMATION CAN BE MODIFIED WITHOUT WARNING

SBF VISA GROUP
CASALE DI SCODOSIA (PADOVA) ITALY

PROJECT	VENTURE RIVER
GROUP	FOUNDATION
MODEL	MX55
MANUFACTURER	SBF-VISA GROUP
DRAWING NO.	F.15.01.27.01
REV.	00
SCALE	1:100
DATE	01.2015
DRAWN	Nicola C.
CHECKED	"

All rights on the present drawing are reserved to SBF s.r.l. No technical data of form or by any means, without the prior written permission of SBF s.r.l.

8. Wonder Flight Ì ²µ¿Â¾ÄÁº àÁ¶¾²

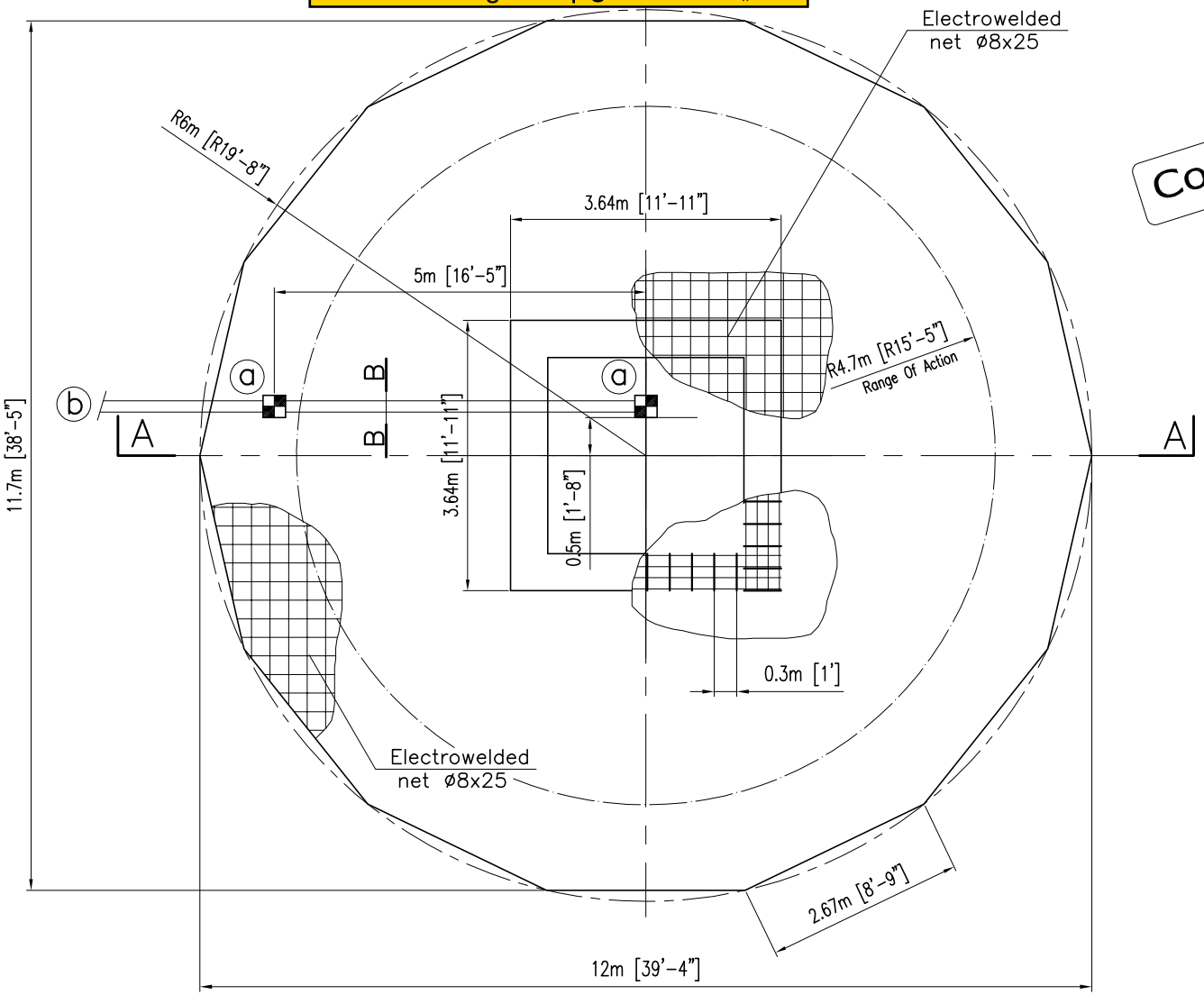

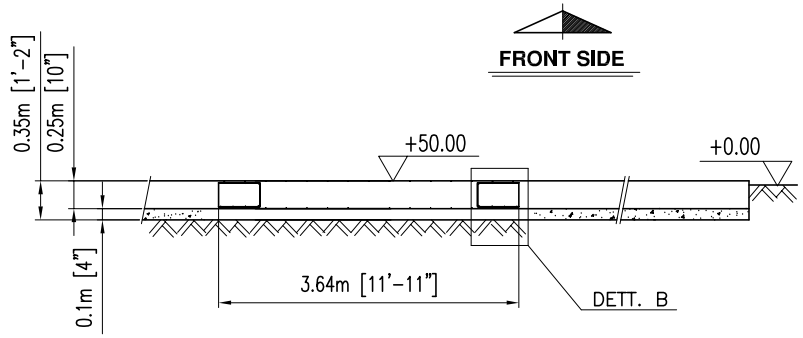

SECTION A–A

ⓐ ARRIVAL TRAP FOR THE RIDE FEEDING CABLES

ⓑ TUBE FROM PRINCIPAL LINE

Concept only

FOR ELECTRIC CABLES

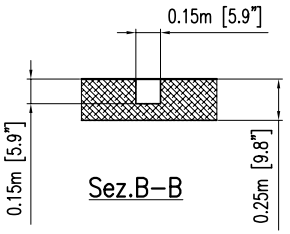

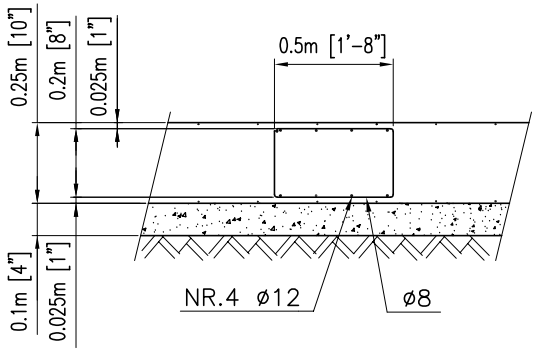

DETT. B

B 450 C (*) – CONCRETE STEEL

CONCRETE FOR FOUNDATION WORKS

POOR CONCRETE (Gravel) Rck≅15 N/mm²

CONCRETE Rck=30 N/mm²

N.B.: Foundation is calculated considering a σ =1Kg/cm²
if the soil should have σ <1Kg/cm² (Check with penetration test)
foundation must be modified.

All foundation and construction works are Client's responsibility and must be carried out by the Client in accordance with the soil conditions of the installation site and in accordance with the local regulations.

(*) Mechanical Characteristic: σ_s ≥450 MPa σ_m ≥540 MPa A ≥12%

THE PRESENT DRAWING IS PURELY INDICATIVE, ANY INFORMATION CAN BE MODIFIED WITHOUT PRIOR ADVICE

SBF VISA GROUP
CASALE DI SCODOSIA (PADOVA) ITALY

PROJECT	WONDER FLIGHT 8
GROUP	FOUNDATION
MODEL	Park Model
MANUFACTURER	SBF-VISA GROUP
DRAWING NO.	SB.399.8B.GL
REV.	01
SCALE	1:50
DATE	04.2016
DRAWN	Nicola C.
CHECKED	"

All rights on the present drawing are reserved to SBF s.r.l. No technical data of from or by any means, without the prior written permission of SBF s.r.l.

8. Wonder Flight Ì ²µ¿Â¾ÄÁº àÁ¶¾²

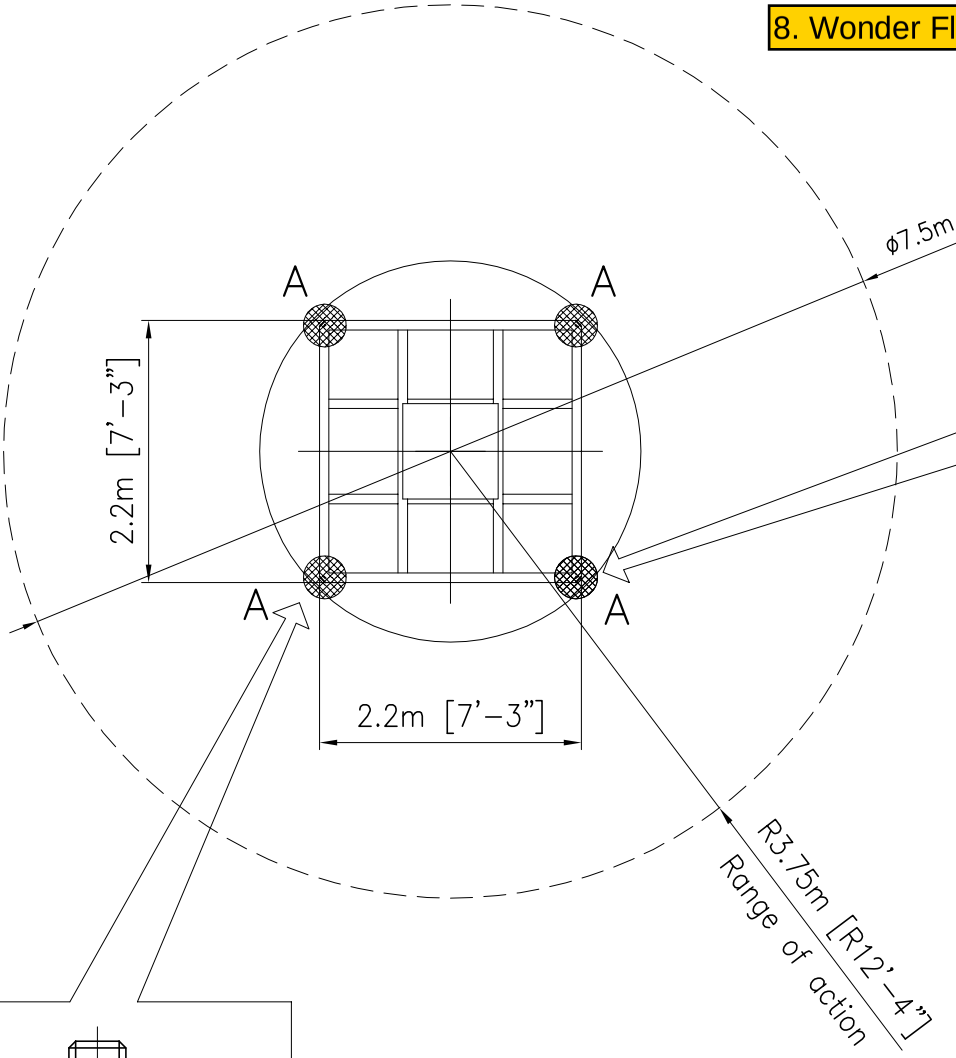

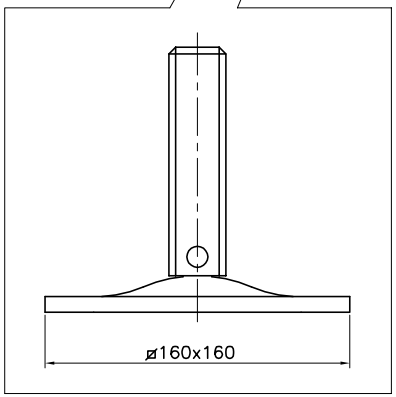

Anchor M16-Nr.8

Anchor with chemical phial
FISCHER Type: FHB-A dyn - M16x125/50

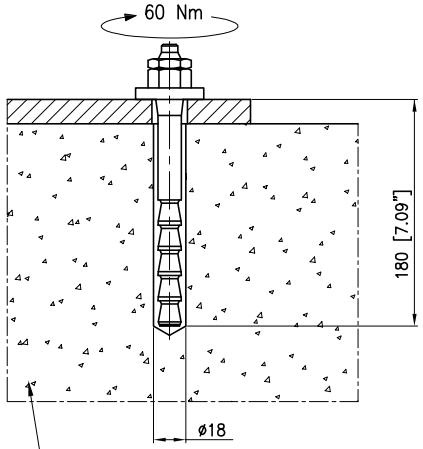

LOAD INFORMATION		
1	TOTAL RIDE WEIGHT	4200 Kg.
2	SUPPORT ON THE FLOOR:	Nr. 8
3	STATIC LOAD (A)	1050 Kg.
4	DYNAMIC LOAD (A)	1350 Kg.
5	LOAD ON ACTION'S AREA	450 Kg/m2

The choice of the place of installation and the installation of the ride is a total responsibility of the Client.
Therefore, especially for installation on floors, pay attention to the ground loads shown on this plan so that the support structure (floor or foundation) is properly sized and suitable, for purpose.
Moreover all foundation and construction works are Client's responsibility and must be carried out by the Client in accordance with the soil condition of the installation site and in accordance with the local regulations.

THE PRESENT DRAWING IS PURELY INDICATIVE, ANY INFORMATION CAN BE MODIFIED WITHOUT PRIOR ADVICE

SBF VISA GROUP
CASALE DI SCODOSIA (PADOVA) ITALY

PROJECT	WONDER FLIGHT
GROUP	GENERAL SCHEME
MODEL	000 - Park Model
MANUFACTURER	SBF-VISA GROUP

DRAWING NO.	SB.399.8B.GL	REV. 01
SCALE	1:50	
DATE	04.2016	
DRAWN	Nicola C.	
CHECKED	"	

All rights on the present drawing are reserved to SBF s.r.l. No technical data of from or by any means, without the prior written permission of SBF s.r.l.

8. Wonder Flight Ì ²µ¿Â¾ÄÁº àÁ¶¾²

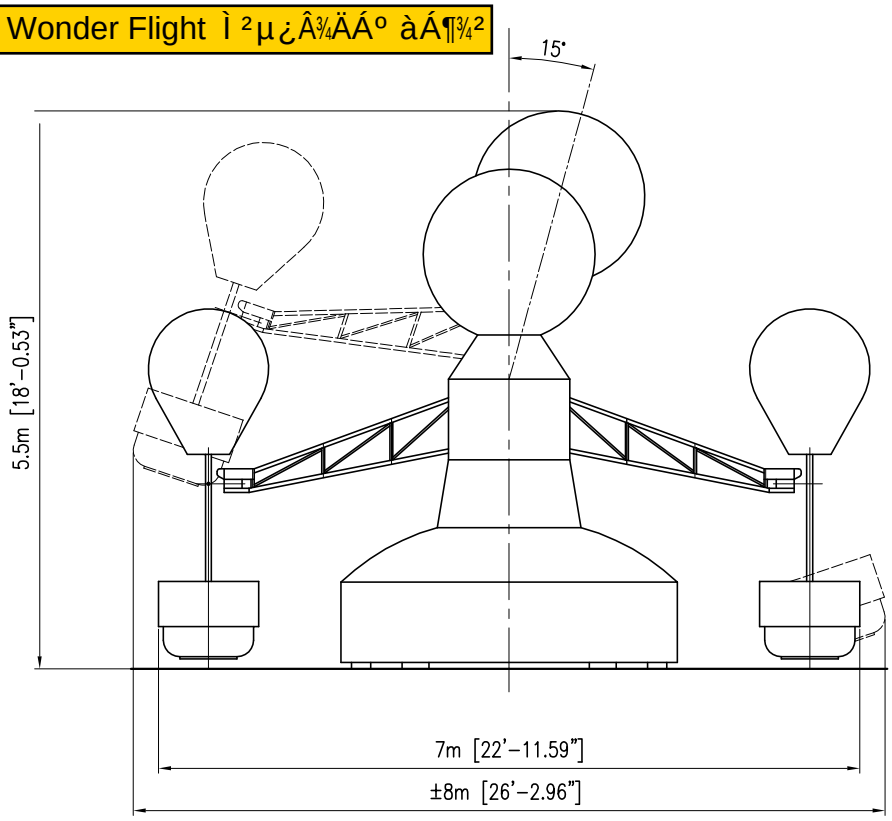

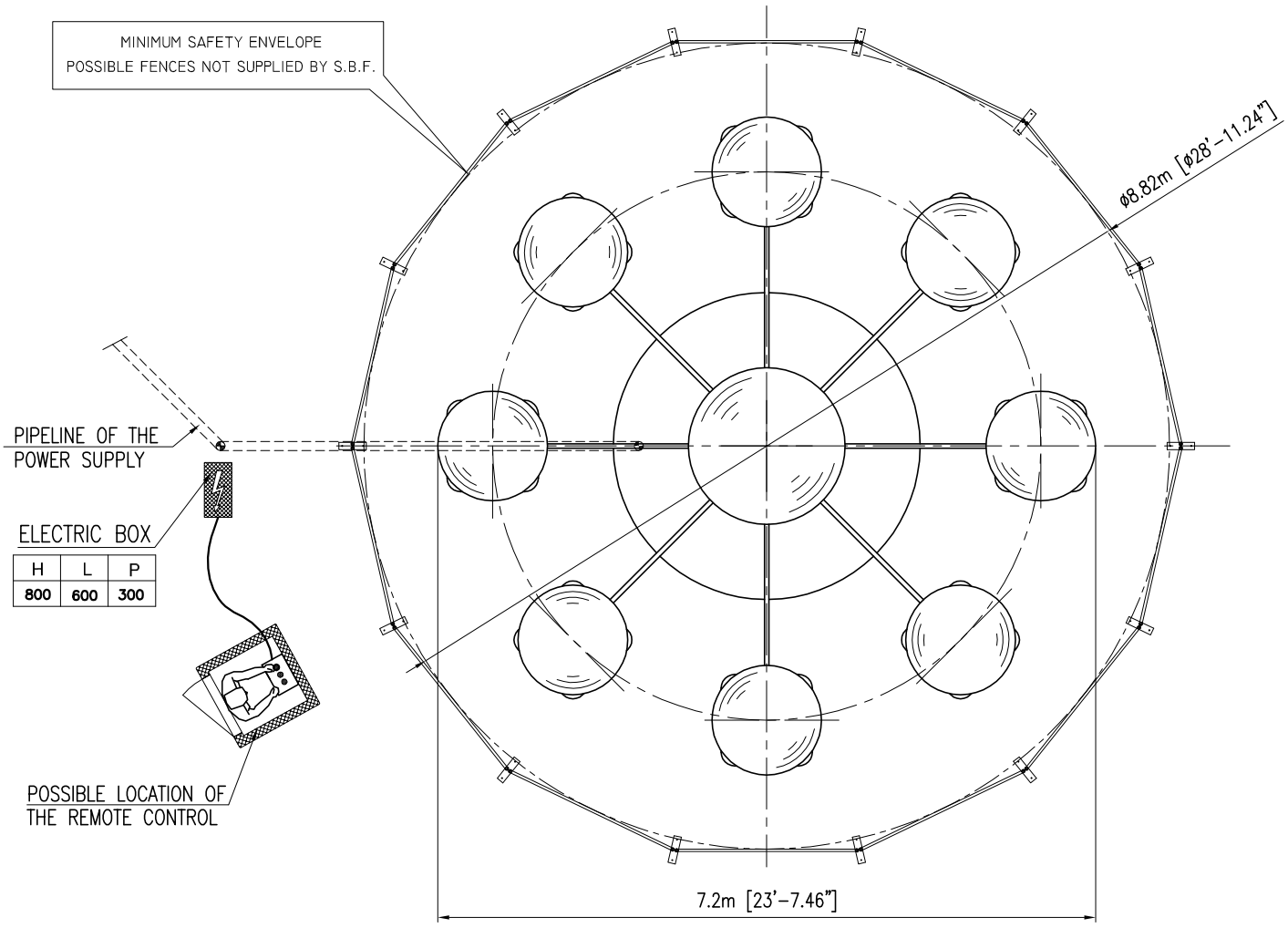

GENERAL INFORMATION					
1	DIMENSIONS (OPERATION AREA)	Ø±8.0xH=5.5m	5	MOTIVE POWER	4.4 kW
2	VEHICLES	8	6	LIGHT POWER	6 kW
3	NUMBER OF SEATING	32	7	OTHER POWER	1.5 kW
4	TOTAL RIDE WEIGHT	4175 Kg.	8	TOTAL POWER	11.9 kW

THE PRESENT DRAWING IS PURELY INDICATIVE, ANY INFORMATION CAN BE MODIFIED WITHOUT PRIOR ADVICE

SBF VISA GROUP
CASALE DI SCODOSIA (PADOVA) ITALY

PROJECT	WONDER FLIGHT 8
GROUP	GENERAL SCHEME
MODEL	399 – Park Model
MANUFACTURER	SBF-VISA GROUP
DRAWING NO.	SB.399.8B.GS
REV.	01
SCALE	1:50
DATE	01.2016
DRAWN	Nicola C.
CHECKED	"

All rights on the present drawing are reserved to SBF s.r.l. No technical data of from or by any means, without the prior written permission of SBF s.r.l.

7. Trampoline ³²ÃÄÃº

foundation of Tramp lining

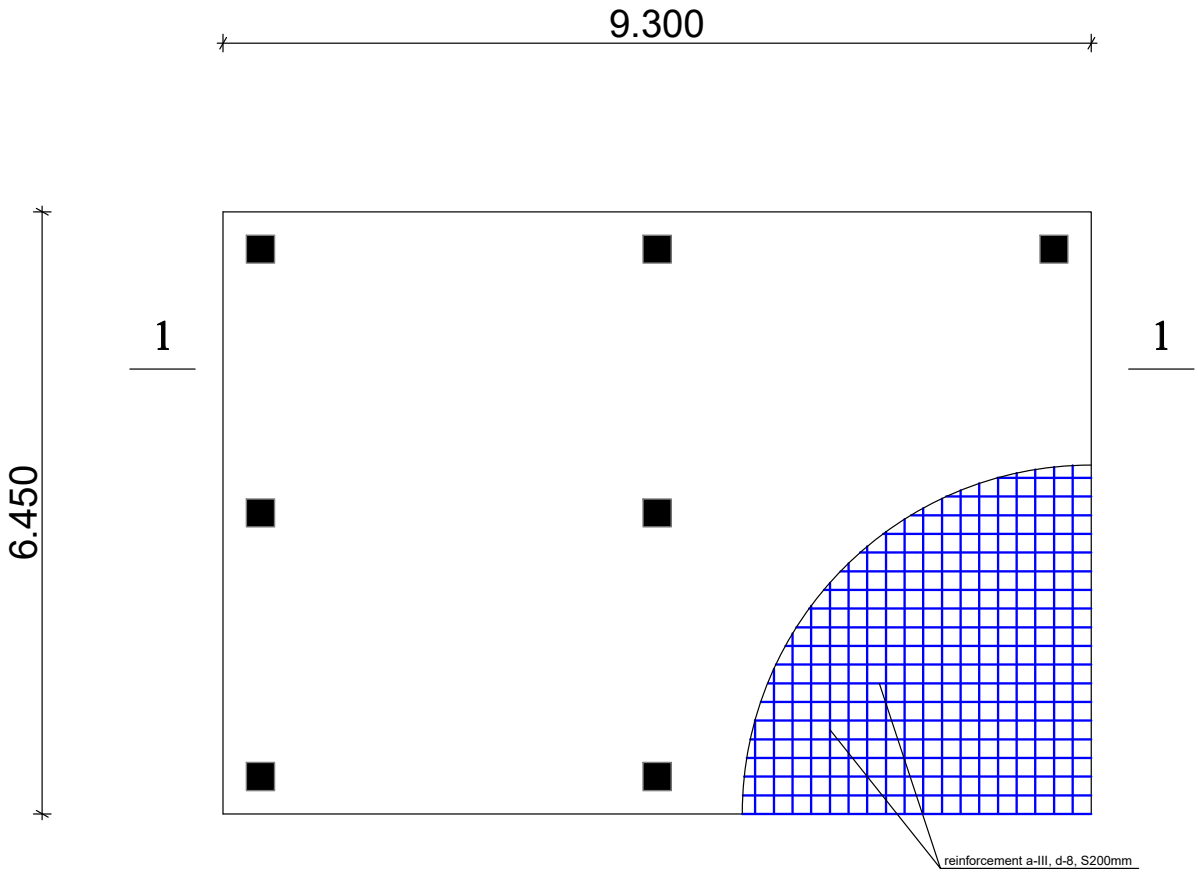

1 - 1

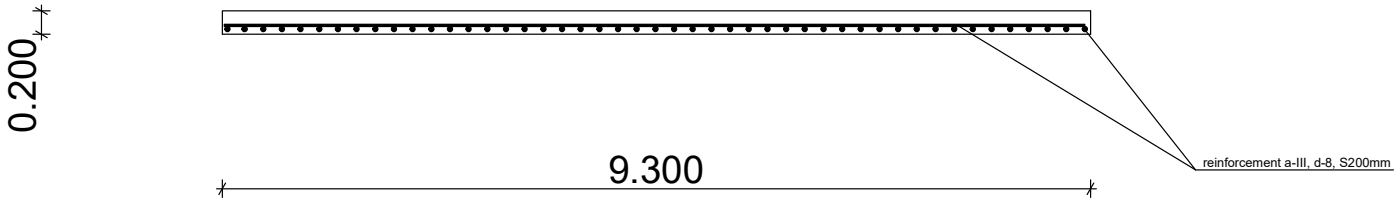

B 450 C (*) – CONCRETE STEEL

CONCRETE FOR FOUNDATION WORKS

POOR CONCRETE (Gravel) Rck≅15 N/mm²

CONCRETE Rck=30 N/mm²

N.B.: Foundation is calculated considering a σ =1Kg/cm²
if the soil should have σ <1Kg/cm² (Check with penetration test)
foundation must be modified.

All foundation and construction works are Client's responsibility and must be carried out by the Client in accordance with the soil conditions of the installation site and in accordance with the local regulations.

(*) Mechanical Characteristic: σ_s ≥ 450 MPa σ_m ≥ 540 MPa A ≥ 12%

THE PRESENT DRAWING IS PURELY INDICATIVE, ANY INFORMATION CAN BE MODIFIED WITHOUT PRIOR ADVICE

SBF VISA GROUP CASALE DI SCODOSIA (PADOVA) ITALY	PROJECT	DRAWING NO.	REV.
		RP.704.5M.FD	02
	GROUP: FOUNDATION	SCALE: 1:50	
	MODEL: Park Model	DATE: 04.2016	
	MANUFACTURER: SBF-VISA GROUP	DRAWN: Nicola C.	
		CHECKED: "	

All rights on the present drawing are reserved to SBF s.r.l. No technical data of them or by any means, without the prior written permission of SBF s.r.l.

10. Happy Wheel ½Ë°²ÁÄ¼° ³¿Á³²1¼°

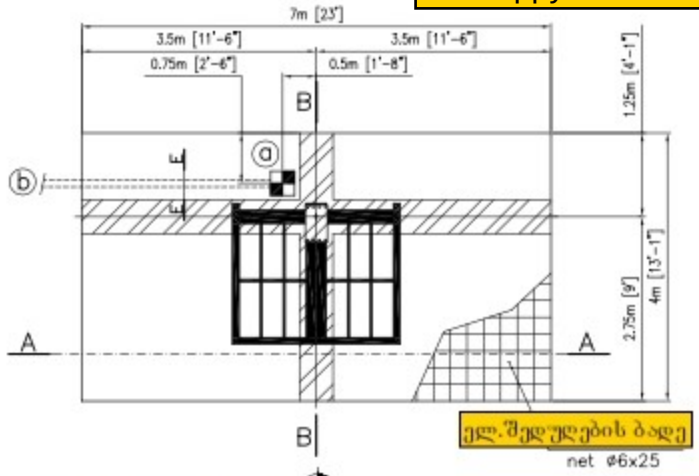

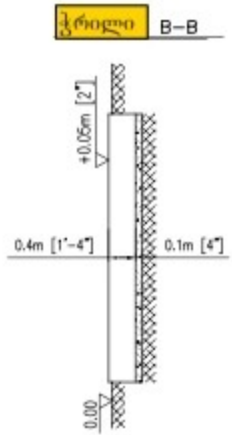

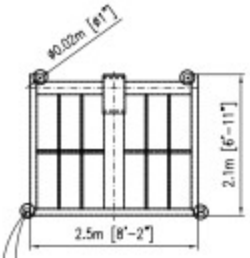

ანკერი

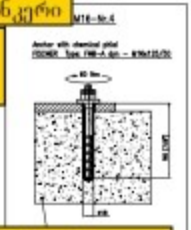

ბეტონის მინიმალური საკომპრესიო ძალა 30 ნ/მმ2

ქიმიური ანკერი ტიპის FISCHER-ის წარმოების, ტიპი: FHB-A dyn - M16 x 125/50

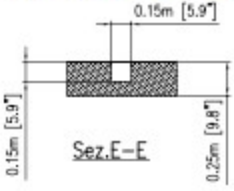

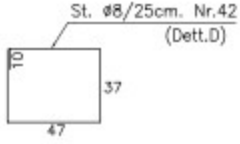

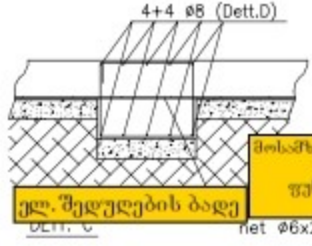

B 450 C (*) – რკინაბეტონი

ბეტონი ფუნდამენტის სამუშაოებისთვის

მოსამზადებელი ფენა (ღორღი) საკომპ. ძალა = 15 ნ/მმ2
ბეტონი საკომპრესიო ძალა = 30 ნ/მმ2
ფუნდამენტი გამოთვლილია შემდეგი ფორმულით:

Concept only

ნაგებობის სიმკვრივე არის $\sigma < 1 Kg/cm^2$

$\sigma = 1 Kg/cm^2$

შემოწმდეს შედუღების ქვსტი

მიწის ფუნდამენტის მოდელირება

სამუშაოების შესრულების ხარისხი პასუხისმგებელი პირი შემოწმებულებელი.
სამუშაოების ჩატარება უნდა მოხდეს არსებული კონტრაქტის და პირობებიდან გამომდინარე.

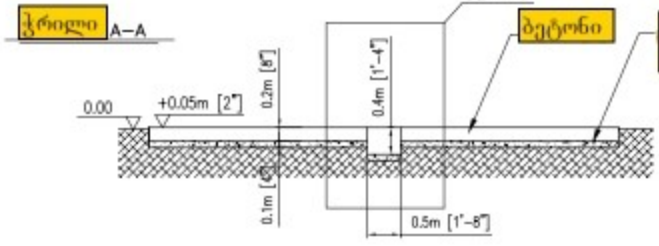

ბეტონის ნაზარდის მახასიათებლები $\sigma_b \geq 450$ MPa $\sigma_m \geq 540$ MPa $A \geq 12\%$

კედის საკაბელო ჭა

a მთავარი ძაბვის ჩაზიდან გამომავალი მილი

b

THE PRESENT DRAWING IS PURELY INDICATIVE, ANY INFORMATION CAN BE MODIFIED WITHOUT PRIOR ADVICE

PROJECT	BALLOON WHEEL 5
GROUP	FOUNDATION
MODEL	Park Model
MANUFACTURER	SBF-VISA GROUP
DRAWING NO.	RP.704.5M.FD
REV.	02
SCALE	1:50
DATE	04.2016
DRAWN	Nicola C.
CHECKED	

SBF VISA GROUP
OSSALE DI SCODOSIA (PADOVA) ITALY

All rights on the present drawing are reserved to SBF s.r.l. No technical data of from or by any means, without the prior written permission of SBF s.r.l.

8. Whonder Wheel Ì ²µ¿Â¾ÄÁº àÁ¶¾²

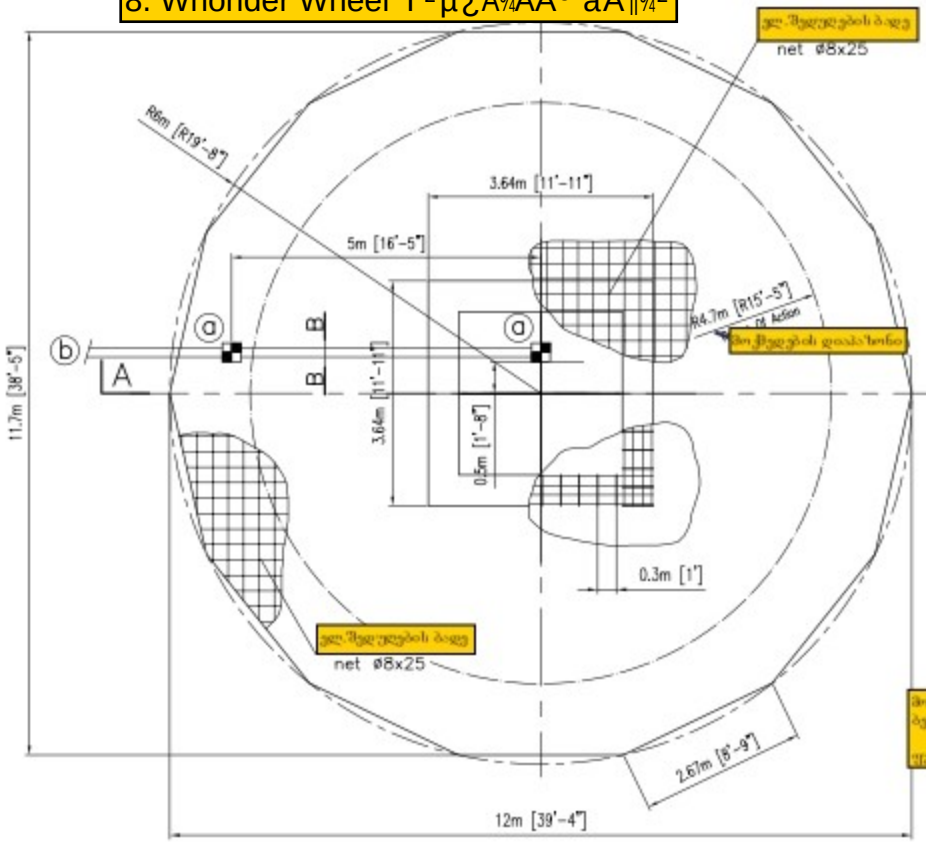

Concept only

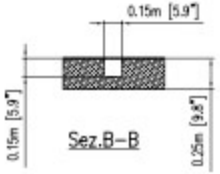

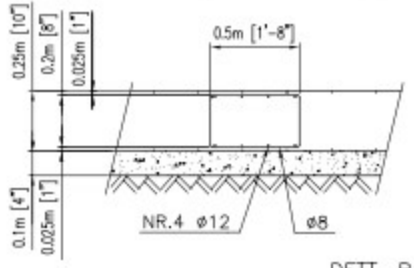

DETT. B

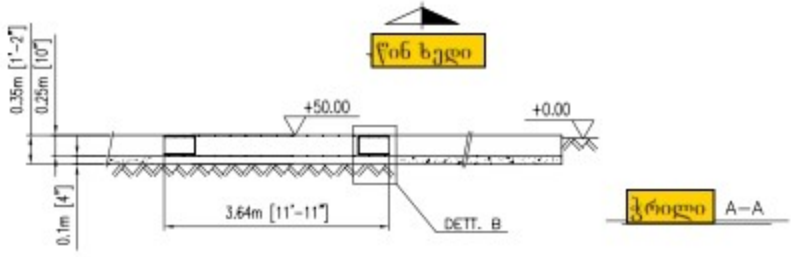

PROJECT	WONDER FLIGHT 8	DRAWING NO.	SB.399.8B.GL
		REV.	01
GROUP	FOUNDATION	SCALE	1:50
		DATE	04.2016
MODEL	Park Model	DRAWN	Nicola C.
MANUFACTURER	SBF-VISA GROUP	CHECKED	"

THE PRESENT DRAWING IS PURELY INDICATIVE, ANY INFORMATION CAN BE MODIFIED WITHOUT PRIOR ADVICE

VISA GROUP
CASALE DI SCODOSIA (PADOVA) ITALY

All rights on the present drawing are reserved to SBF s.r.l. No technical data of from or by any means, without the prior written permission of SBF s.r.l.

8. Wonder Flight Ì ²µ¿Â¾ÄÁº àÁ¶¾²

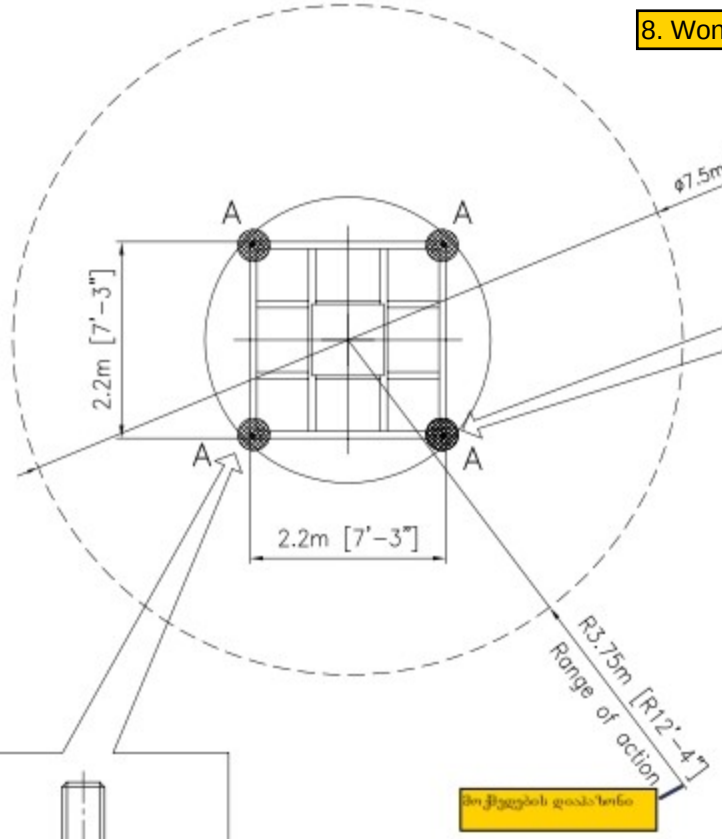

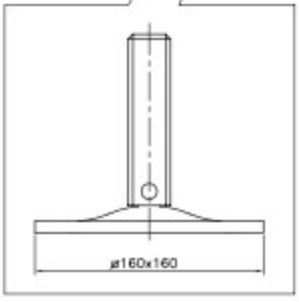

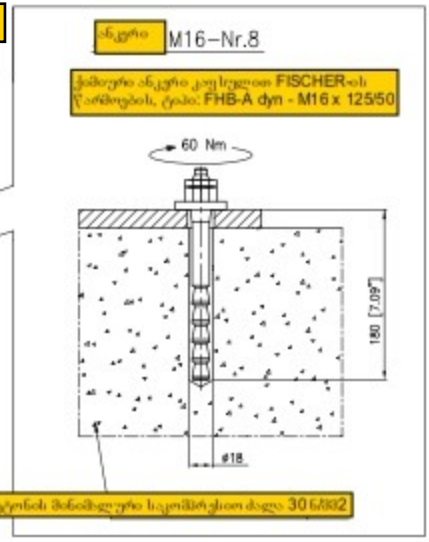

ინფორმაცია დატვირთვის შესახებ	
სველის საერთო წონა GHT	4200 Kg.
ძირზე დამჭერების რაოდენობა	Nr. 8
სტატიკური დატვირთვა (A)	1050 Kg.
დინამიკური დატვირთვა(A)	1350 Kg.
დატვირთვა ოპერაციულ არეალზე	450 Kg/m2

The choice of the place of installation and the installation of the ride is a total responsibility of the Client.
Therefore, especially for installation on floors, pay attention to the ground loads shown on this plan so that the support structure (floor or foundation) is properly sized and suitable, for purpose.
Moreover all foundation and construction works are Client's responsibility and must be carried out by the Client in accordance with the soil condition of the installation site and in accordance with the local regulations.

THE PRESENT DRAWING IS PURELY INDICATIVE, ANY INFORMATION CAN BE MODIFIED WITHOUT PRIOR ADVICE

SBF VISA GROUP
CASALE DI SCODOSIA (PADOVA) ITALY

PROJECT	WONDER FLIGHT	DRAWING NO.	SB.399.8B.GL
		REV.	01
GROUP	GENERAL SCHEME	SCALE	1:50
MODEL	000 – Park Model	DATE	04.2016
		DRAWN	Nicola C.
MANUFACTURER	SBF-VISA GROUP	CHECKED	"

All rights on the present drawing are reserved to SBF s.r.l. No technical data of from or by any means, without the prior written permission of SBF s.r.l.

8. Wonder Flight Ì ²µ¿Â¾ÄÁº àÁ¶¾²

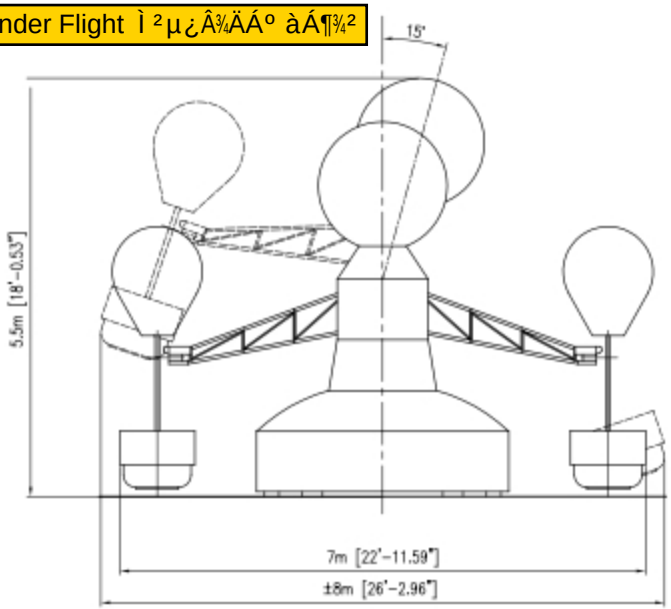

მინიმალური უსაფრთხოების არეალი შემოღობვით

მილსადენი ელ.ენერგიის მისაწოდებლად

PIPELINE OF THE POWER SUPPLY

ელ. ყუთი

H	L	P
800	600	300

დისტანციური კონტროლი მისი შესაძლო მდებარეობა

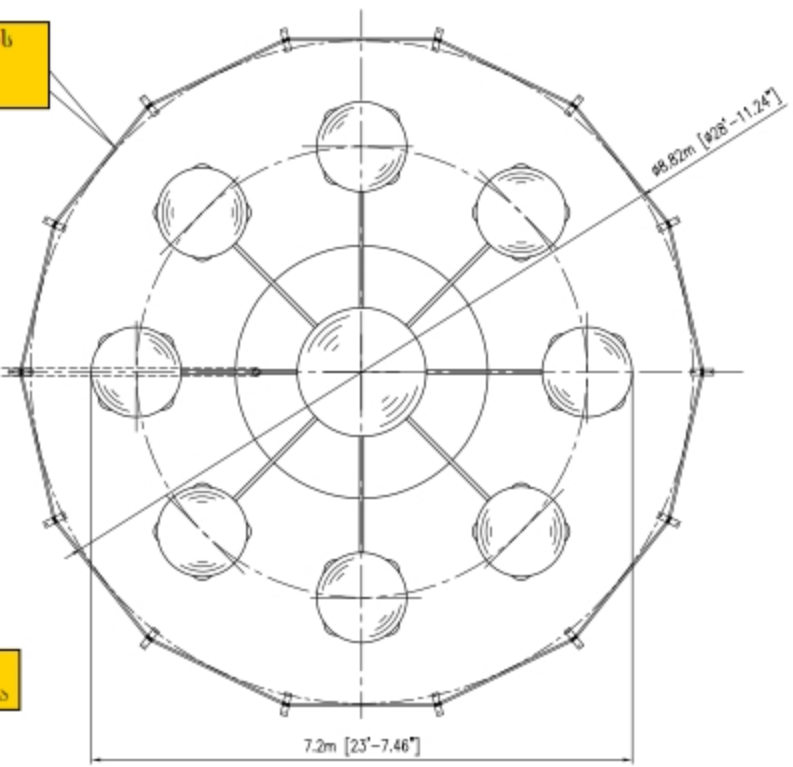

ძირითადი ინფორმაცია

GENERAL INFOR

ოპერატორული არეალის ზომები	Ø±8,0xH=5,5m	მამოძრავებელი ელ. ენერგია	4.4 kW
მგზავრები	8	განათების ელ.ენერგია	6 kW
ადგილების რაოდენობა	32	სხვა ელ.ენერგია	1,5 kW
სველის საერთო წონა	4175 Kg	საერთო ელ.ენერგია	11.9 kW

THE PRESENT DRAWING IS PURELY INDICATIVE, ANY INFORMATION CAN BE MODIFIED WITHOUT PRIOR ADVICE

PROJECT	WONDER FLIGHT 8
GROUP	GENERAL SCHEME
MODEL	399 – Park Model
MANUFACTURER	SBF-VISA GROUP
DRAWING NO.	SB.399.88.GS 01
SCALE	1:50
DATE	01.2016
DRAWN	Nicola C.
CHECKED	"

All rights on the present drawing are reserved to SBF s.r.l. Its technical data or lines or by any means, without the prior written permission of SBF s.r.l.

5. Venture River Â²½¿´¸²ÄÁ¿ ½µº¾²Á¶

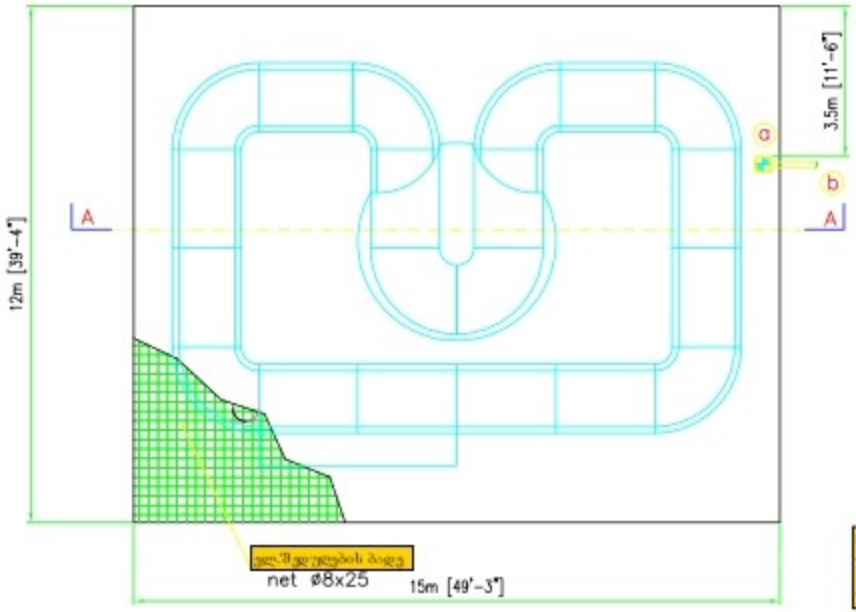

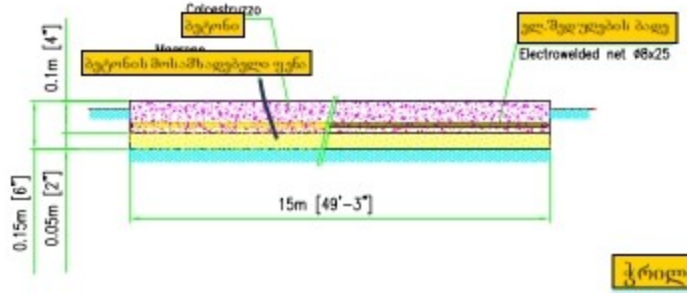

ჭრილი A–A

a FEEDING CABLES

b

B 450 C (*) –

σ =1Kg/cm²

σ <1Kg/cm²

$\sigma_s \geq 450$ MPa $\sigma_m \geq 540$ MPa A ≥ 12%

THE PRESENT DRAWING IS PURELY INDICATIVE, EVERY INFORMATION CAN BE MODIFIED WITHOUT WARNING

PROJECT	VENTURE RIVER
GROUP	FOUNDATION
MODEL	MX55
MANUFACTURER	SBF-VISA GROUP
DRAWING NO.	F.15.01.27.01
REV.	00
SCALE	1:100
DATE	01.2015
DRAWN	Nicola C.
CHECKED	"

All rights on the present drawing are reserved to SBF s.r.l. No additional sales of these or to any means, without the prior written permission of SBF s.r.l.

11. Farm Train ½²Ã²Á¶³¶¼º

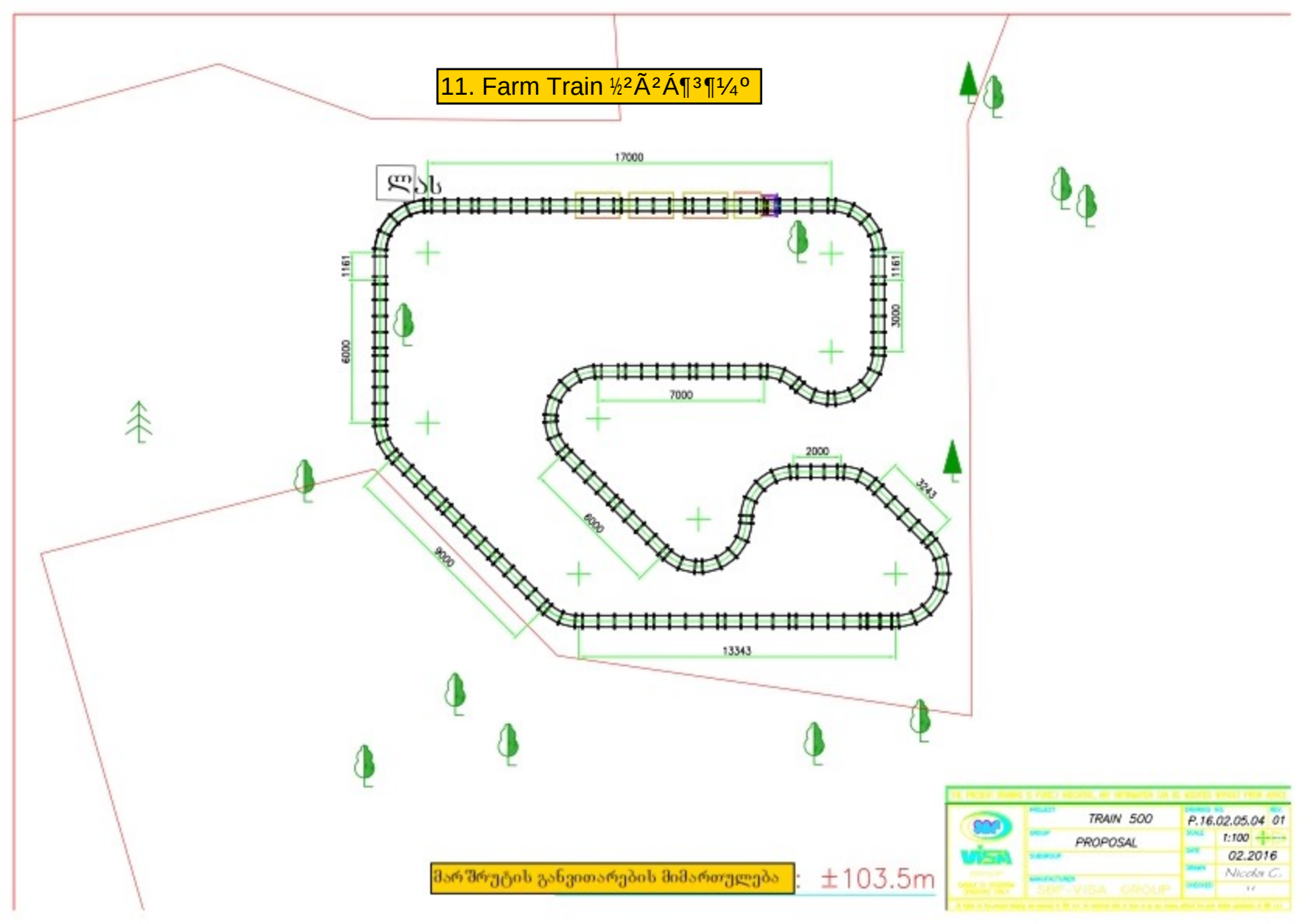

11. Farm Train ½²Ã²Á¶³¶¼º

ჭრილი A–A

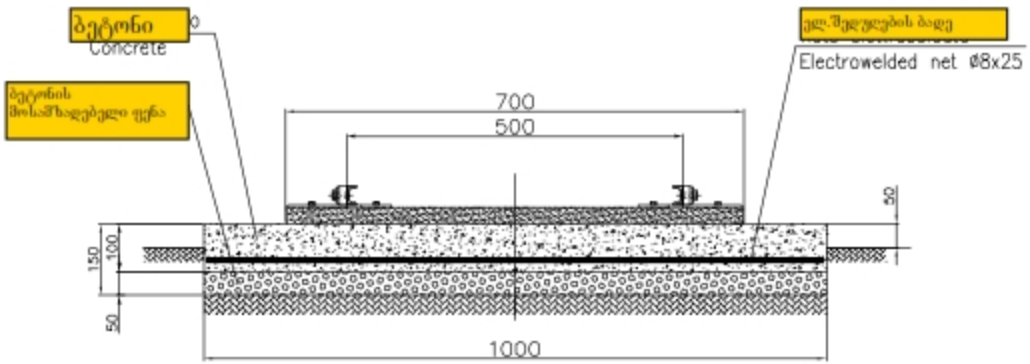

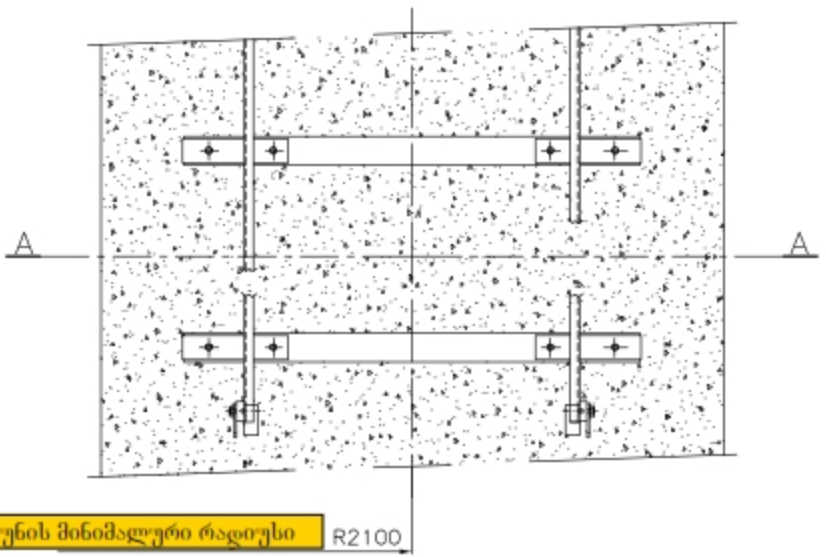

ბრუნის მინიმალური რადიუსი R2100

სტატიკური გამანაწილებელი დატვირთვა	350 Kg/mq
დინამიკური გამანაწილებელი დატვირთვა	680 Kg/mq

SBF VISA GROUP CASALE DI SCODOSIA (PADOVA) ITALY	PROJECT: TRAIN 500	DRAWING NO.: C.1.06.18.01
	GROUP: GROUND LOADING	REPLACE DRAWING NUMBER
	SUBGROUP	SCALE
	MANUFACTURER: SBF–VISA GROUP	DATE: Giu.'00
		DR: Nicola C.

All rights on the present drawing are reserved to SBF s.r.l. No technical data of form or by any means, without the prior written permission of SBF s.r.l.

9. Kangaroo »¶¾´ ÄÁÄ

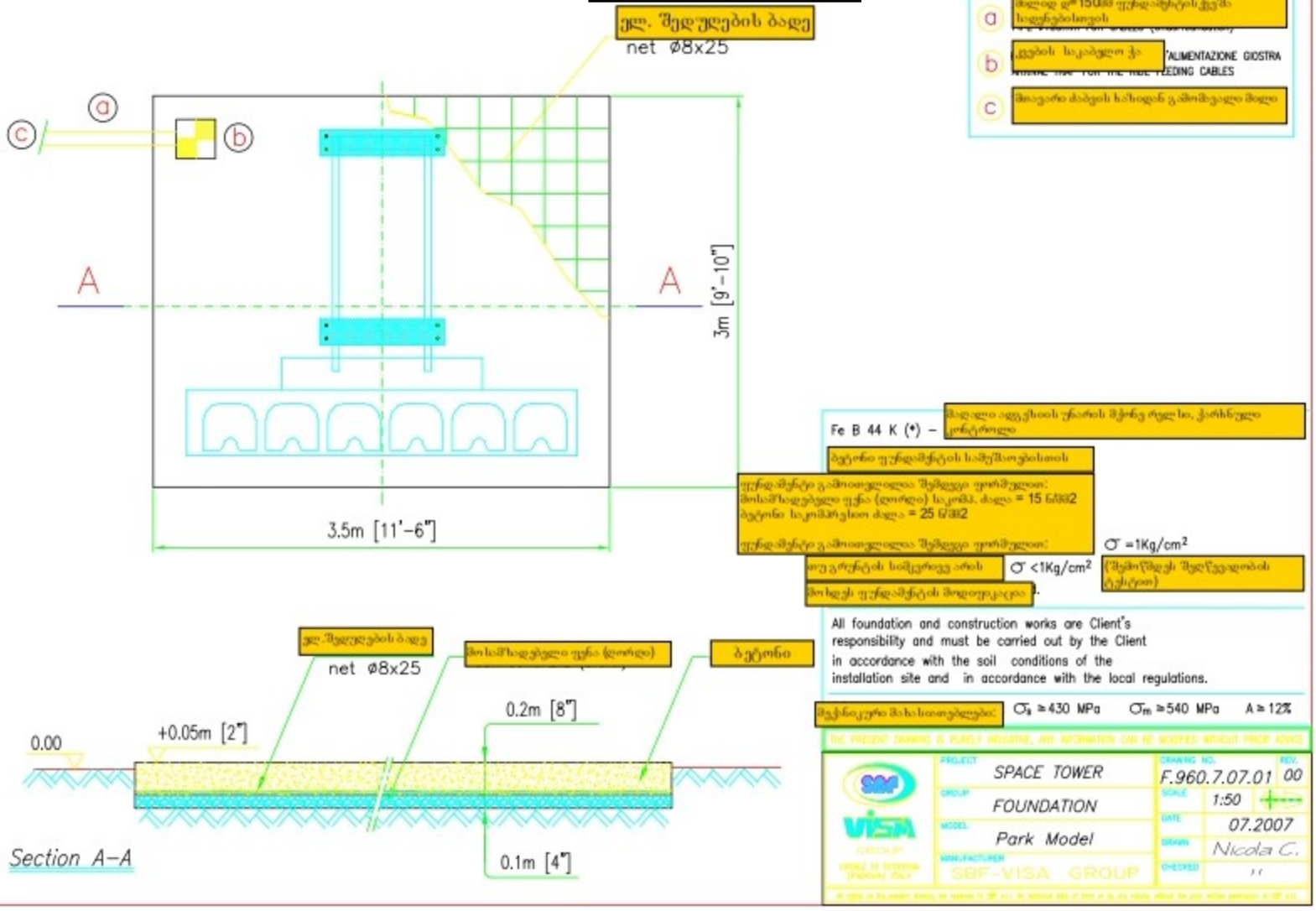

13. Mary Go Round »¼²Âº»ÄÁº »²ÁÄÂ¶¼º

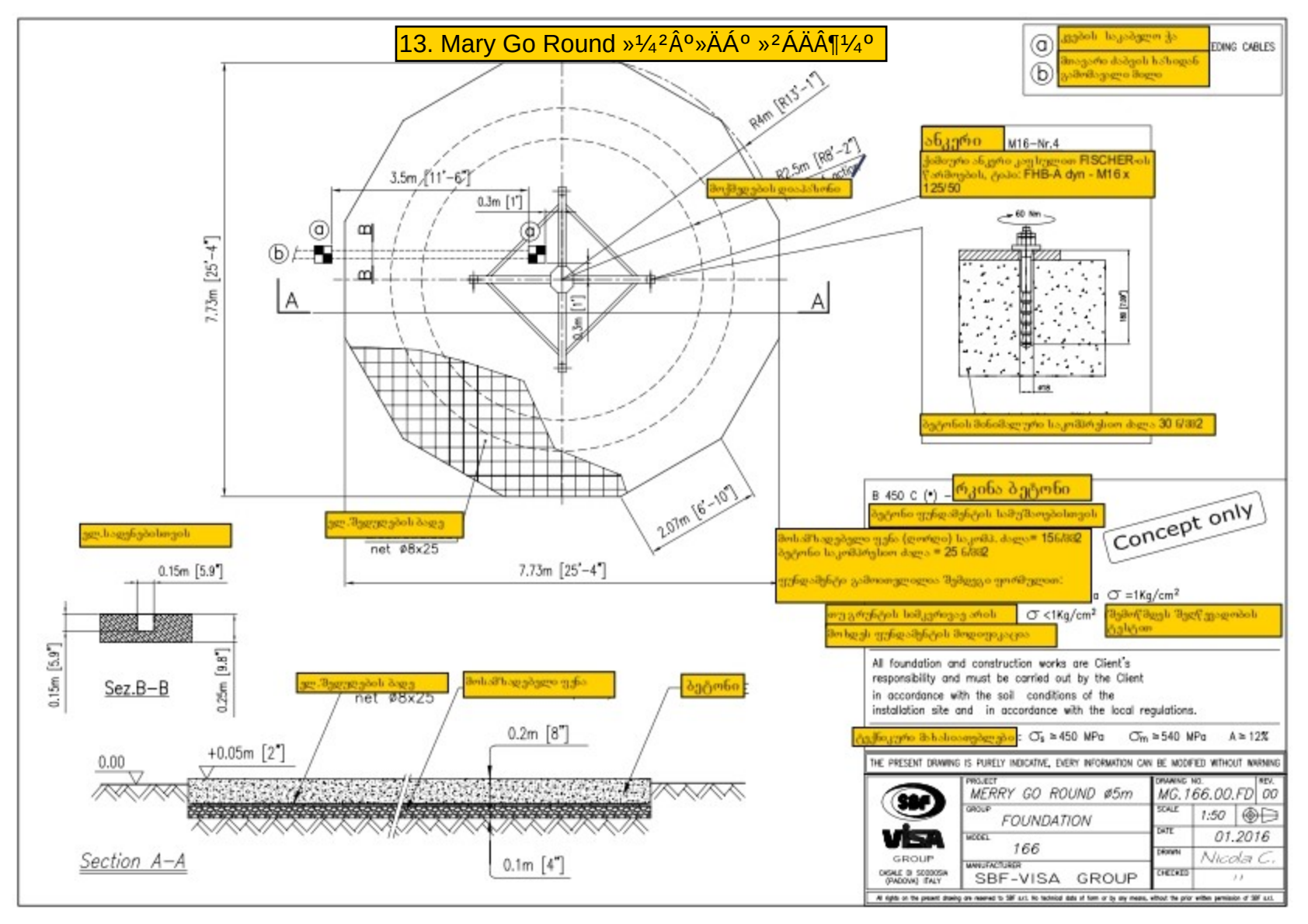

13. 13. Mary Go Round »¼²Âº»ÄÁº »²ÁÄÂ¶¼º

Peso totale a vuoto-Tot weight (empty): 3800 kg

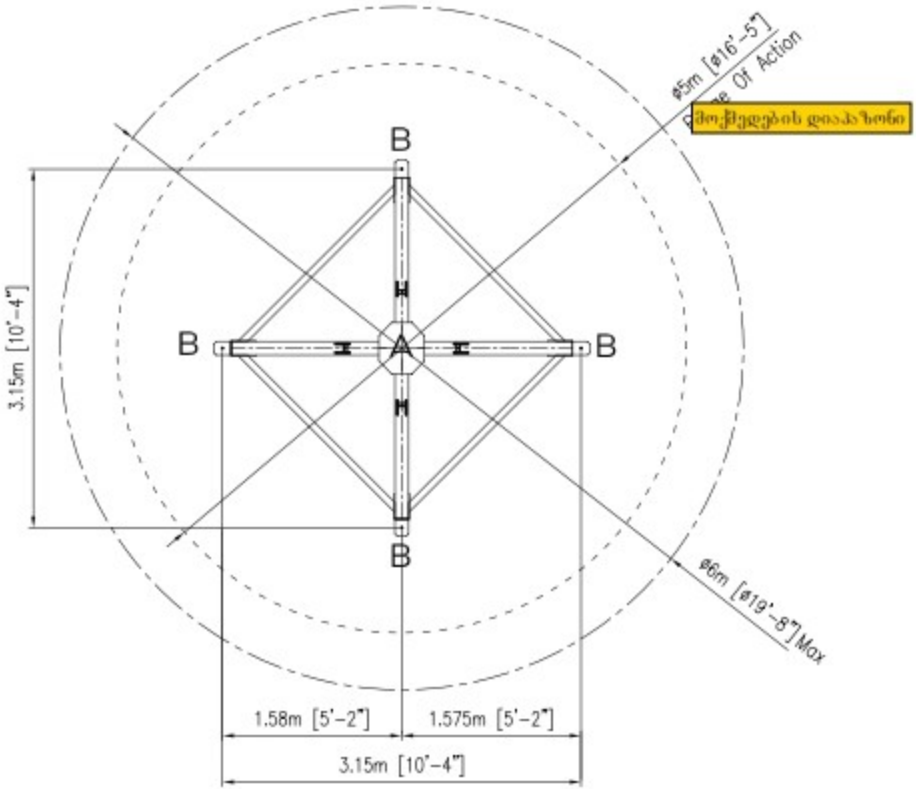

მიწის ეკრტიკალური დატვირთვა

A (NR.1)	B (NR.4)
5000 Kg.	400 Kg.

დატვირთვა ოპერაციულ არეალზე	370KG/M2

The choice of the place of installation and the installation of the ride is a total responsibility of the Client.
Therefore, especially for installation on floors, pay attention to the ground loads shown on this plan so that the support structure (floor or foundation) is properly sized and suitable, for purpose.
Moreover all foundation and construction works are Client's responsibility and must be carried out by the Client in accordance with the soil condition of the installation site and in accordance with the local regulations.

THE PRESENT DRAWING IS PURELY INDICATIVE, ANY INFORMATION CAN BE MODIFIED WITHOUT PRIOR ADVICE

SBF VISA GROUP
CASALE DI SCODOSIA (PADOVA) ITALY

PROJECT	MERRY GO ROUND 5Mt.	DRAWING NO.	MG.166.00.GL
		REV.	00
GROUP	GROUND LOADING	SCALE	1:50
SUBGROUP		DATE	01.2016
		DRAWN	Nicola C.
MANUFACTURER	SBF-VISA GROUP	CHECKED	"

All rights on the present drawing are reserved to SBF s.r.l. No technical data of form or by any means, without the prior written permission of SBF s.r.l.

13. Mary Go Round »¼²Âº»ÄÁº »²ÁÄÂ¶¼º

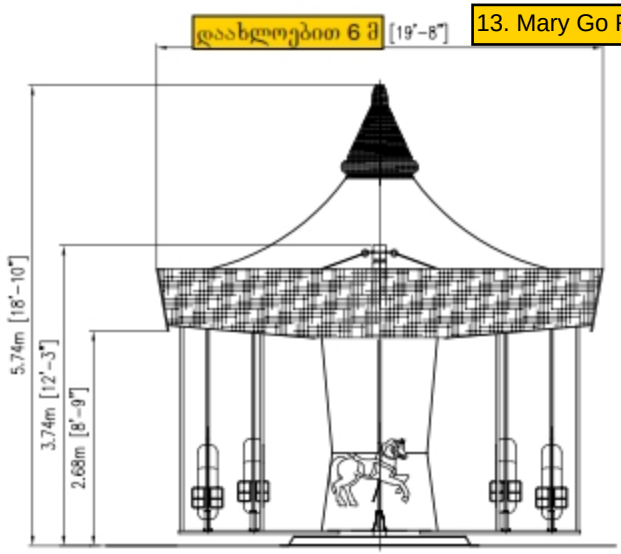

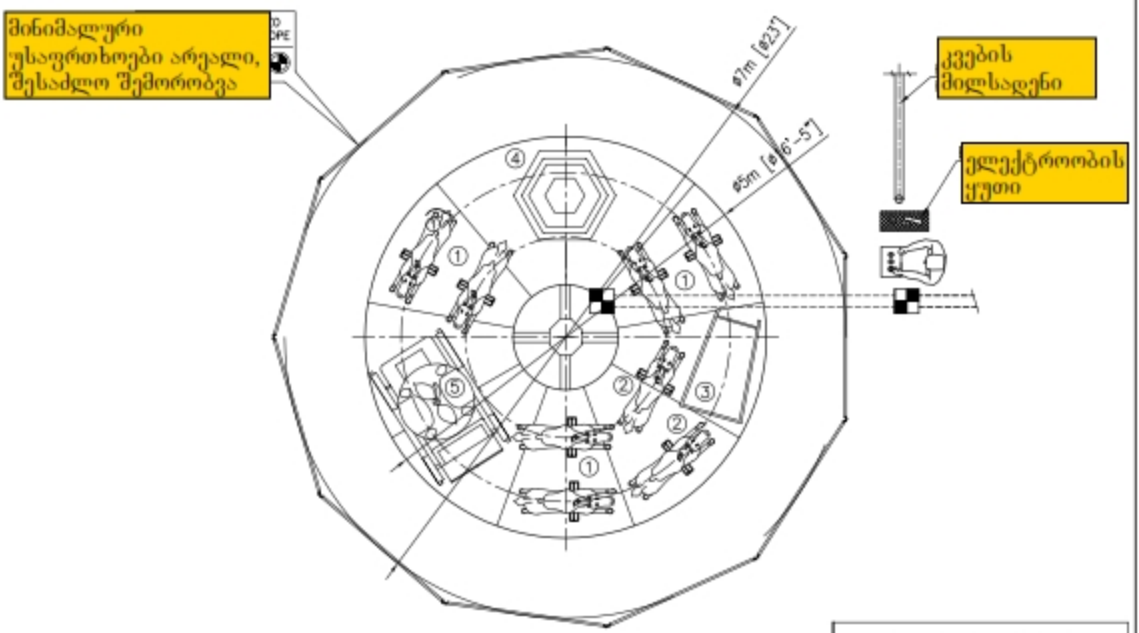

SPECIFICATIONS

ზომები	ø5.00 Mt.
ელ.ენერგია	2.5 kW
განათება	5 kW
საათობრივი სიმძლავრე	550
ადგილების რაოდენობა	20

① N°06 Jumping Horses
② N°02 Rocking Horses
③ N°01 Troika
④ N°01 Spinner or Tea Cups
⑤ N°01 Pumpkin

THE PRESENT DRAWING IS PURELY INDICATIVE, ANY INFORMATION CAN BE MODIFIED WITHOUT PRIOR ADVICE

SBF VISA GROUP
CASALE DI SCODOSIA (PADOVA) ITALY

PROJECT	MERRY GO ROUND ø5m
GROUP	GENERAL SCHEME
MODEL	166
MANUFACTURER	SBF-VISA GROUP
DRAWING NO.	MG.166.00.GS
REV.	00
SCALE	1:50
DATE	01.2016
DRAWN	Nicola C.
CHECKED	"

All rights on the present drawing are reserved to SBF s.r.l. No technical data of form or by any means, without the prior written permission of SBF s.r.l.

10.Happy Wheel ½Ë°²ÁÄ¼° ³¿Á³²¼°

Peso totale a vuoto–Tot weight (empty): 2800 kg

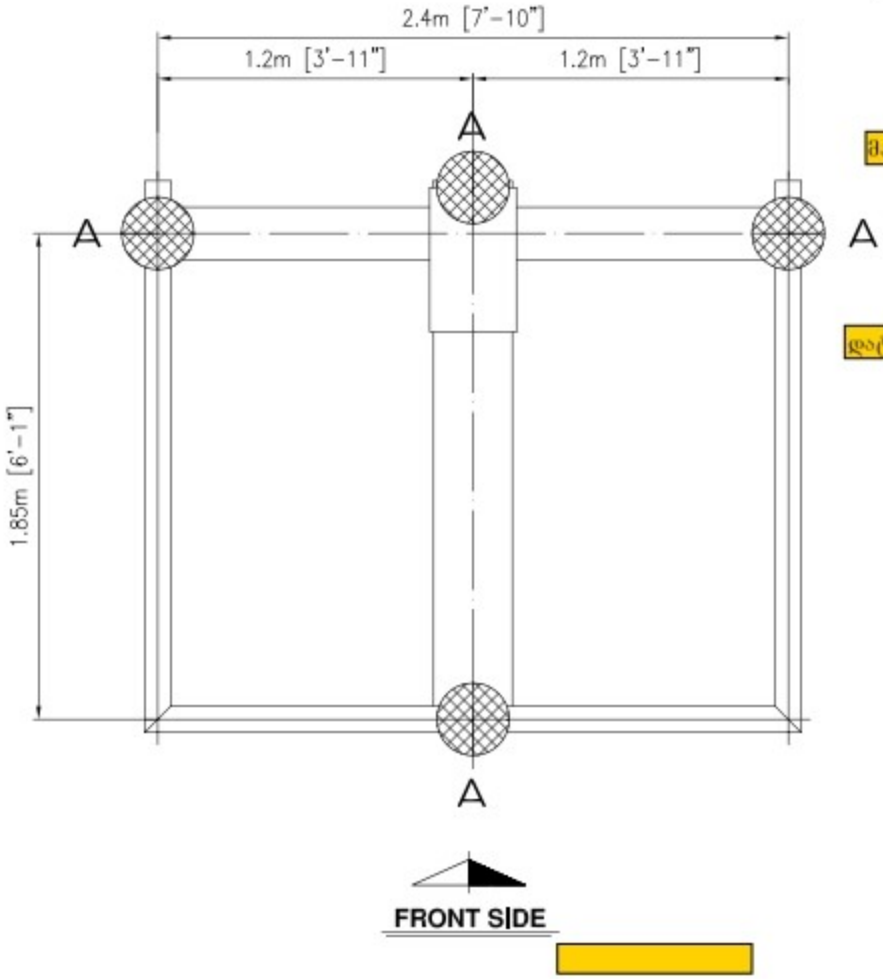

მაქსიმალური დინამიკური დატვირთვა (NR.4)

A	1200 KG.

დატვირთვა ოპერაციულ არეალზე 300KG/M2

NB: I carichi prodotti dal vento non sono considerati.
PS: Without Wind Load.

The choice of the place of installation and the installation of the ride is a total responsibility of the Client.
Therefore, especially for installation on floors, pay attention to the ground loads shown on this plan so that the support structure (floor or foundation) is properly sized and suitable, for purpose.
Moreover all foundation and construction works are Client's responsibility and must be carried out by the Client in accordance with the soil condition of the installation site and in accordance with the local regulations.

THE PRESENT DRAWING IS PURELY INDICATIVE, ANY INFORMATION CAN BE MODIFIED WITHOUT PRIOR ADVICE

SBF VISA GROUP
CASALE DI SCODOSIA (PADOVA) ITALY

PROJECT: KIDDIE WHEEL 5		DRAWING NO.: RP.704.5M.GL	REV.: 01
GROUP: GROUND LOADING		SCALE: 1:50	
MODEL: Park Model INDOOR		DATE: 04.2016	
MANUFACTURER: SBF-VISA GROUP		DRAWN: Nicola C.	
		CHECKED: "	

All rights on the present drawing are reserved to SBF s.r.l. No technical data of them or by any means, without the prior written permission of SBF s.r.l.

10.Happy Wheel ½Ë°²ÁÄ¼° ³¿Á³²¼°

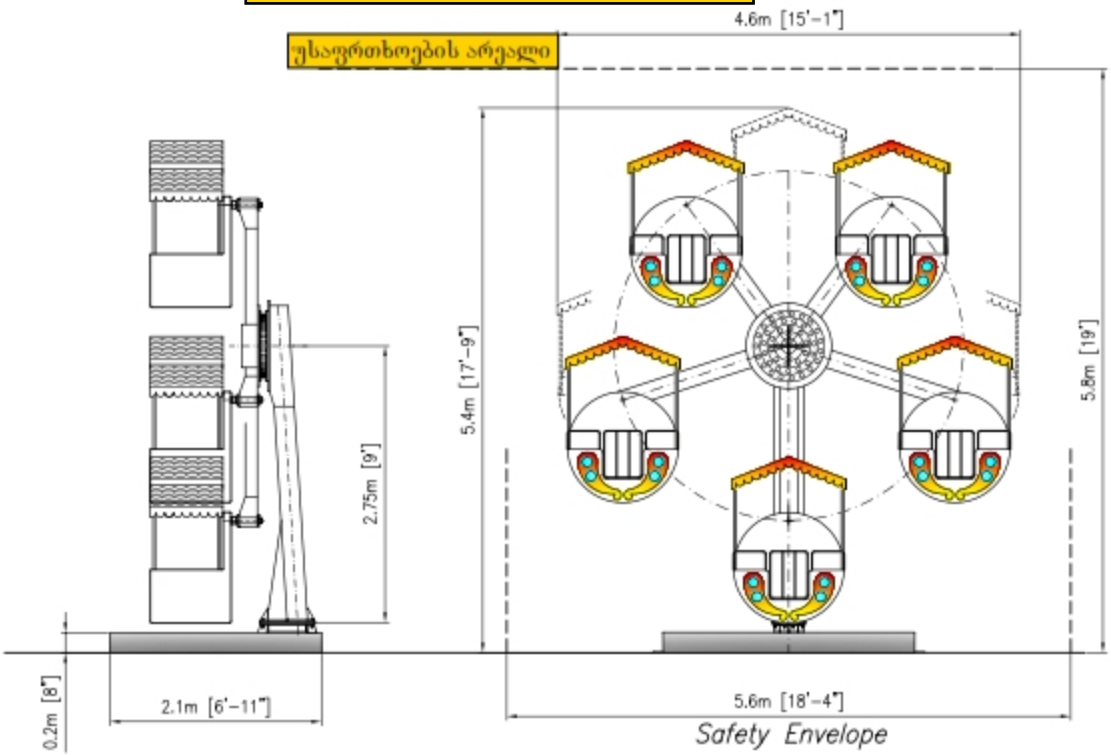

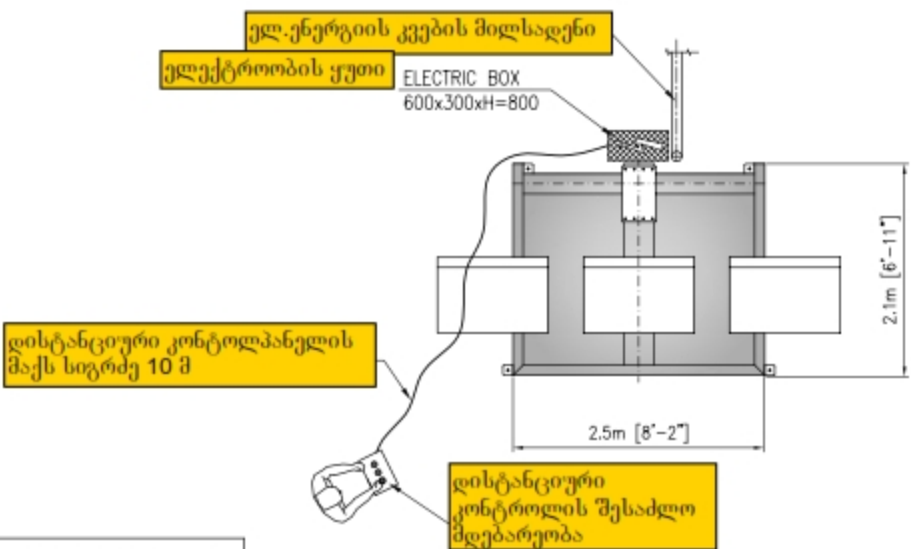

GENERAL INFORMATION

1.ოპერაციული არეალის ზომები	4.6x2.1 მ
2.მექანიზმები	5 ც
3.ადგილების რაოდენობა	20
4.მაქს. ოპერაციული სიჩქარე	
4.5ბრუნვა/წუთში	
5.ბრუნვის მიმართულება	
6.მოცულობა (კუბატი)	
7.მამოძრავებელი ენერგია	2.5 კვ
8.განათების ენერგია	3 კვ

THE PRESENT DRAWING IS PURELY INDICATIVE, ANY INFORMATION CAN BE MODIFIED WITHOUT PRIOR ADVICE

SBF VISA GROUP
CASALE DI SCODOSIA (PADOVA) ITALY

PROJECT	BIRD HOUSE WHEEL 5	DRAWING NO.	RP.704.5M.GS
		REV.	01
GROUP	GENERAL SCHEME	SCALE	1:50
MODEL	704 – Park Model	DATE	04.2016
		DRAWN	Nicola C.
MANUFACTURER	SBF-VISA GROUP	CHECKED	"

All rights on the present drawing are reserved to SBF s.r.l. No technical data of them or by any means, without the prior written permission of SBF s.r.l.

2. Family Coaster Â² ¿ Ì ²Ë ¿ ½ ¹ ¶ ³ º

a)დ 150 მმ-a)დ 150 მმ-ანი საკაბელო მილი
b)კვების საკაბელო ჭა
c)მთავარი ძაბვის ხაზიდან გამომავალი მილიანი საკაბელო მილი
b)კვების საკაბელო ჭა
c)მთავარი ძაბვის ხაზიდან გამომავალი მილი

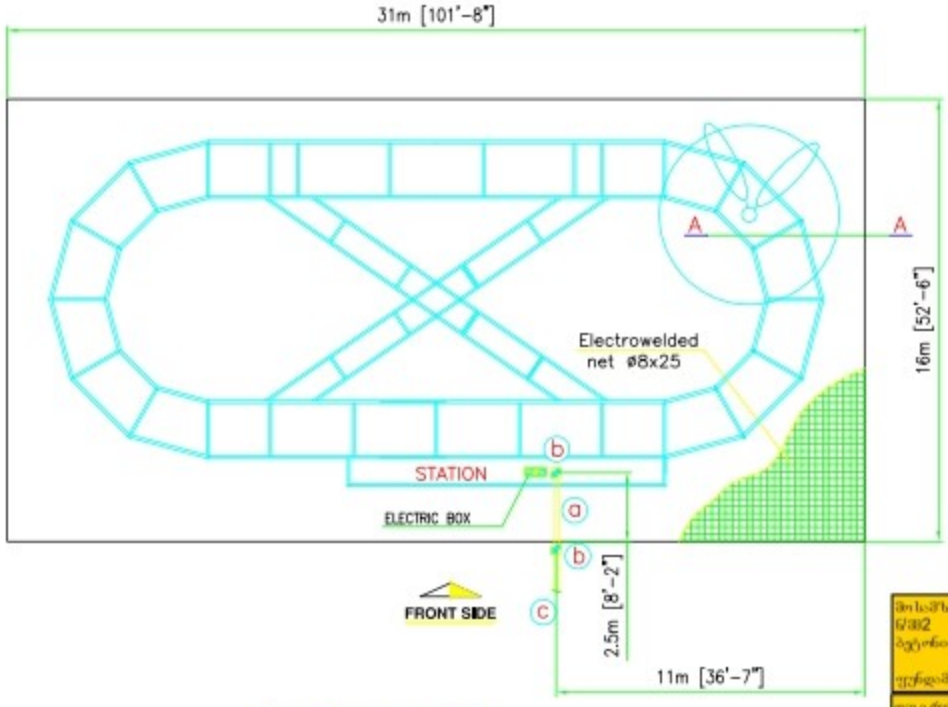

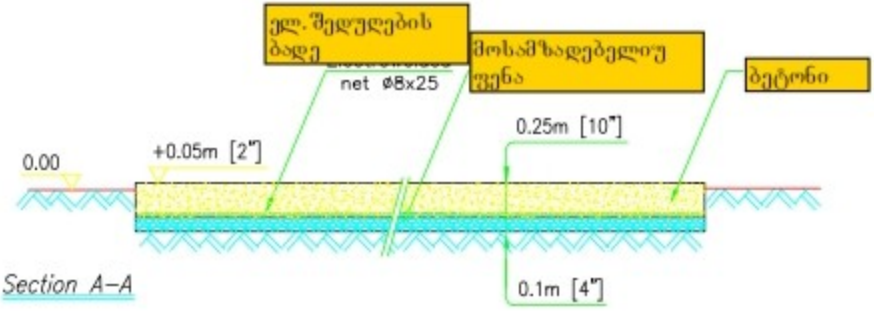

Fe B 44 K (*) –

მდგარი ადგილის უნარის მქონე რელსი, ჭარხლული კონტრასი

მოსამზადებელი ფენა (ღორღი) საკომპ. ძალა = 15 Kg/cm²
ბეტონი საკომპრესიო ძალა = 25 Kg/cm²

უცნობმიწა გამოითვლილია შემდეგი უთობელით: σ =1Kg/cm²

თუ გრუნტის სიმკვრივე არის σ <1Kg/cm²

მიხედვით უცნობმიწის მდგომარეობა

შემოწმება შეღწევადობის ტესტით

All foundation and construction works are Client's responsibility and must be carried out by the Client in accordance with the soil conditions of the installation site and in accordance with the local regulations.

(*) Mechanical Characteristic: $\sigma_s \geq 430$ MPa $\sigma_m \geq 540$ MPa $A \geq 12\%$

PROJECT	FAMILY COASTER	DRAWING NO.	F.4.10.12.02
GROUP	FOUNDATION	REV.	01
MODEL	MX000	SCALE	1:50
MANUFACTURER	SBF-VISA GROUP	DATE	02.2011
		DRAWN	Nicola C.
		CHECKED	"

14. Choco Cups Æ²·ºÂ à°¾Ì¾¶³º

a)ჭიქების საკბენლოჭა
b)მთავარი ძაბვის ხაზიდან გამომავალი მიწა

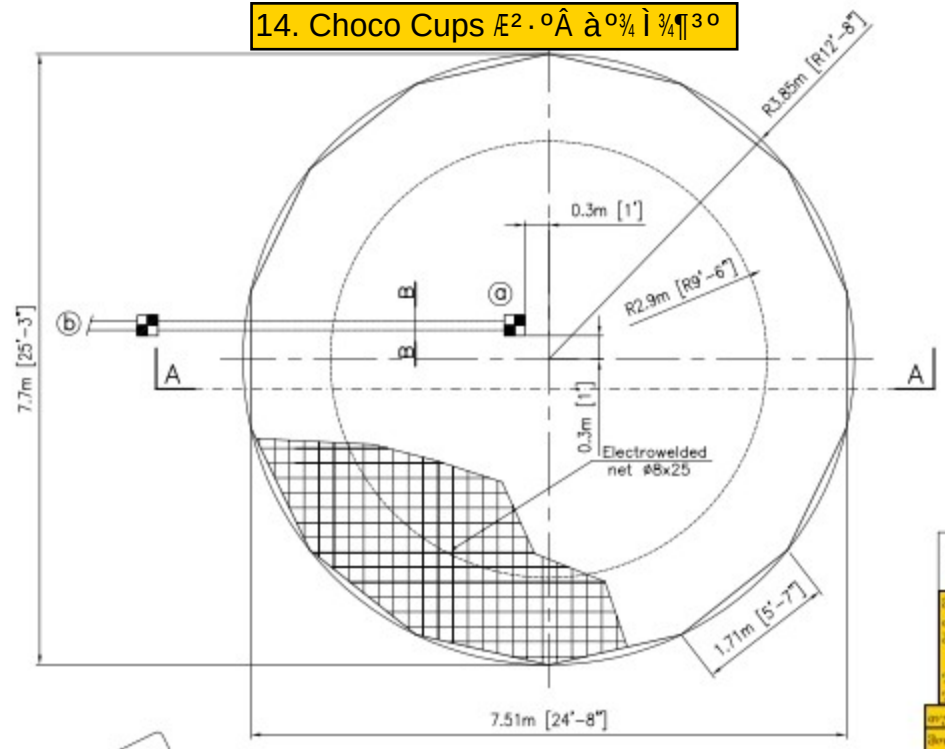

ელ.სადენებისთის

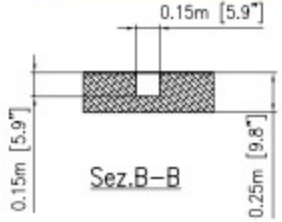

B 450 C (*) – რკინა ბეტონი

მოსამზადებელი ფენა (ღორღი) საკმ.
მასა = 15 ნმ3
ბეტონი საკმარისი მასა = 25 ნმ3

ფუნდამენტი გამოთვლილია შემდეგი ფორმულით:

σ =1Kg/cm²

ორგანული ნიადაგის

σ <1Kg/cm²

შემოწმებს შეღწევადობის ტესტით

მოხდეს ფუნდამენტის მოდიფიცირება

dified.

All foundation and construction works are Client's responsibility and must be carried out by the Client in accordance with the soil conditions of the installation site and in accordance with the local regulations.

(*) Mechanical Characteristic: $\sigma_s \geq 450$ MPa $\sigma_m \geq 540$ MPa A ≥ 12%

Concept only

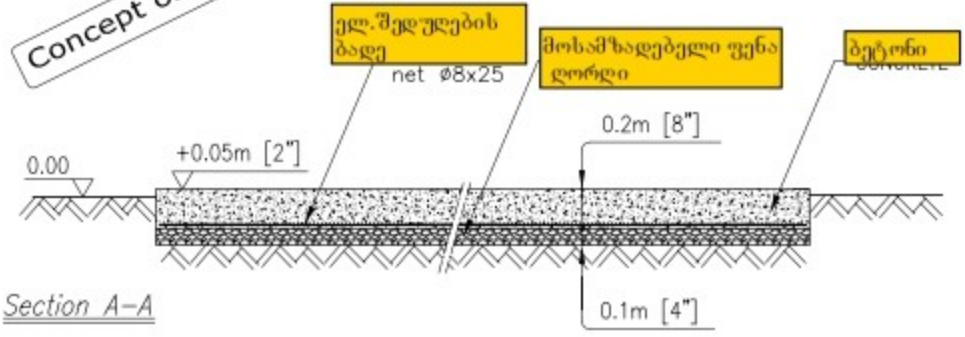

Section A-A

THE PRESENT DRAWING IS PURELY INDICATIVE, ANY INFORMATION CAN BE MODIFIED WITHOUT PRIOR ADVICE

SBF VISA GROUP
CASALE DI SCODOSIA (PADOVA) ITALY

PROJECT	COFFEE CUPS ø5.5m	DRAWING NO.	GB.T.01.14.FD
		REV.	01
GROUP	FOUNDATION	SCALE	1:50
MODEL	Park Model	DATE	04.2016
		DRAWN	Nicola C.
MANUFACTURER	SBF-VISA GROUP	CHECKED	"

All rights on the present drawing are reserved to SBF s.r.l. No technical data of them or by any means, without the prior written permission of SBF s.r.l.

14. Choco Cups Æ²·ºÂ à°¾Ì¾¶³º

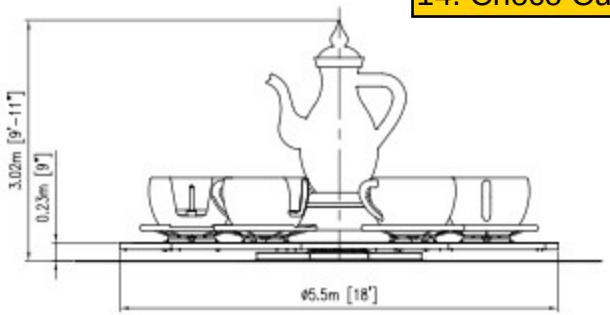



გრუნტზე დატვირთვა
GROUND LOAD

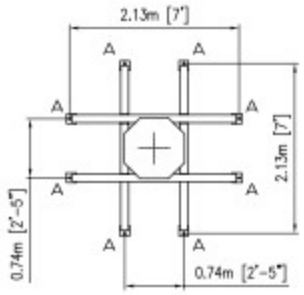

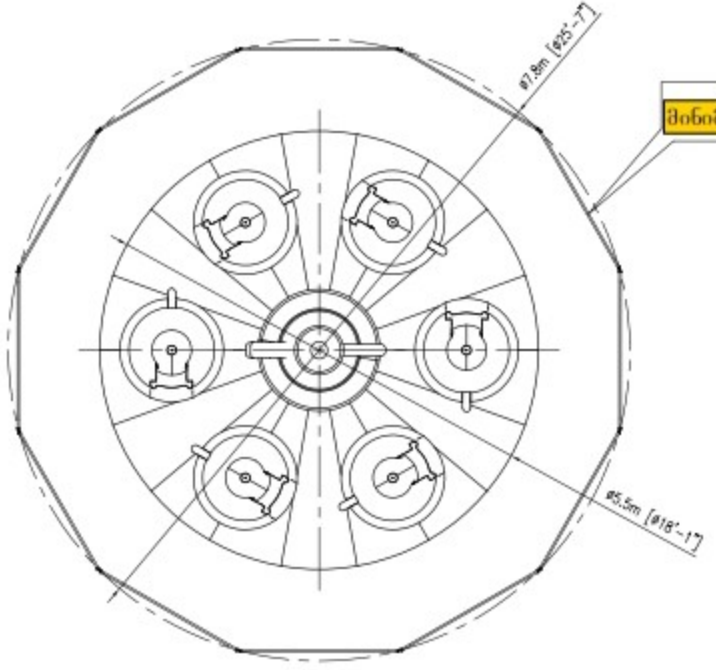

მინიმალური უსაფრთხოების არეალი



GENERAL INFORMATION					
1	DIMENSIONS (OPERATION AREA)	ø5,5m [ø18'-1"]	5	DIRECTION OF ROTATION	Clockwise-Anticlockwise
2	VEHICLES	6	6	CURBSIDE	1x207 Open Top
3	NUMBER OF SEATING	24	7		
4	MAXIMUM OPERATIONAL SPEED	5 rpm	8		

ELECTRICAL INFORMATION			LOAD INFORMATION		
1	MOTIVE POWER	1,5 kW	1	TOTAL RIDE WEIGHT	2000 Kg.
2	LIGHT POWER (Std)	0,5 kW	2	SUPPORT ON THE FLOOR:	Nr. 6
	LIGHT POWER (Led)	-	3	STATIC LOAD (A)	250 Kg.
3	OTHER POWER	-	4	DYNAMIC LOAD	400 Kg.
4	TOTAL POWER	2 kW	5	LOAD ON ACTION'S AREA	320 Kg/m2
5	VOLTAGE	220/380/415V - 50/60 Hz			

THE PRESENT DRAWING IS PURELY INDICATIVE, ANY INFORMATION CAN BE MODIFIED WITHOUT PRIOR ADVICE

SBF VISA GROUP
CASALE DI SCODOSIA (PADOVA) ITALY

PROJECT	COFFEE CUPS ø5.5m
GROUP	GENERAL SCHEME
MODEL	T.01.14 – Park Model
MANUFACTURER	SBF-VISA GROUP
DRAWING NO.	GB.T.01.14.GS
REV.	01
SCALE	1:50
DATE	04.2016
DRAWN	Nicola C.
CHECKED	"

All rights on the present drawing are reserved to SBF s.r.l. No technical data of from or by any means, without the prior written permission of SBF s.r.l.

15. Cartoon Mill ²¾º½²á. ÉºÂÅ·º¼º

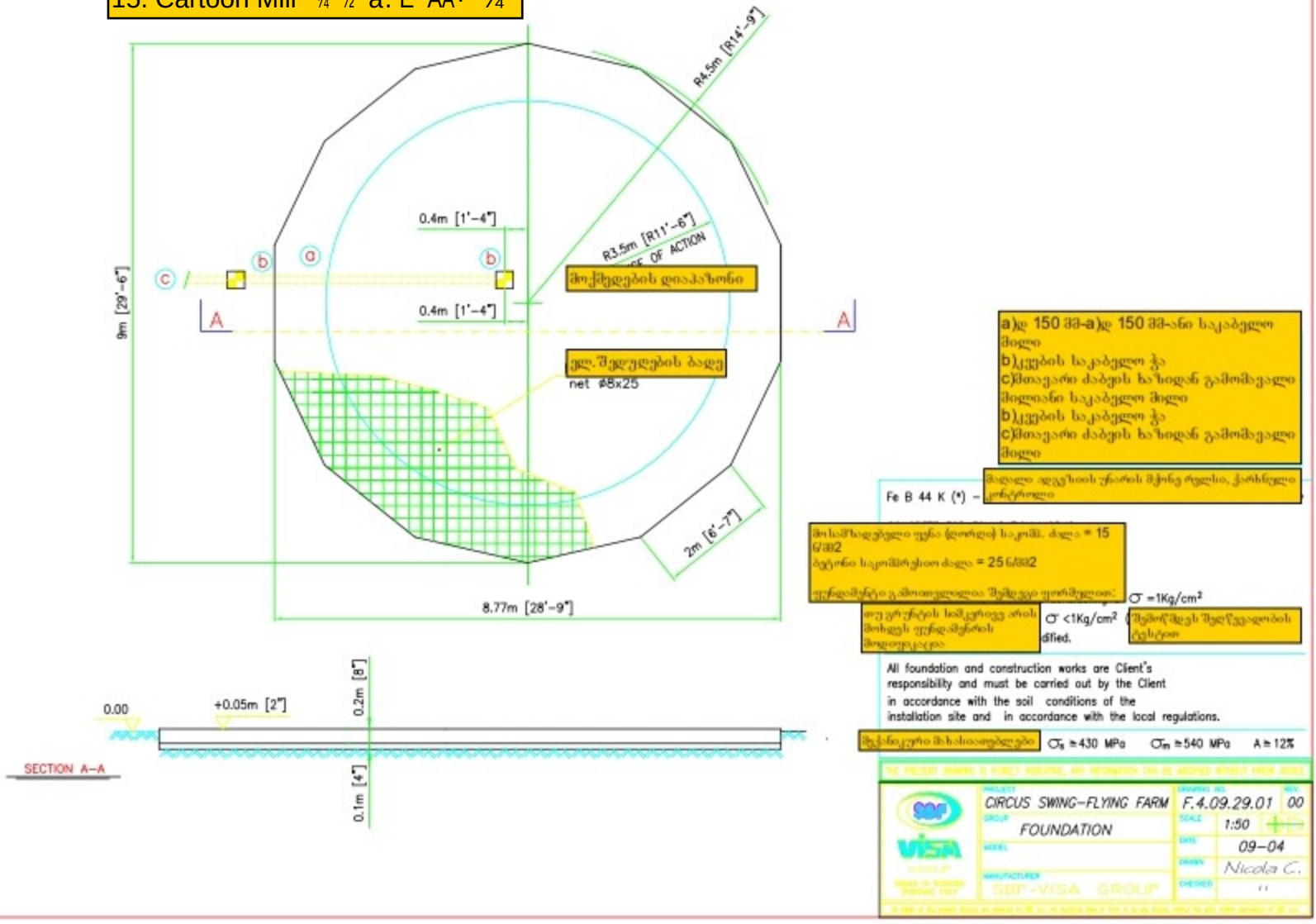

7. Trampoline ³²ÃÄÃº

foundation of Tramp lining

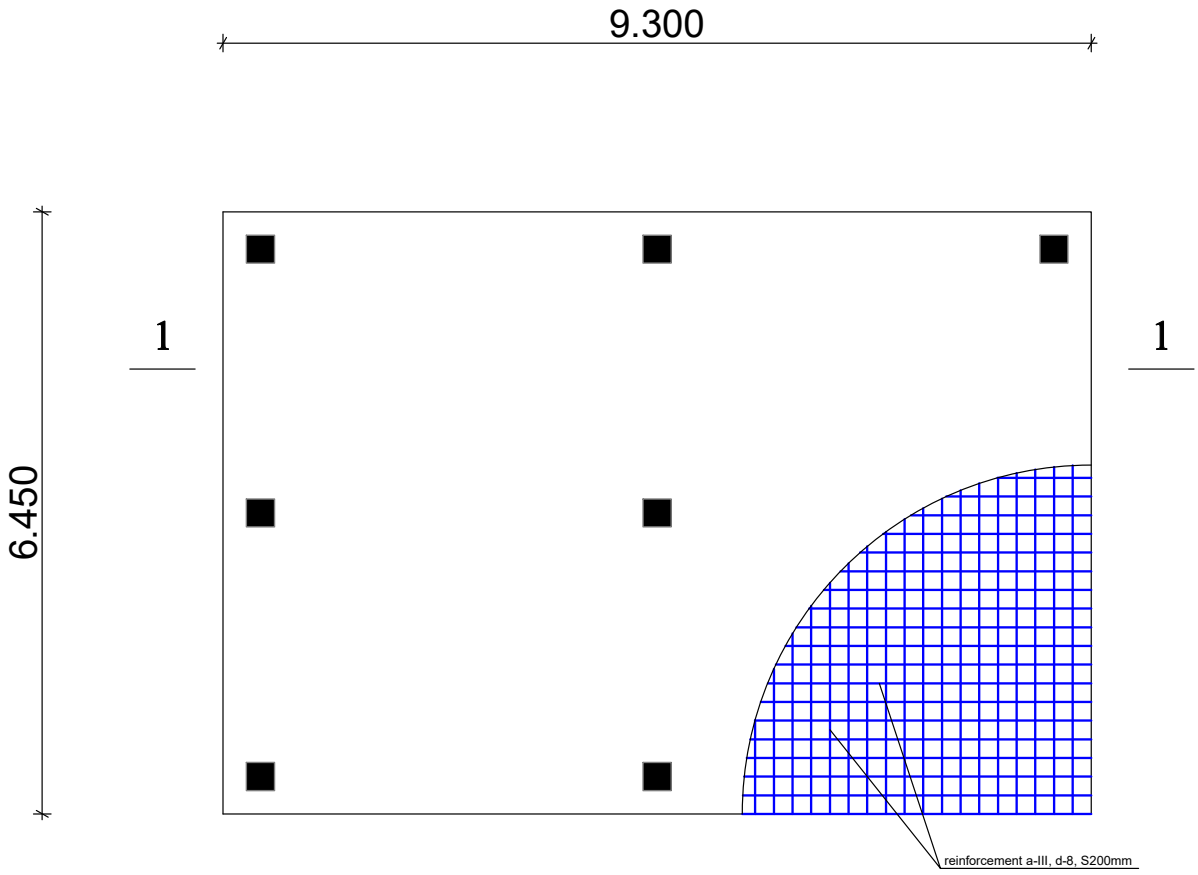

1 - 1

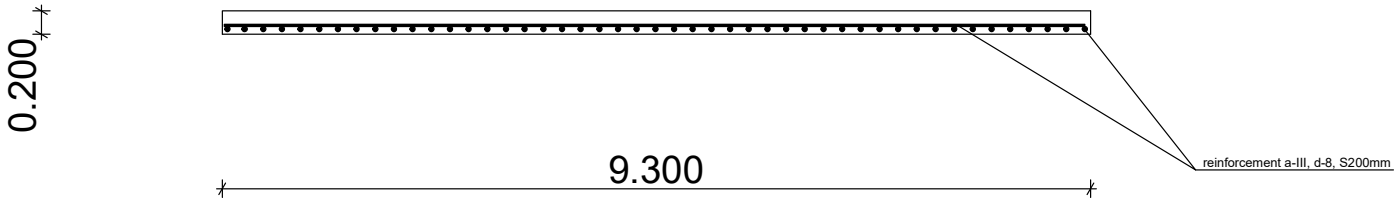

B 450 C (*) – CONCRETE STEEL

CONCRETE FOR FOUNDATION WORKS

POOR CONCRETE (Gravel) Rck≅15 N/mm²

CONCRETE Rck=30 N/mm²

N.B.: Foundation is calculated considering a σ =1Kg/cm²
if the soil should have σ <1Kg/cm² (Check with penetration test)
foundation must be modified.

All foundation and construction works are Client's responsibility and must be carried out by the Client in accordance with the soil conditions of the installation site and in accordance with the local regulations.

(*) Mechanical Characteristic: σ_s ≥ 450 MPa σ_m ≥ 540 MPa A ≥ 12%

THE PRESENT DRAWING IS PURELY INDICATIVE, ANY INFORMATION CAN BE MODIFIED WITHOUT PRIOR ADVICE

SBF VISA GROUP CASALE DI SCODOSIA (PADOVA) ITALY	PROJECT	DRAWING NO.	REV.
		RP.704.5M.FD	02
	GROUP: FOUNDATION	SCALE: 1:50	
	MODEL: Park Model	DATE: 04.2016	
	MANUFACTURER: SBF-VISA GROUP	DRAWN: Nicola C.	
		CHECKED: "	

All rights on the present drawing are reserved to SBF s.r.l. No technical data of them or by any means, without the prior written permission of SBF s.r.l.