metaloplastmasis karebi

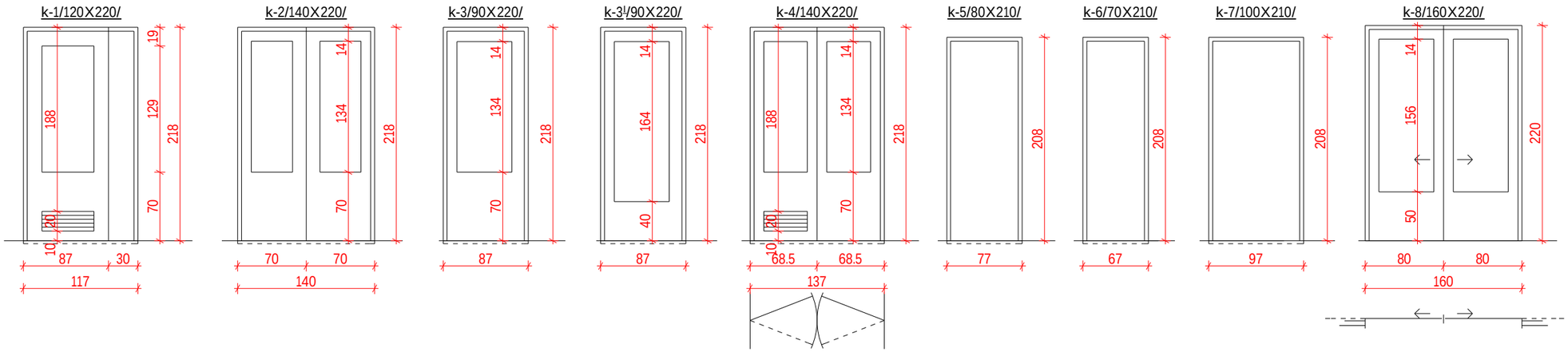

rkinis Sesasvleli karebi

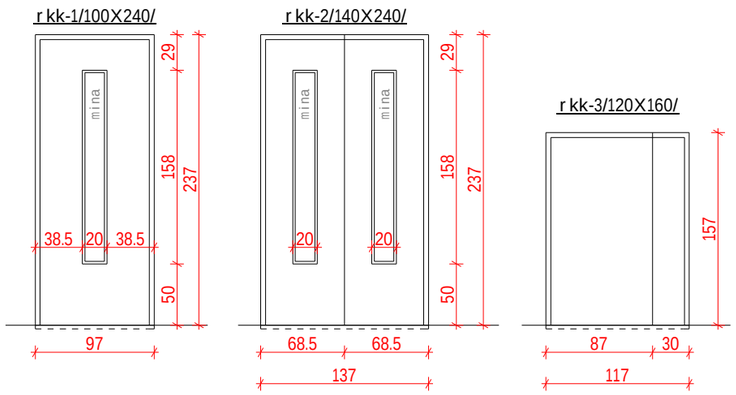

aivanze gasasvleli karebi

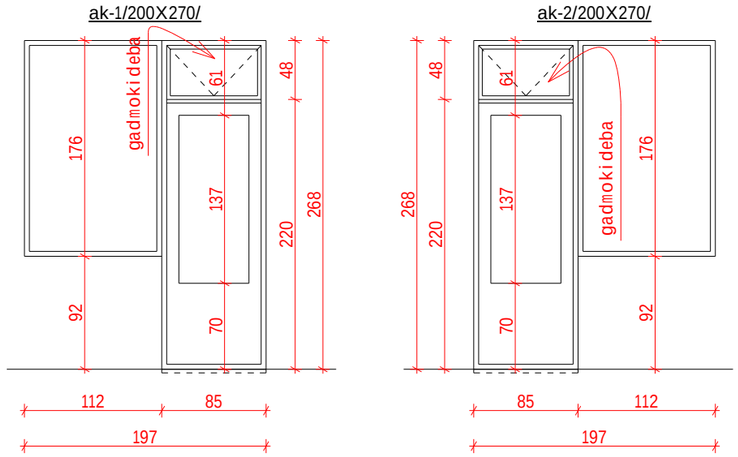

fanjrebi

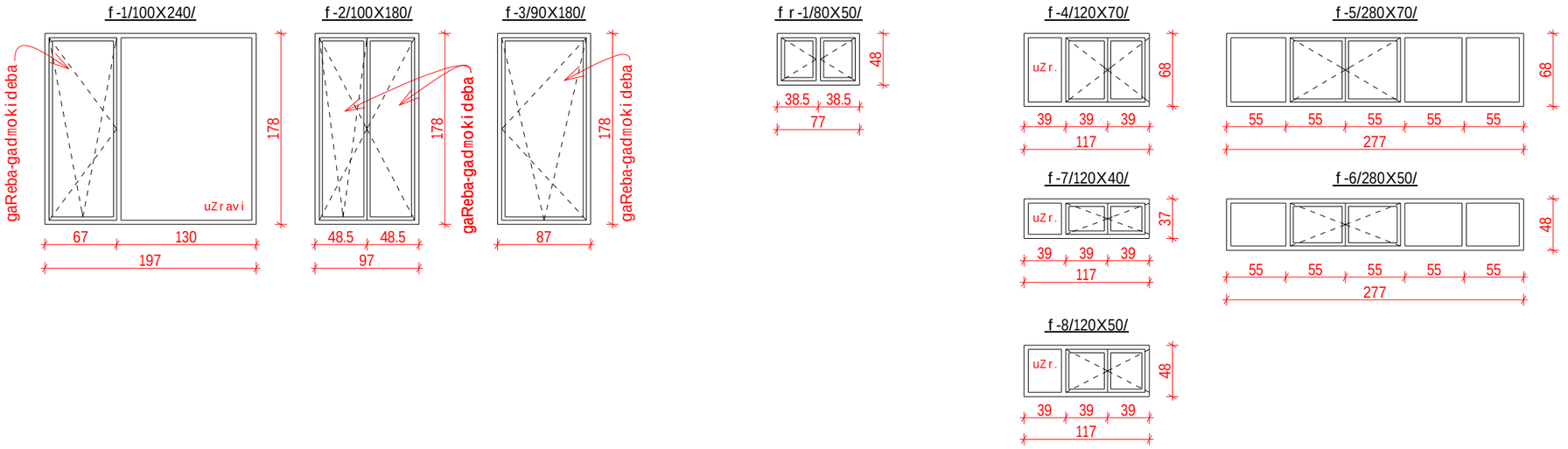

formati	A-3	dakveTis #
Tbilisi 2012 w.		9/12

eqsplikacia:

pirobiTi aRniSvnebi:

SeniSvna:

proeqtis saxelwodeba

q. TbilisSi, winandlis q. #9-Si md. mravalproriliani Tvalis klinikis proeqti



Sps "axali saqqalaqmeqproeqti"
al. yazbegis gamz. #2
pekinis q. #34
Phone: (995 32) 37 52 26

Tanamdeboba	gvari	xelmowera
direqtori		b. mirianaSvili
avtori		v. cuxiSvili
Seasrula		g. avaliSvili
		T. mosiaSvili

dasaxeleba	masStabi
kar-fanjrebis specifikacia	1:50

stadia	furceli	furclebi
mp		

#	marka	Riobis zoma (sm)	CarCos zoma (sm)	erTeulis farTobi (m^2)	sul farTobi (m^2)	Seminuli	yru	raodenoba sarTulebis mixedviT									
								sardafis sarTuli	I sarTuli	II sarTuli	III sarTuli	IV sarTuli	V sarTuli	VI sarTuli	teqnik. sarTuli	sul	SeniSvna
karebi																	
1	k-1	120X220	177X218	2.55	1.48	Seminuli	---	3	---	14	11	14	14	2	---	58	
2	k-2	140X220	137X218	2.99	15.00	Seminuli	---	2	---	1	---	---	---	2	---	5	
3	k-3	90X220	87X218	1.90	45.60	Seminuli	---	5	---	2	1	2	2	12	---	24	
4	k-3[I]	90X220	87X218	1.90	36.10	---	yru	7	3	1	5	---	---	3	---	19	
5	k-4	140X220	137X218	2.99	15.00	Seminuli	---	---	1	---	---	---	---	5	---	5	
6	k-5	80X210	77X208	1.60	98.00	---	yru	5	7	10	11	10	10	8	---	61	
7	k-6	70X210	67X208	1.39	9.73	---	yru	1	1	1	1	1	1	1	---	7	
8	k-7	100X210	97X208	2.02	12.12	---	yru	6	---	---	---	---	---	---	---	6	
9	k-8	160X200	ix. naxazi	2.56	5.12	Seminuli	---	---	---	---	---	---	---	2	---	2	
					238.15											187	
10	rkk-1	100X240	97X237	2.30	11.50	Seminuli	---	1	1	---	---	1	1	1	---	5	
11	rkk-2	140X240	137X237	3.25	6.50	Seminuli	---	---	2	---	---	---	---	---	---	2	
12	rkk-3	120X160	117X157	1.84	1.84	---	yru	---	---	---	---	---	---	---	1	1	
					19.84											8	
13	ak-1	200X270	ix. naxazi	4.25	38.25	Seminuli	---	---	---	1	2	3	3	---	---	9	
14	ak-2	200X270	ix. naxazi	4.25	34.00	Seminuli	---	---	---	1	2	2	3	---	---	8	
					72.25											17	
fanjrebi																	
1	f-1	200X280	197X178	3.51	130.00	Seminuli	---	---	7	9	7	6	5	3	---	37	
2	f-2	100X180	97X178	1.73	20.76	Seminuli	---	---	2	---	2	3	2	3	---	12	
3	f-3	90X180	87X178	1.55	34.10	Seminuli	---	---	---	---	---	---	---	22	---	22	
4	f-4	120X70	117X67	0.78	0.78	Seminuli	---	1	---	---	---	---	---	---	---	1	
5	f-5	280X70	277X68	1.88	3.76	Seminuli	---	2	---	---	---	---	---	---	---	2	
6	f-6	280X50	277X48	1.33	2.66	Seminuli	---	2	---	---	---	---	---	---	---	2	
7	f-7	120X40	117X38	0.45	0.45	Seminuli	---	1	---	---	---	---	---	---	---	1	
8	f-8	120X50	117X48	0.56	2.80	Seminuli	---	5	---	---	---	---	---	---	---	5	
9	fr-1	80X50	77X48	0.37	8.51	Seminuli	---	---	3	3	3	3	3	3	---	23	

formati	A-3	dakveTis #
Tbilisi 2012 w.		9/12

eqsplikacia:

pirobiTi aRniSvnebi:

SeniSvna:

proeqtis saxelwodeba

q. TbilisSi, winandlis q. #9-Si md. mravalprofiliani Tvalis klinikis proeqti



Sps "axali saqqalaqmeqproeqti"
al. yazbegis gamz. #2
pekinis q. #34
Phone: (995 32) 37 52 26

Tanamdeboba	gvari	xelmowera
direqtori		b. mirianaSvili
avtori		v. cuxiSvili
Seasrula		g. avaliSvili
		T. mosiaSvili

dasaxeleba	masStabi
kar-fanjrebis specifikacia	1:50

stadia	furceli	furclebi
mp		