daskvna

Senobis teqnikuri mdgomareobis Sesaxeb

Sinaarsi

Sesavali; samuSaos mizani; sakvlevi Senobis zogadi daxasiaTeba 2

sakvlevi Senobis mzidi konstruqciuli elementebis Sesaxeb 4

sakvlevi Senobis gare Semosva da iataki 9

sakvlevi Senobis saxuravi (dafarva) 11

tixrebi; specialuri daniSnulebis kibeebi 12

sakvlevi Senobis garSemo arsebuli arealis mdgomareobis Sesaxeb 13

samoqalaqo Tavdacvis obieqti _ safari 15

danarTi 1 16

danarTi 2 29

danarTi 3 31

danarTi 4 33

naxazi 1 34

naxazi 2 35

naxazi 3 36

naxazi 4 37

naxazi 5 38

naxazi 6 39

PDF created with pdfFactory trial version www.pdffactory.com

warmodgenil angariSSi mocemulia daskvna firma `ojT~-s kuTvnili, dausrulebeli samrewvelo Senobis (misamarTi: *q. Tbilisi, didi diRmis dasaxleba*) teqnikuri mdgomareobis Sesaxeb. agreTve rekomendaciebi arsebuli defeqtebis gamosworebisa da Senobis reabilitaciis SemTxvevaSi, misi Semdgomi usafrTxo eqspluataciis pirobebis Sesaxeb.

aqve aRvniSnavT rom dausrulebel SenobaSi vgulisxmobT mocemul etapze *sakvlevi Senobis Tavdapirveli daniSnulebiT eqspluataciis SeuZleblobas, rigi samSeneblo-samontaJo-gaZlierebiTi samuSaoebis Catarebis gareSe*. sakvlevi Senobis nawili (ZiriTadad arealis nawili niSnulze >4,40. ixile naxazi 3) dRes eqspluataciaSia misi arapirdapiri daniSnulebiT, ZiriTadad rogorc warmoebis narCenebis sawyobi.

warmovadgenT ra daskvnas dausrulebeli SenobisaTvis, Sesabamisad Cveni saboloo miznisa (ixile zemoT) daskvnis sawyis nawilSi vaxdenT sakvlevi Senobis mikuTvnebas/aRweras Senoba-nagebobaTa ZiriTad maklsificirebel niSnebTan/maxasiaTeblebTan misi *daniSnulebis, moculobiT-gegmarebiTi da konstruqciuli* gadawyvetebis Sesabamisad, ris Semdegac gadavdivarT Senobis, misi mzidi konstruqciuli elementebis arsebuli mdgomareobis aRweraze/dafiqsirebaze da warmovadgenT rekomendaciebs, romelTa gaTvaliswinebac aucileblad mogvaCnia sakvlevi Senobis reabilitaciis/sawarmoo funqciis dabrunebis SemTxvevisaTvis.

sakvlevi Senoba warmoadgens dausrulebel samrewvelo Senobas. damoukideblad mrewvelobis konkretuli dargisa, oTx ZiriTad jgufad:

- sawarmoo;
- energetikuli
- satransporto-sasawyobo;
- damxmare Senobebi/saTavsoebi,

dayofili samrewvelo Senobebidan Cveni sakvlevi Senoba Tavisi pirveladi daniSnulebiT miekuTvneba *sawarmoo Senobebs.* qvemoT mocemulia samrewvelo SenobaTa moculobiT-gegmarebiTi da

PDF created with pdfFactory trial version www.pdffactory.com

konstruqciuli gadawyvetebis ZiriTadi maklasificirebeli niSnebi da am niSnebTan sakvlevi Senobis mikuTvnebis CamonaTvali:

malebis raodenobis mixedviT – erTmaliani da mravalmaliani:

sakvlevi Senoba _ mravalmaliani (SeniSvna: mocemul SemTxvevaSi oTxmaliani (malis sigrZe 18m) niSnulze >4,40; sammaliania (malis sigrZe 6m) niSnulze >0,00; sammaliania (malis sigrZe 6m) niSnulze >-1,90; ixile naxazebi 1, 2, 3, 4)

sarTulebis raodenobis mixedviT _ erTsarTuliani da mravalsarTuliani;

sakvlevi Senoba _ mravalsarTuliani (SeniSvna: mocemul SemTxvevaSi gvaqvs gansakuTrebuli varianti e. w. *orsarTuliani samrewvelo Senoba*, detalurad ixile qvemoT);

amwe-gadasatani aRWurvilobis arsebobis mixedviT _ amwiT da amwis gareSe;

sakvlevi Senoba _ amwiT (SeniSvna: tipi _ Sekiduli amwe)

saxuravis konstruqciuli sqemis mixedviT _ karkasuli brtyeli (saxuraviT koWebze, fermebze, CarCoebze, TaRebze); karkasuli sivrculi (garsebi, naoWebi), Sekiduli da urTierTmkveTi mzidi elementebi;

sakvlevi Senoba _ karkasuli brtyeli (SeniSvna: saxuraviT fermebze);

ZiriTadi mzidi konstruqciebis masalis mixedviT _ rkinabetonis karkasiT (asawyobi, monoliTuri, asawyob-monoliTuri); liTonis karkasiT da aguris mzidi kedlebiT;

sakvlevi Senoba _ rkinabetonis asawyobi karkasi;

gaTbobis sistemis mixedviT _ gaTbobis gareSe da gaTbobiT;

sakvlevi Senoba _ gaTbobiT;

ventilaciis sistemis mixedviT _ bunebrivi ventilaciiT (aeracia SemomzRudav konstruqciebSi mowyobili specialuri Riobebidan) da xelovnuri-gamwovi ventilaciiT (ventilatorebiTa da haersatari sistemebiT);

sakvlevi Senoba _ orive tipi;

ganaTebis sistemis mixedviT _ bunebrivi, xelovnuri da kombinirebuli;

sakvlevi Senoba _ bunebrivi da kombinirebuli;

saxuravis profilis mixedviT _ SeqfarniT da maT gareSe;

sakvlevi Senoba _ SuqfarniT;

PDF created with pdfFactory trial version www.pdffactory.com

sakvlev Senobas agreTve gaaCnia winaswaragebuli, CaSenebuli tipis TavSesafari _ samoqalaqo Tavdacvis damcavi nageboba. rac Seexeba mis moculobiT-gegmarebiT gadawyvetas, is Sesrulebulia mSvidobian periodSi (anu misi pirdapiri daniSnulebiT moxmarebis ar saWiroebis dros) sxvadasxva mizniT misi eqspluataciis SesaZleblobis gaTvaliswinebiT. es SeiZleba iyos warmoeba, kvebis obieqti, sasawyobo meurneoba da a.S.

sakvlevi Senobis maklasificirebel niSnebTan mikuTvnebis zemoT aRwerili proceduris dasrulebis Semdeg gadavdivarT mzidi konstruqciuli elementebisa da sakvlevi Senobis dRes arsebuli saerTo mdgomareobis fiqsaciaze/aRweraze da samuSaos miznis Sesabamisi rekomendaciebis warmodgenaze.

sakvlevi Senobis mzidi konstruqciuli elementebis Sesaxeb

sakvlevi Senoba gegmaSi warmoadgens sworkuTxeds zomebiT (LXB=157X97). Senoba ganivad dayofilia ori temperaturul-jdeniTi nakeriT, grZivad ki erTiT (ixile naxazi 3). am ukanaskneliT Senobis orsarTuliani nawili gamoyofilia erTsarTuliani nawilisagan. *imis gaTvaliswinebiT rom Senoba seismurad aqtiuri regionisTvis proeqtirdeboda da Sendeboda, xsenebul nakerebi agreTve asruleben seismousafrTxoebis nakerebis funqcias.*

sakvlevi Senobis mzid konstruqciul sistemas qmnis Sereuli sarTulianobis mqone ganivi CarCo _ erT ganiv malSi orsarTuliani, momijnave sam malSi ki erTsarTuliani. orsarTuliani CarCo da Sesabamisad am elementiT Seqmnili areali ki Tavis mxriv aris gansxvavebuli simaRlis (ixile naxazebi 1, 2, 3, 4). ganivi CarCoebi Sedgenilia svetebiTa da saxuravis mzidi fermebiT.

ganivi CarCos erTsarTuliani nawilisaTvis svetebi warmoadgens Sekiduli amwis mqone saamqrosaTvis gankuTvnil rkinabetonis mza/qarxnul nakeTobebs 12, 18 da 24m malisa da 6, 12m pirobebSi. Cvens SemTxvevaSi mali 18m, biji 12m. aseTi svetebi mzaddeboda simaRliT 8100mm, 9600mm da ganivkveTebiT 400X400, 500X500 da 600X500mm. Cvens SemTxvevaSi gvaqvs simaRle 8100mm, ganivkveTebi: ganapira _ 400X400mm, Sualeduri _

PDF created with pdfFactory trial version www.pdffactory.com

500X500mm. amasTan Sualedur svetebs fermebis dayrdnobis arealSi orive mxridan erTad aqvs 100mm-iani gafarToeba.

sakvlevi Senobis orsarTuliani nawilisaTvis ganivi CarCo Sedgenilia svetebiT, sarTulSua gadaxurvis mzidi rigelebiTa da saxuravis mzidi fermebiT. am SemTxvevaSi (`D~ da `A~ RerZebs Soris ixile naxazi 4) svetebis `gadabma~ _ maTi pirapirebis Reroebis foladis saTaveebTan miduReba da Semdgomi damonoliTeba, xdeba meore sarTulis doneze (niSnuli >4,40); amave niSnulis doneze damontaJebulia igive svetebi, rac gamoyenebulia momijnave (`E~ da `N~ RerZebs Soris) malebSi. pirvel doneze (niSnuli >0,00) gvaqvs 400X400mm ganivkveTis svetebi, calmxrivi da ormxrivi konsolebiT sarTulSua rigelebis dasyrdnobad. `1~-`4~ da `22~-`29~ RerZebs Soris ganTavsebuli zemoT aRniSnuli svetebi niSnulis >0,00 Tanapirad eyrdnoba betonis masiur sayrdenebs (ixile naxazebi 1,2, suraTebi 1.21 _ 1.28).

rigelebi svetebTan SeerTebulia maTi armaturebis Sverilebisa da Catanebuli sayrdeni detalebis, svetis konsolis/konsolebis Casatanebel detalebTan daduRebiTa da maT Soris warmoqmnili RreCos samontaJo betoniT SevsebiT. Tavis mxriv rigelebi warmodgenilia rkinabetonis Taroebiani koWebiT, romlis mTliani simaRlea 800mm, mTliani sigane 650mm, Camosayrdnobi ubnis simaRle ki Seadgens 400mm-s.

sarTulSua gadaxurvis mosawyobad gamoyenebulia wibovani filebi sigrZiT 5950mm, siganiT 1500mm, simaRliT 400mm. filebi Camoyrdnobilia da Catanebuli detalebis SeduRebiT dakavSirebulia rigelis TaroebTan.

saxuravis mzidi rigelis funqcias orive (erTsarTuliani, orsarTuliani) ubnisaTvis asruleben TaRovani uiribno rkinabetonis fermebi (Серия 1.463-3). fermis sigrZe _ 1790mm, panelis sigane _ manZili dgarebis RerZebs Soris aris 3000mm, ori kidura panelis sigane Seadgens 1500mm-s; Sesabamisad danarCeni nawili fermis sayrdeni ubnebia. sayrdeni ubnis simaRle Seadgens 880mm-s; fermis simaRle (qveda da zeda sartylebis zeda zedapirebs Soris manZili) malis SuaSi 3000mm-is tolia; fermis sisqe Seadgens 280mm-s. fermaze damontaJebulia Sekiduli amwe. gamoyenebulia am tipis amwis mowyobis e.w. moqnili Sekidebis sqema anu amwis ZiriTadi foladis koWis samoZrao gorgolaWebis grZivad savali/gadasaadgilebeli ortesebri koWebi, foladis ReroebiT

PDF created with pdfFactory trial version www.pdffactory.com

(Svelerebi) aris Sekiduli fermis zeda sartyelze. aRniSnuli tipis fermebis konstruireba xdeboda 300; 400; 500kgZ/m^2 datvirTvebisaTvis, xolo Sekiduli amwis/amweebis tvirTamweoba aRniSnuli tipis fermebisaTvis Seadgens 3; 5t-s. mocemul SemTxvevaSi mzidi svetebis badisa (18X12m) da fermis elementebis zomebisa (kveTis simaRleebi _ zeda sartylis, qveda sartylis, dgaris Sesabamisad 300, 340, 300mm) gamomdinare konstruqcia daproeqtebulia 5 t-ze. fermebi svetebTan dakavSirebulia WanWikebiTa da Catanebuli detalebis erTmaneTTan daduRebiT.

saxuravis mosawyobad gamoyenebulia rkinabetonis wibovani filebi zomebiT 11960X2980X450mm da 11960X1480X450mm. maTi damagreba fermis zedasartyelze Sesrulebulia Catanebuli detalebis urTierTmiduRebiT.

zemoT aRwerili sakvlevi Senobis ganivi CarCoebi erTmaneTTan dakavSirebulia (Sesabamisad grZivi mimarTulebiT mzid sistemas qmnis) da amdenad misi grZivi mimarTulebiT gaxistebas uzrunvelyofs:

- saxuravis wibovani panelebis erTobliobiT warmoqmnili sivrculi diski;
- fermis doneebSi (qveda da zeda sartylebs Soris arsebuli areali) mowyobili vertikaluri kavSirebi (ixile naxazi 5). aRniSnuli kavSirebi konstruqciulad gadawyvetilia foladis paralelur sartyliani fermebiTa da xisti ganmbrjenebiT. es ukanaskneli Sedgenilia foladis naglini ortesebri koWebiT. aRniSnuli fermebi da ganmbrjenebi ganTavsebulia rkinabetonis ganivi fermebis Sua nawilSi da erTmaneTTan akavSirebs momijnave (erTi bijiT _ 18m dacilebuli) fermebis zeda da qveda sartylebs;
- vertikaluri kavSirebi svetebs Soris, romelic aseve Sesrulebulia foladis paralelursartyliani fermebiT.

grZivi mimarTulebiT Senobas aqvs eqvsi Suqfarani. maTgan oTxis sigrZe 36m-ia, oris ki 12m. maTi siganea 6m. isini ganlagebulia sakvlevi Senobis ganivkveTis meore da mesame malebSi. Suqfarnebis pirveli wyvili (36m-iani) iwyeba meore bijidan (RerZi `3~ -is gaswvriv. ixile naxazi 5); meore wyvili (12m-iani) iwyeba meeqvse bijidan (RerZi `14~ -is gaswvriv. ixile naxazi 5); mesame wyvili (36m-iani) iwyeba mecxre bijidan (RerZi `21~ -is gaswvriv. ixile naxazi 5);

PDF created with pdfFactory trial version www.pdffactory.com

Suqfaranis mzidi (ixile suraTebi 3.3, 3.14_3.18) konstruqciebi warmoadgenilia foladis profilirebuli elementebiTa da foladis fermebiT, romlebic dakavSirebulia gadaxurvis rkinabetoniis mzid fermasTan. garda Suqfarnis Semosvis daWeris funqciisa, aRniSnuli konstruqciuli elementebi aseve asruleben ganivi CarCoebis grZivi kavSirebis funqcias

rkinabetonis asawyobi karkasis zemoT aRwerili elementebis (igulisxmeba sakuTriv mxolod elementebi) teqnikuri mdgomareoba detaluri vizualuri daTvalierebiT SeiZleba Sefasdes rogorc damakmayofilebeli araviTari arsebiTi saxis defeqtebi rkinabetonis asawyob nakeTobebSi ar fiqsirdeba. aRniSnuli Sefaseba ar gavrceldeba maT Soris arsebul calkeul kavSirebze (ixile qvemoT).

damatebiT CamoTvlili nakeTobebidan calkeulebisaTvis Sps `nagebobebis daproeqtebisa da testirebis~ centridan mowveul specialistTan TanamSromlobiT dadgenil iqna betonis simtkice. am mizniT gamoyenebul iqna Smidtis tipis CaquCi. TiToeul konstruqciul elementze gazomva tardeboda 10 wertilSi. xelsawyos orientacia: svetebisaTvis _ gverdidan; fermis qveda sartylisaTvis _ gverdidan; rigelebisaTvis _ qvemodan; filebisaTvis _ qvemodan. saZiebo sidideebis gansazRvris safuZvelia drekadi ukusxletis meTodi, dafuZnebuli masalis drekad parametrebsa da kumSvaze simtkicis ganmsazRvrel parametrebs Soris arsebul damokidebulebaze. gazomvis Sedegebi (ZiriTadi) mocemulia cxrili 1-Si da (srulad) samuSaoTa oqmSi (danarTi 4)

miRebuli sidideebi SesabamisobaSia seismomedegi regionebisaTvis daproeqtebuli samrewvelo Senobis rkinabetonis asawyobi elementebisaTvis moTxovnil sidideebTan (ixile cxrili 2).

rkinabetonis asawyob elementebs Soris kavSirebSi fiqsirdeba saSiSi defeqtebi, romelTa gamosworebis gareSe raime saxiT karkasis datvirTva (igulisxmeba teqnologiuri procesis gaSveba, Sekiduli amweebis gamarTva-amoqmedeba da a.S) dauSveblad migvaCnia. konkretulad:

PDF created with pdfFactory trial version www.pdffactory.com

cxrili #1

konstru-qciuli elementi	mdebareoba	simtki-ce kgZ/sm^2	konstruqciuli elementi	mdebareoba	simtki-ce kgZ/sm^2
sveti #1	RerZebis `1~-`N~ kveTa naxazi 3	393	sveti #10	RerZebis `29~-`E~ kveTa naxazi 3	362
sveti #2	RerZebis `1~-`M~ kveTa naxazi 3	296	sveti #11	RerZebis `5~-`B~ kveTa naxazi 1	415
sveti #3	RerZebis `3~-`N~ kveTa naxazi 3	446	sveti #12	RerZebis `2~-`D~ kveTa naxazi 1	424
sveti #4	RerZebis `9~-`K~ kveTa naxazi 3	346	gad.fila #1	RerZebs `4~-`5~ Soris naxazi 1	466
sveti #5	RerZebis `12~-`H~kveTa naxazi 3	439	gad.fila #2	RerZebs `4~-`5~ Soris naxazi 1	461
sveti #6	RerZebis `5~-`A~ kveTa naxazi 3	272	ferma #1; qveda sartyeli	me-5 RerZis gasw. `H~-`E~ Soris naxazi 3	458
sveti #7	RerZebis `5~-`H~ kveTi naxazi 3	426	ferma #2; qveda sartyeli	1 RerZis gasw. `H~-`E~ Soris naxazi 3	484
sveti #8	RerZebis `18~-`E~ kveTa naxazi 3	389	rigeli #1	me-3 RerZis gasw. `A~-`B~ Soris naxazi 1	443
sveti #9	RerZebis `11~-`E~ kveTi naxazi 3	404	rigeli #2	me-5 RerZis gasw. `B~-`C~ Soris naxazi 1	443

- *svetisa da fermis SeerTebis kvanZebSi, fermebi araTanabari sididiT (sigrZe) aris `dayrdnobili~ (ixile suraTi 1.48, 1.50) svetze. mocemul SemTxvevaSi erT svetze ori fermis mierTebis kvanZSi TiToeuli fermis sayrdeni nawilisa da svetis saTavis sakontaqto sigrZe unda Seadgendes 270mm-s. mocemul SemTxvevaSi es sidideebi erTi fermisaTvis aris saWiroze meti, xolo meore fermisaTvis saxifaTod mcire. aRniSnuli defeqtis gamomwvevi mizezia sakvlevi Senobis mSeneblobis dros arasaTanadod Sesrulebuli samontaJo samuSaoebi. aRniSnuli tipis defeqtebi figsirdeba ZiriTadad Sualedur sayrden svetebze. aucilebelia aRniSnuli defeqtebis gamosworeba svetebisa da fermis SeerTebis*

PDF created with pdfFactory trial version www.pdffactory.com

kvanZebis gaZlierebis specialurad momzadebuli saproeqto gadawyvetis Sesabamisad.

cxrili 2

konstruqciuli elementi	betonis minimaluri klasi (marka) kumSvaze simtkicis mixedviT
sveti amwe-meqanizmebis arsebiTi datvirTvis pirobebSi qveda sarTulis sxva danarCeni	 **B25 M(300)** **B25 M(300)** **B15 M(200)**
fermebi	**B30 M(400)**
gadaxurvis wibovani filebi	**B30 M(400)**
rigelebi (winaswari daZabvis gareSe)	**B25 M(300)**

grZivi mimarTulebiT Senobis kavSirebTan mimarTebaSi aRvniSnavT Semdegs:

- *garda svetebis saTaveze (saxuravis mzid arealSi) mowyobili kavSirebisa, konstruqciuli sistemis seismomedegobis uzrunvelsayofad aucilebelia Senobis samive nakveTuris (temperaturul-jdeniTi nakerebiT dayofili ubnebi) Sua bijebSi, iatakidan svetebis saTavemde moewyos jvaredini kavSirebi erTi nakveTurisTvis erT bijSi;*
- *unda gaiwmindos liTonis makavSirebeli elementebis yvela kvanZi liTonis specialuri jagrisis meSveobiT da daifaros antikoroziuli xsnariT.*

sakvlevi Senobis gare Semosva da iataki

sakvlevi Senobis gare Semosva (kedlebi perimetris garSemo) warmodgenilia armirebuli msubuqi betonis mTlianked liani panelebiT, romelTa ganlageba horizontaluria da Senobis zolovani wesiT Semosvis Sesabamisia. rigiTi panelebis (ZiriTadi tipi) zomebia 200X1200X6000mm. panelebiT Sesrulebuli Semosvis kedlebi mowyobilia/muSaoben rogorc TviTmzidi kedlebi. fanjris Riobebi gadaxurulia zRudarebis rigis panelebiT, romlebic Tavis mxriv

PDF created with pdfFactory trial version www.pdffactory.com

dayrdnobilia Suakedlisebis panelebze. panelebi foladis moqnili ankerebiT dakavSirebulia faxverkis svetebsa da faxverkis foladis dgarebTan. niSnulze (>4.40) dayrdnoba Seesabameba iatakis dones da konstruqciulad Sesrulebulia sxvadasxvagvarad: safaris kedlis dgarebze dayrdnobiT; saZirkvlis SemkoWebsa da specialurad mowyobil sayrdenebze dayrdnobiT.

Senoba mTlianad Seuminavia, xolo Sesamini Riobebis umravlesi nawili Sevsebulia aguriT, rac konstruqciulad dauSvebelia.

Semosva mTlianad *mZime mdgomareobaSia*. konkretulad:

- *calkeuli panelebi Camovardnilia (ixile suraTi 1.53, 1.54)*
- *panelebiT Sedgenili TviTmzidi kedlis didi ubnebi (gansakuTrebiT `N~ RerZis gaswvriv. ixile naxazi 3 suraTi 1.40) gamosulia vertikaluri sibrtyidan avardnilia faxverkis svetebidan; darRveulia maTi mdebareobis mdgradoba, rac gare perimetrze maTi myisieri vardniT SeiZleba dasruldes;*
- *panelebis umetesoba dazianebulia mocilebulia betonis damcavi fena; Cans armaturis korodirebuli Reroebi da badeebi;*

zemoT aRniSnulis gaTvaliswinebiT migvaCnia:

- *sakvlevi Senobis gare Semosvis mTlianad moxsna panelebis demontaJis specialurad momzadebuli saproeqto gadawyvetis Sesabamisad da axl.is mowyoba momavali misi (Senobis) daniSnulebis Sesabamisad. am ukanaskneli s ganxorcielebisas gaTvaliswinebul unda iqnes Senobis Siga areal is temperaturuli da tenianobis reJimebi, raionis klimaturi pirobebi.*

niSnulze (>4.40) SenobaSi mowyobilia *betonis iataki* `N~ da `E~ RerZebs Soris (ixile suraTi 1.41, 1.42), amave arealSi `12~ da `29~ RerZebs Soris mowyobilia specialuri saZirkvlebi: unda vivaraudoT Senobis pirveladi daniSnulebis Sesabamisi dinamikuri zemoqmedebis mqone danadgarebisaTvis (ixile suraTi 1.47); `E~ da `A~ RerZebs Soris rkinabetonis filebi dafarulia msubuqi betonis moWimviT.

iataki `N~ _ `E~ da `9~ _ `14~ RerZebs Soris arealSi mZimed dazianebulia _ aris Cavardnebi da Rrmulebi. *aRniSnulis gamomwvevi mizezia mSeneblobis periodSi Cayrili gruntis arasaTanadod gamkvriveba; betonis iatakis arasaTanadod mowyoba.*

PDF created with pdfFactory trial version www.pdffactory.com

Senobis reabilitaciis SemTxvevaSi, masSi dagegmili teqnologiuri procesis Sesabamisad unda moxdes *rkinabetonis iatakis mowyoba*.

- *rkinabetonis iataki unda moewyos deformaciuli nakerebiT erTmaneTisagan gamijnuli, yvelaze meti 8 _ 12m zRvrebSi sigrZis mqone kvadratuli/sworkuTxa rkinabetonis filebiT; fuZe grunti rkinabetonis filis qveS saTanadod unda gamkvrivdes meqanizebuli wesiT, masSi Caitkepnos RorRis fena da masze moewyos betonis momzadeba (klasi B7,5). rkinabetonis filis zomebi, misi sisqe, armireba, Casayreli RorRis simsxo ganisazRvreba datvirTvis yoveli konkretuli mniSvnelobisTvis. arasawarmoo ubnebisaTvis saangariSo datvirTviT 500kgZ/m^2-mde minimaluri sisqe aiReba 6sm, klasi (B15), erT doneSi armirebiT Ф6 A –I . 1000kgZ/m2 da zemoT minimaluri sisqe aiReba 10sm, or doneSi armorebiT datvirTvis Sesabamisad. zemoT aRniSnuli Seexeba mxolod statikur datvirTvebs gruntis fuZeze. dinamikur datvirTvebze gaangariSeba (Sesabamisad am danadgarebisTvis saZirkvlis mowyoba) ki unda moxdes yoveli konkretuli meqanizmisTvis individualurad maTi sapasporto monacemebis Sesabamisad (ЦНИИСК им. В.А. Кучеренко. Инструкция по расчёту несущих конструкции промышленных зданий и сооружений на динамические нагрузкию М.1979)*

sakvlevi Senobis saxuravi (dafarva)

sakvlevi Senobis saxuravis dafarva (mzidi nawilis Sesaxeb ixile zemoT. suraTi danarTi 3) Sesrulebulia rulonuri masaliT, gasaTbobi samrewvelo SenobisaTvis arsebuli standartuli sqemiT _ sxvadasxva daniSnulebis fenebis erToblioba, Sesabamisad.

- *arsebuli mdgomareobiT saxuravis dafarva saerTod veRar pasuxobs saeqsploatacio moTxovnebs. Senobis raebilitaciis SemTxvevaSi is xelmeored/Tavidan aris mosawyobi reabilitirebul SenobaSi dagegmili teqnologiuri procesebis Tanmdevi temperaturuli reJimebisa da garemo klimaturi pirobebis gaTvaliswinebiT.*

PDF created with pdfFactory trial version www.pdffactory.com

saxuravis dafarvis nawilad moiazreba Suqfaranis karkasis Seumosva (gverdiTi Seminva) da saxuravi. Suqfarani Seuminavia – naleqi pirdapir xvdeba SenobaSi; Suqfaranis saxuravi Sesrulebulia moTuTiebuli Tunuqis gofrirebuli furclebiT, romlebic srulad uvargisia eqspluataciisaTvis _ furclebi TiTqmis mTlianad daxvretilia. amrigad *mTlianad axlidan aris mosawyobi Suqfarnis Semosva da saxuravi*

tixrebi; specialuri daniSnulebis kibeebi

sakvlevi Senobis niSnulze (>4,40) mowyobilia sxvadasxva simaRlis tixrebi, romlebiTac Senobis mTliani samrewvelo areali dayofilia sxvadasxva sididis saTavsoebad. zogadad samrewvelo SenobebSi tixrebis ganlageba, tipi (asawyob-dasaSleli, stacionaruli), simaRle da masala ganisazRvreba masSi warmarTuli teqnologiuri procesebiT. imis gaTvaliswinebiT rom samrewvelo SenobaTa saTavsoebis simaRle didia, mTel maT simaRleze asuli tixrebis mosawyobad mimarTaven karkasul gadawyvetebs.

mocemul SemTxvevaSi gvaqvs rogorc asawyob-dasaSleli, aseve stacionaruli, mTeli saTavsos simaRleze asuli tixrebi. maT saSen masalad ZiriTadad gamoyenebulia silikaturi aguri.

- *`E~ da `29~ RerZebis (ixile naxazi 3, suraTebi 1.55, 1.57) gaswvriv da mimdebared arsebuli saTavsos mTel simaRleze asuli tixrebis mdgomareoba avariulia. arsebobs maTi myisieri Camoqcevis saSiSroeba.*

Senobis axali funqciiT reabilitaciis SemTxvevaSi, tixrebis moxsna mainc saWiro gaxdeba, imdenad ramdenadac is unda `moergos~ axal teqnologiur process. amdenad:

- *Tu gaviTvaliswinebT Sesabamisad aRniSnuli or mizezs, agrTve imas rom seismuri zemoqmedebis dros samrewvelo SenobebSi tixrebi yvelaze metad ziandeba, saWirod miviCnevT ganxorcieldes yvela tixris demontaJi.*

qveda doneze (>0.00) arsebuli areali `4~ da `22~ RerZebs Soris aseve tixrebiT dayofilia calkeul saTavsoebad. tixrebis umetesi nawilis

PDF created with pdfFactory trial version www.pdffactory.com

teqnikuri mdgomareoba damakmayofilebelia; *`4~ da `6~ RerZebs Soris mdebare tixrebi ki imdenad aris dazianebuli (ixile suraTi 1.32-1.36) roman unda gaZlierdes, an unda moxdes maTi demontaJi.* dazianebis mizezia miTiTebul arealSi gruntis jdena.

mocemul SemTxvevaSi specialuri daniSnulebis kibeebs vuwodebT im kibeebs romelTa saSualebiTac Senobis Signidan SeiZleba moxvedra safarSi an qveda doneze (niSnuli >0.00). yvela aRniSnuli kibe gadawyvetilia erTi da igive konstruqciuli sqemiT _ betonis safexurebi foladis Canebze. *es konstruqciebi korodirebulia, isini unda gaiwmindos da daifaros antikoroziuli saSualebebiT.*

sakvlevi Senobis garSemo arsebuli arealis mdgomareobis Sesaxeb

sakvlevi Senoba mdebareobs mcired daferdebul (didi ganfenis Sesabamisad zogan metad, zogan naklebad) gaSlil adgilze. misi gare perimetris arc erTi mxridan mis momijnaved ar aris Senoba/nageboba im manZilze, romelsac SeuZlia arsebiTi gavlena moaxdinos sakvlevi Senobis muSaobis pirobebze.

arsebiTi gavlenas sakvlevi Senobis muSaobis teqnikur mdgomareobaze amJamad axdens da perspeqtivaSi SenobisaTvis sawarmoo funqciis aRdgenas *praqtikulad SeuZlebels gaxdis (Tu ar gamosworda)* is mdgomareoba rac Seqmnilia uSualod Senobis gare perimetris garSemo.

`1~ da `N~ RerZebis kveTidan (ixile naxazi 3) ganivi da gansakuTrebiT ki grZivi mimarTulebiT `N~ RerZis gaswvriv, aris Seuvsebeli, ukve mcenareuli safariT dafaruli ormoebi; agreTve amave arealSi gamodis safaris ventilaciisaTvis saWiro haersatarebis didi diametris liTonis milebis mosawyobi tranSeebi; uSualod Senobis kedlis momijnaved aris Casavleli safarSi, romelic mTlianad daSlilia da darCenilia mxolod kibis marSebis foladis Canebi. aRniSnul ormoebSi/naTxarebSi da agreTve nayar gruntze intensiurad aris ganviTarebuli mcenareuli safari; masSi aris teqnikuri detalebisa da samSeneblo masalebis narCenebi (ixile suraTebi 1.1, 1.3, 1.61-1.68).

PDF created with pdfFactory trial version www.pdffactory.com

`29~ RerZis gaswvriv gruntis zedapiri mousworebeli da mkveTrad daferdebulia, rac gamowveulia pirveli donis (niSnuli >-1,90 ixile naxazi 2) mowyobis dros gruntis amoRebisa da samuSaos dasrulebis Semdeg arealis saTanadod ar damuSavebis gamo. daferdebis ZirSi, Senobis kuTxeSi (`A~ da `29~ RerZebis kveTa) agreTve warmoqmnilia ormo, sadac grovdeba naleqi da Camdinare wylebi da auaresebs Senobis isedac mZime teqnikur mdgomareobas (ixile suraTi 1.17, 1.18).

`A~ RerZis gaswvriv, Senobis uSualod momijnaved ara, magram mciredi (5 . . . 7m) dacilebiT, mis paralelurad aris sicarieleebi, mcenareuli safariTa da samSeneblo masalebis narCenebiT dafaruli tranSeebi, sxvadasxva saxis komunikaciebis mosawyobi mitovebuli ormoebi.

aRniSnuli mdgomareoba upirveles yovlisa gamowveulia im garemoebiT rom Senoba dausrulebelia, aRniSnuli mdgomareoba ki ganapirobebs imas rom:

- *mudmivad uaresdeba Senobis mdgomareoba mis fuZeSi naleqis moxvedris gamo;*
- *gareT gamoirecxeba safaris gadaxurvis zedapirsa da Senobis iatakis dones Soris Cayrili grunti, rac safrTxes uqmnis mzid konstruqciebs (ixile suraT 1.9-1.11);*
- *gverdiT fasadze (`29~ RerZis gaswvriv) Zlier damreci da damuSavebis Semdeg mitovebuli ferdobi (ixile suraTi 1.15, 1.16) irecxeba da mis ZirSi (Senobis kuTxeSi `A~ da `29~ RerZebis kveTa) dagrovili naleqi intensiurad Caedineba fuZeSi;*
- *uSualod Senobis gaswvriv (RerZi `N~-is gaswvriv, agreTve RerZi `A~-s calkeul momijnave ubnebze, ixile zemoT, fexiT gadaadgileba garTulebulia, calkeul monakveTebze saSiSi, xolo sxvadasxva mobiluri samSeneblo/sawarmoo teqnikiT gadaadgileba ki SeuZlebeli.*

imisaTvis rom Senobis teqnikuri mdgomareoba kidev ar damZimdesSenobis Semdgom sareabilitacio samuSaoebSi aucileblad gaTvaliswinebul unda iqnes:

- *perimetris momijnave arealis mosworeba;*
- *uSualod Senobis garSemo Semonakirwylis mowyoba;*

PDF created with pdfFactory trial version www.pdffactory.com

- *unda daifaros an funqcionaluri datvirTviT usafrTxo gaxdes tranSeebi da mitovebuli ormoebi*

samoqalaqo Tavdacvis obieqti safari

zemoT aRvniSnavdiT imis Sesaxeb rom sakvlev Senobas aqvs winaswar agebuli, CaSenebuli tipis samoqalaqo Tavdacvis obieqti _ safari (ixile zemoT). safari mdebareobs uSualod Senobis nawilis qvemoT (ixile naxazi 4, 6; suraTi danarTi 2) da Sedgeba winaswaragebuli ormagi daniSnulebis mqone safaris komponentebisagan: saTavso TavSesafarisaTvis (ixile suraTi 2.4, 2.5, 2.6); saTavso savetilacio/filtraciuli aRWurvilobis ganTavsebisaTvis (ixile suraTi 2.7, 2.8, 2.11, 2.12); sankvanZebi (ixile suraTi 2.9, 2.10); Casasvlel/amosasvlebi (ixile suraTi 2.1, 2.2, 2.3);

konstruqciulad safari gadawyvetilia rkinabetonis asawyob-monoliTuri konstruqciebiT (Серия У-01-01 Унифицированние сборно-монолитные конструкции заглубленных помещений с перекрытием балочного типа). gvaqvs rkinabetonis monoliTuri svetebi; rkinabetonis asawyobi kedlebi da safaris gadaxurva, monoliTuri rkinabetonis CanarTebiT. zemoT xsenebul saTavsoebad safari dayofilia blokisa da aguris tixrebis meSveobiT. safaris mzidi elementebis – svetebis biji aRebulia e.w. `gamsxvilebuli samrewvelo modulis~ (1,5M) –is jeradi. Sesabamisad gvaqvs biji 6m. safaris simaRle iatakidan filis qveda zedapiramde Seadgens 3m-s, xolo rigelis qveda zedapiramde – 2,4m-s.

safaris mzidi konstruqciuli nawili gaangariSebulia datvirTvis gansakuTrebul SeTanwyobaze. CaRrmavebuli Senobis klasis Sesabamisi gansakuTrebuli datvirTvis garda, xsenebul SeTanwyobaSi agreTve gaTvaliswinebulia: konstruqciis sakuTari wona; Cayrili gruntisa da Senobis iatakis wona; droebiTi normatiuli datvirTva gadaxurvaze (safaris klasis mixedviT aiReba 2,5 . . . 5tZ/m^2); gverdiTi dawneva kedlebze gruntisagan kuTri woniT 1,8t/m^3, Siga xaxunis kuTxiT _ 18^0)

PDF created with pdfFactory trial version www.pdffactory.com

safarSi moxvedra SesaZlebelia gare (ixile suraTi 2.1, 2.2) da Siga CasasvlelebiT, romelTa meSveobiTac Tavdapirvelad vxvdebiT winatamburSi, tamburis gavlis Semdeg ki TviTon safarSi.

mTliand safarisa da misi mzidi konstruqciuli elementebis Sesaxeb aRvniSnavT Semdegs:

- *safaris mzid konstruqciul elementebSi ar fiqsirdeba arsebiTi _ daniSnulebis Sesabamisad eqspluataciaze gavlenis momxdeni dazianebebi. Tu agreTve gaviTvaliswinebT zemoT aRniSnuls _ rasididis datvirTvaze aris is gaangariSebuli, naTeli xdeba rom Zalovani zemoqmedebebis mimarT misi konstruqciuli elementebis medegoba didi maragiT aris uzrunvelyofili;*
- *Senobis reabilitaciis SemTxvevaSi, safaris Tavze miwis Cayris arealSi, specialuri gaangariSebis gareSe dauSvebelia iseTi teqnologiuri procesis dagegmva, romelic moiTxovs dinamikuri efeqtebis mqone danadgarebisaTvis specialuri saZirkvlebis mowyobas;*
- *amJamad safari aris faqtiurad mitovebuli ufunqciod darCenili areali, sadc erTi gare Casasvlelidan (ixile suraTi 2.1) moxvedra Tavisufalia; ventilaciis/filtraciis danadgarebi da haersatarebi nawilobriv daSlilia, didwilad korodirebulia da Semdgomi eqspluataciisaTvis TiTqmis gamousadegari. mocemul etapze sareabilitacio samuSaoebis dawyebamde aucilebelia sardafSi SesaRwevi Riobebis daketva saventilacio qselis minimalur donezemowesrigebasTan erTad.*

PDF created with pdfFactory trial version www.pdffactory.com

danarTi 1
sakvlevi Senoba _ saerTo xedebi; konstruqciuli elementebi, kavSirebi da detalebi: areali Senobis perimetris gaswvriv da mimdebared


suraTi 1.1


suraTi 1.2


suraTi 1.3


suraTi 1.4


suraTi 1.5


suraTi 1.6

PDF created with pdfFactory trial version www.pdffactory.com

danarTi 1
(gagrZeleba)



suraTi 1.7



suraTi 1.8



suraTi 1.9



suraTi 1.10



suraTi 1.11



suraTi 1.12

PDF created with pdfFactory trial version www.pdffactory.com

danarTi 1
(gagrZeleba)



suraTi 1.13



suraTi 1.14



suraTi 1.15



suraTi 1.16



suraTi 1.17



suraTi 1.18

PDF created with pdfFactory trial version www.pdffactory.com

danarTi 1
(gagrZeleba)



suraTi 1.19



suraTi 1.20



suraTi 1.21



suraTi 1.22



suraTi 1.23



suraTi 1.24

PDF created with pdfFactory trial version www.pdffactory.com

danarTi 1
(gagrZeleba)


suraTi 1.25


suraTi 1.26


suraTi 1.27


suraTi 1.28


suraTi 1.29


suraTi 1.30

PDF created with pdfFactory trial version www.pdffactory.com

danarTi 1
(gagrZel eba)


suraTi 1.31


suraTi 1.32


suraTi 1.33


suraTi 1.34


suraTi 1.35


suraTi 1.36

PDF created with pdfFactory trial version www.pdffactory.com

danarTi 1
(gagrZeleba)


suraTi 1.37


suraTi 1.38


suraTi 1.39


suraTi 1.40


suraTi 1.41


suraTi 1.42

PDF created with pdfFactory trial version www.pdffactory.com

danarTi 1
(gagrZeleba)



suraTi 1.43



suraTi 1.44



suraTi 1.45



suraTi 1.46



suraTi 1.47



suraTi 1.48

PDF created with pdfFactory trial version www.pdffactory.com

danarTi 1
(gagrZeleba)



suraTi 1.49



suraTi 1.50



suraTi 1.51



suraTi 1.52



suraTi 1.53



suraTi 1.54

PDF created with pdfFactory trial version www.pdffactory.com

danarTi 1
(gagrZeleba)



suraTi 1.55



suraTi 1.56

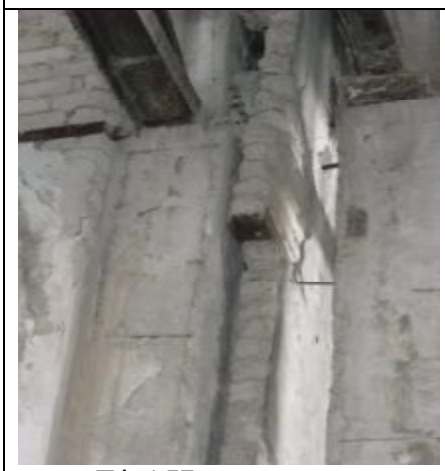

suraTi 1.57



suraTi 1.58



suraTi 1.59



suraTi 1.60

PDF created with pdfFactory trial version www.pdffactory.com

danarTi 1
(gagrZeleba)



suraTi 1.61



suraTi 1.62



suraTi 1.63



suraTi 1.64



suraTi 1.65



suraTi 1.66

PDF created with pdfFactory trial version www.pdffactory.com

danarTi 1
(gagrZeleba)



suraTi 1.67



suraTi 1.68

PDF created with pdfFactory trial version www.pdffactory.com

danarTi 3
saxuravisa da Suqfarnis elementebi


suraTi 3.1

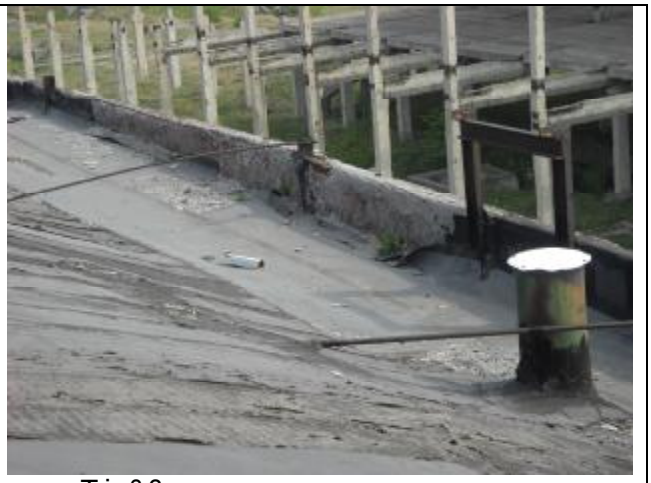
suraTi 3.2


suraTi 3.3


suraTi 3.4


suraTi 3.5


suraTi 3.6

PDF created with pdfFactory trial version www.pdffactory.com

danarTi 5
(gagrZeleba)


suraTi 3.7


suraTi 3.8


suraTi 3.9


suraTi 3.10


suraTi 3.11

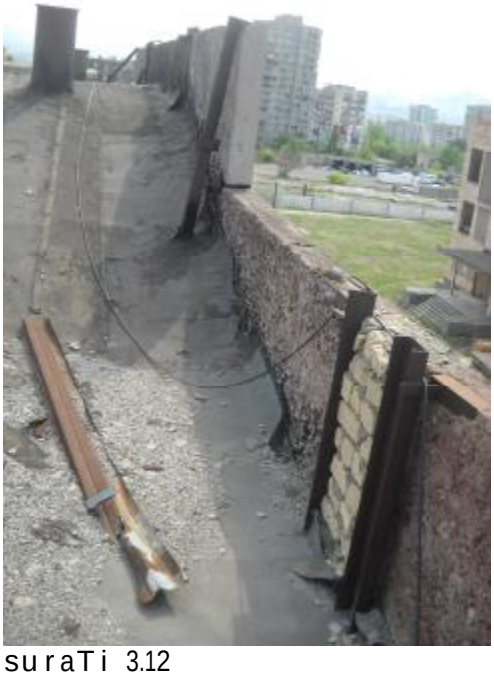
suraTi 3.12

PDF created with pdfFactory trial version www.pdffactory.com

danarTi 5
(gagrZeleba)



suraTi 3.13



suraTi 3.14



suraTi 3.15



suraTi 3.16



suraTi 3.17



suraTi 3.18

PDF created with pdfFactory trial version www.pdffactory.com

sakv l evi Senobis gegma -1.90, 0.00

f ragmenti 1

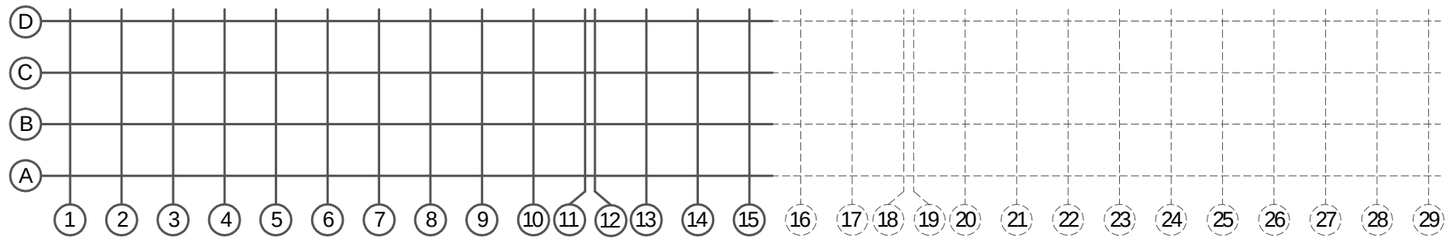

SeniSvna
naxazi ikiTxeba daskvnasTan da
naxzazi 2-Tan erTad

1 - 1

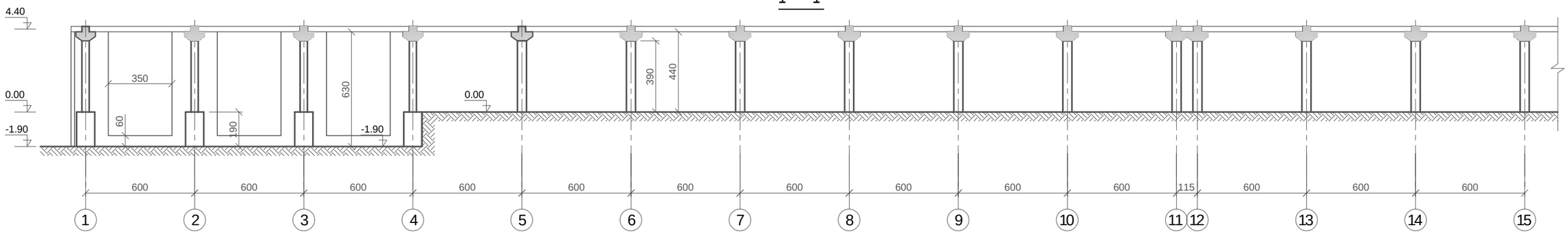

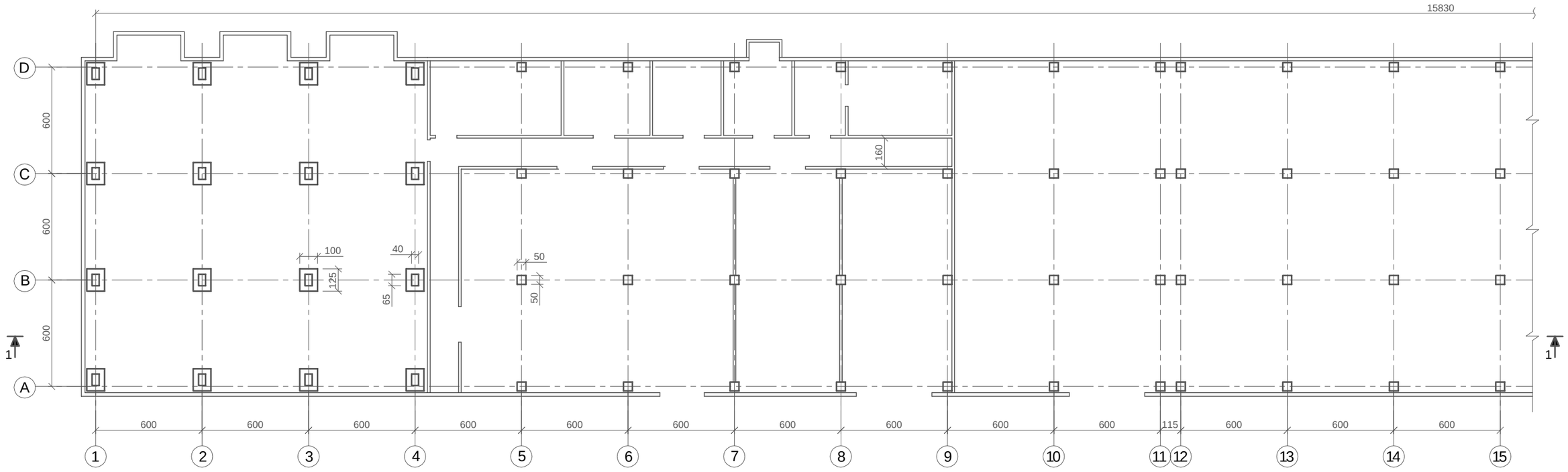

daxaza		i l iuxini		q.Tbi l isi, diRomi Sps `o j T~ dausru l ebe l i samrewve l o Senoba	nax.
Seamowma		esaZe			1

PDF created with pdfFactory trial version www.pdffactory.com

sakv l evi Senobis gegma -1.90, 0.00

f r a g m e n t i 2

SeniSvna
naxazi ikiTxeba daskvnasTan da
naxzazi 1-Tan erTad

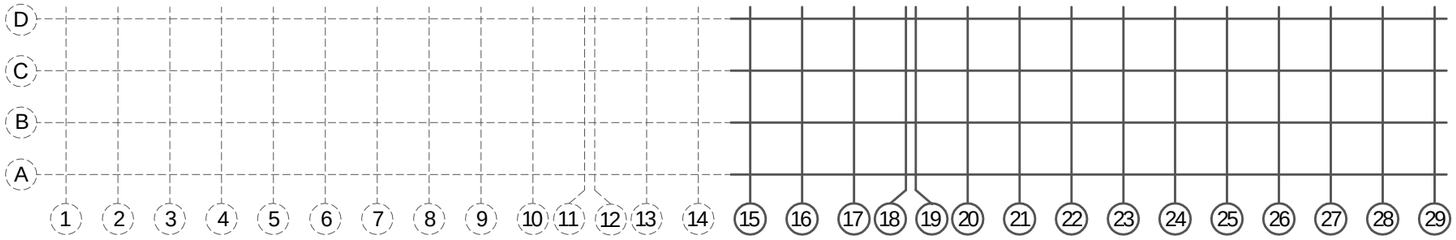

2 - 2

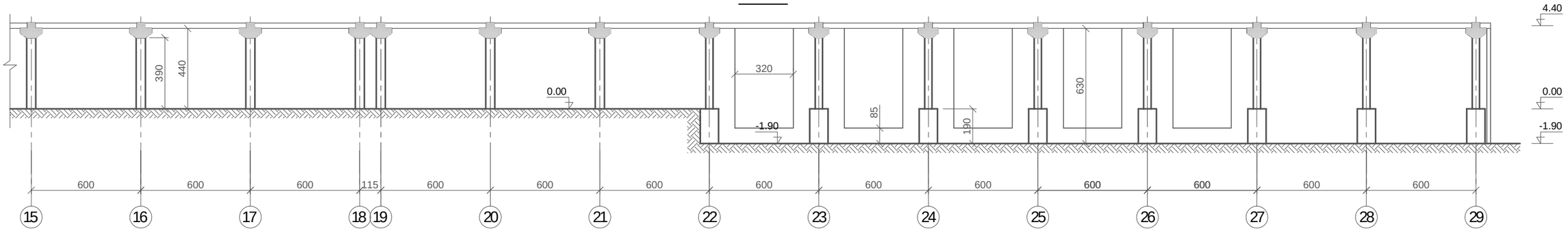

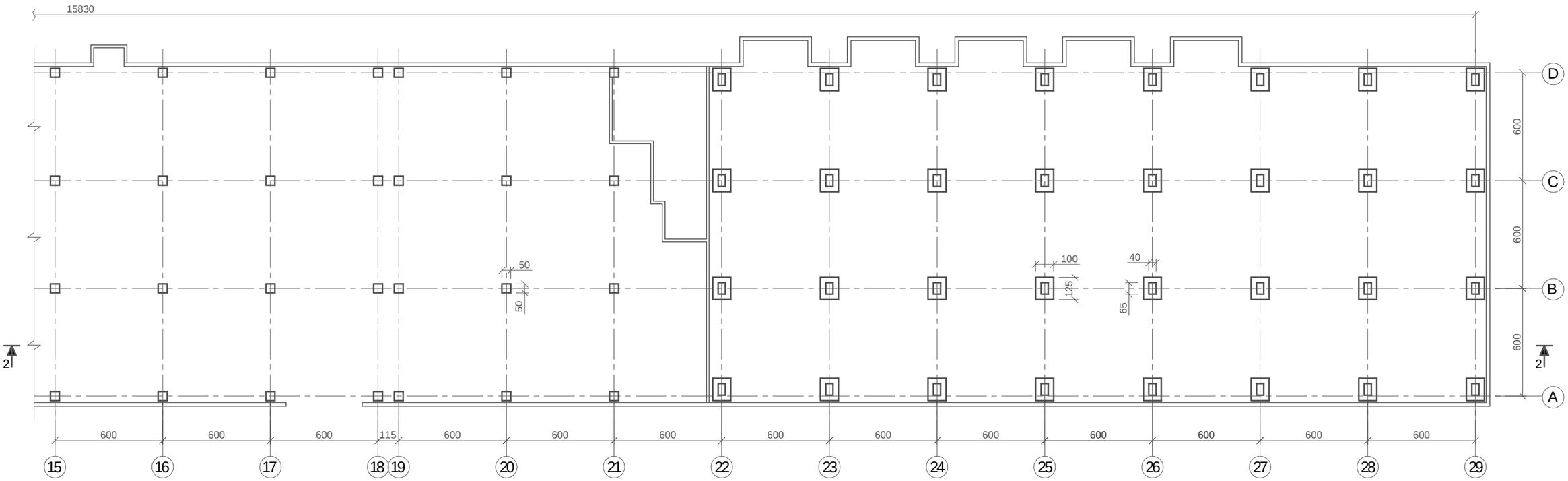

daxaza		i l iuxini		q.Tbi l isi, diRomi Sps `oj T~ dausru l ebe l i samrewve l o Senoba	nax.
Seamowma		esaZe			2

PDF created with pdfFactory trial version www.pdffactory.com

SeniSvna
naxazi ikiTxeba daskvnasTan da
naxzazi 4-Tan erTad

sakv l evi Senobis gegma 4.40

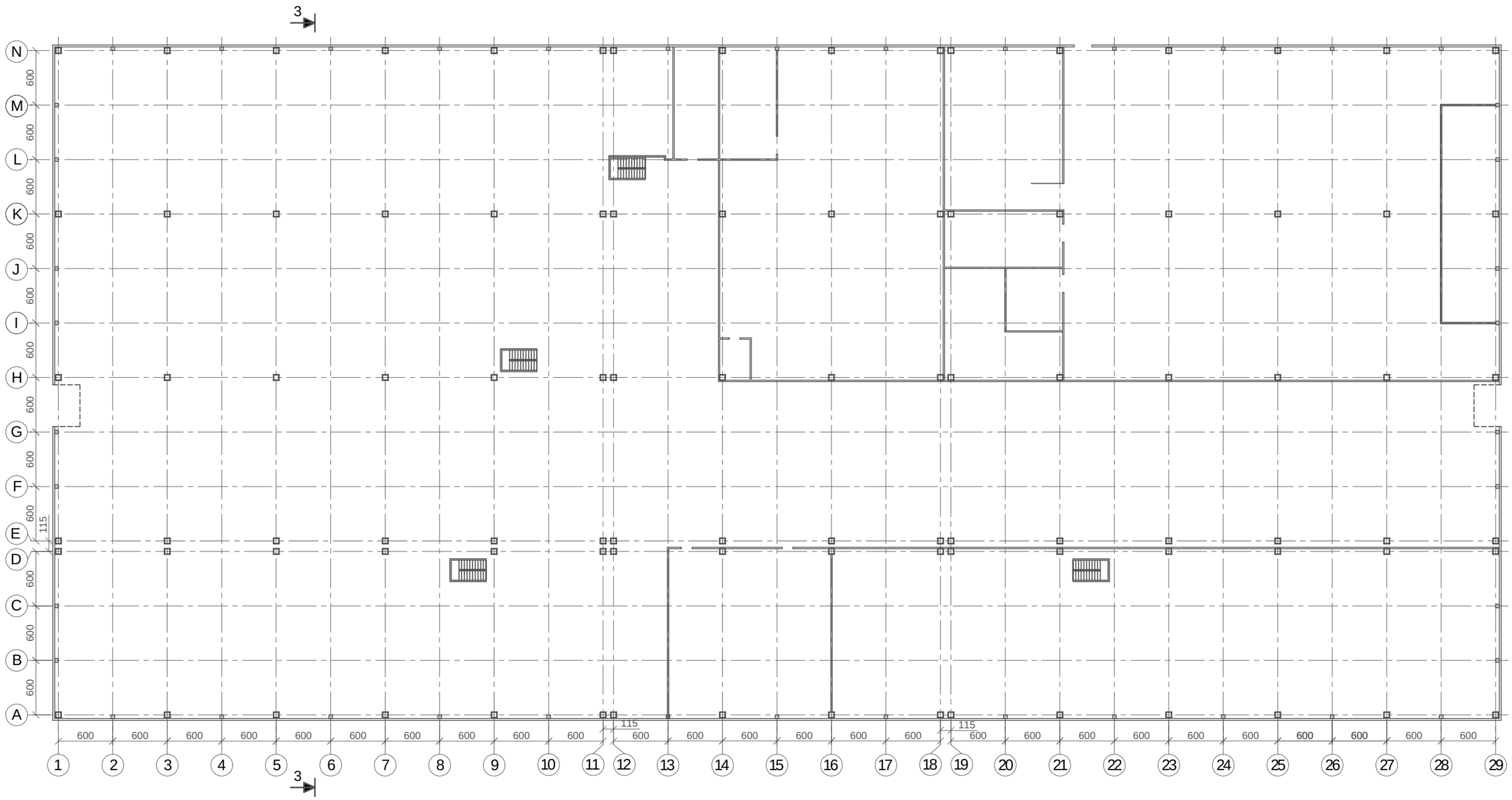

daxaza		i l iuxini		q.Tbi l isi, diRomi Sps `o j T~ dausru l ebe l i samrewve l o Senoba	nax.
Seamowma		esaZe			3

PDF created with pdfFactory trial version www.pdffactory.com

SeniSvna
naxazi ikiTxeba daskvnasTan da
naxzazi 3, 5 erTad

3 - 3

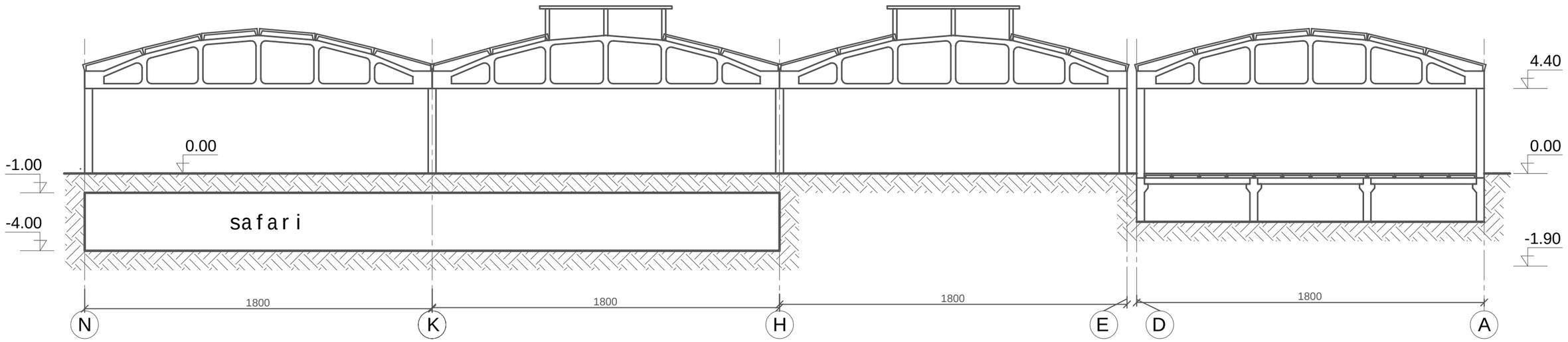

saxuravis mzidi elementebis da grZivi kavSirebis sqemebi

A

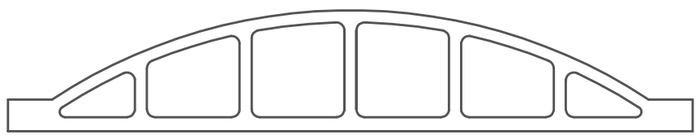

B

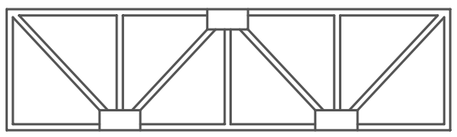

C



D



daxaza		iliuxini		q.Tbilisi, diRomi Sps `ojT~ dausrulebeli samrewvelo Senoba	nax.
Seamowma		esaZe			4

PDF created with pdfFactory trial version www.pdffactory.com

saxuravis mzidi elementebis A da grZivi
kavSirebis B, C , D , ganlagebis gegma

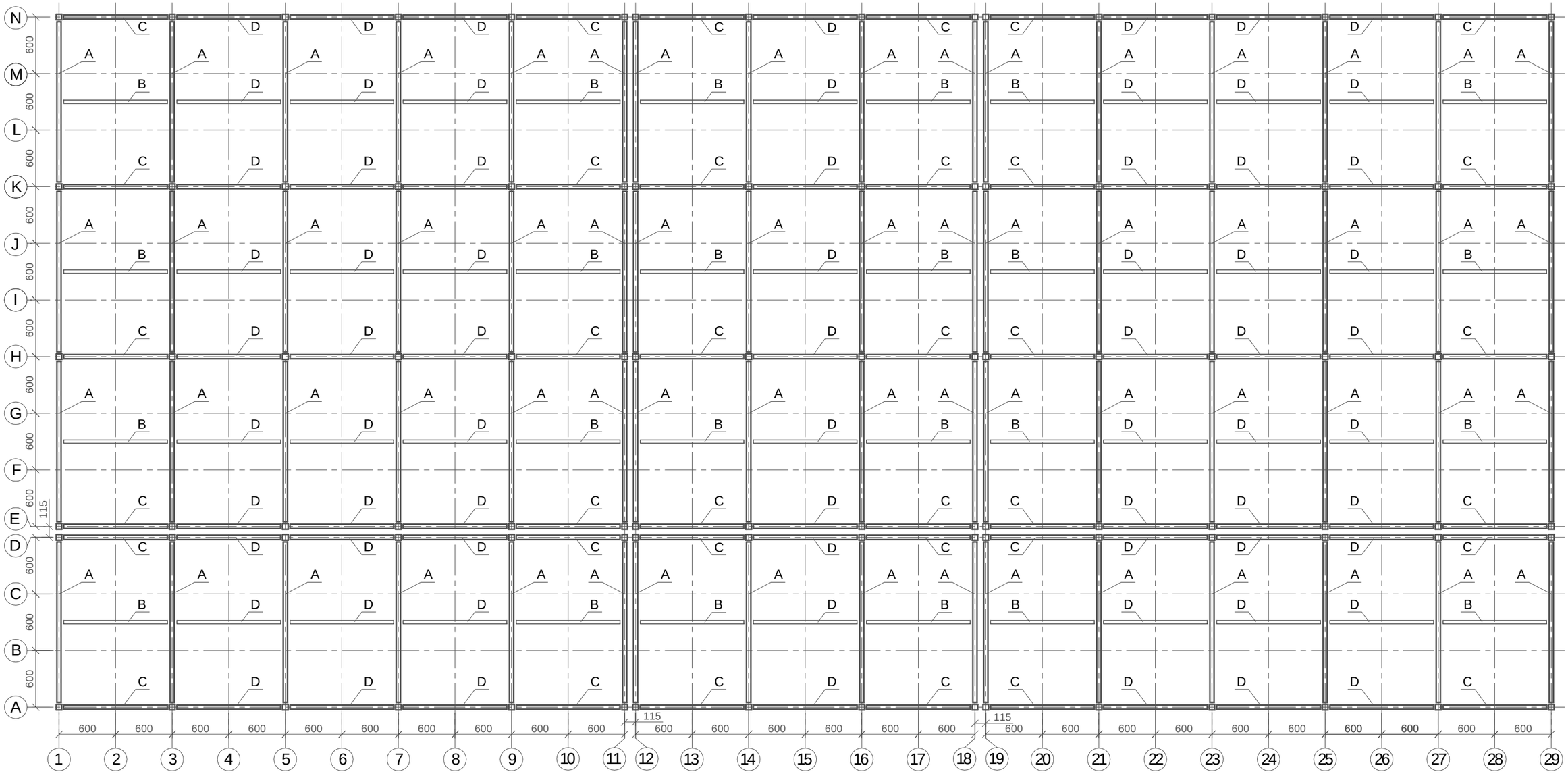

SeniSvna
naxazi ikiTxeba daskvnasTan da
naxzazebTan 3, 4 erTad

daxaza		iliuxini		q.Tbilisi, diRomi Sps `ojT~ dausrulebeli samrewvelo Senoba	nax.
Seamowma		esaZe			5

PDF created with pdfFactory trial version www.pdffactory.com

safaris mzidi elementebis ganlagebis gegma

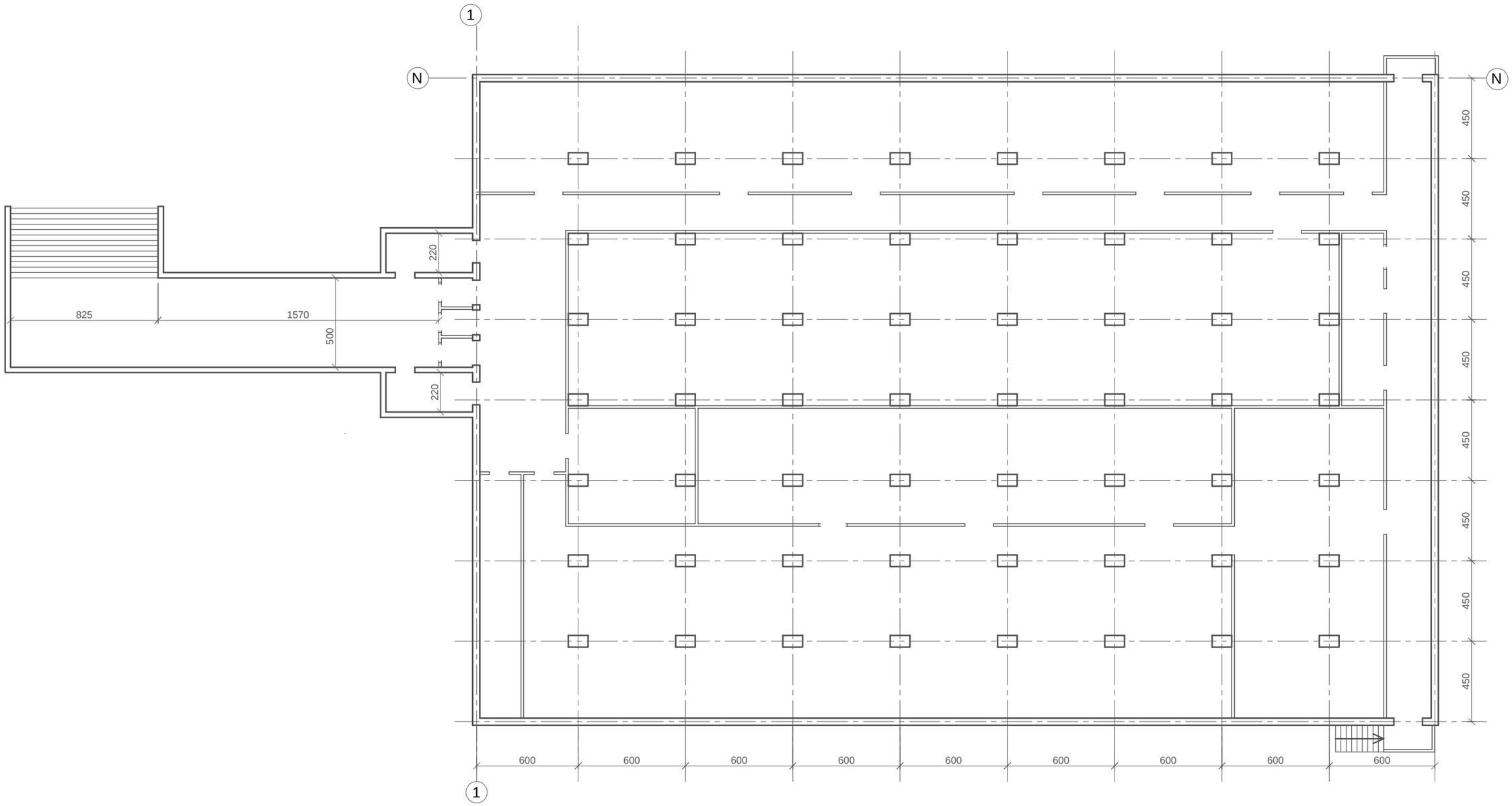

SeniSvna
naxazi ikiTxeba daskvnasTan da
naxazTan 3 erTad

daxaza		iliuxini		q.Tbilisi, diRomi Sps `ojT~ dausrulebeli samrewvelo Senoba	nax. 6
Seamowma		esaZe			

PDF created with pdfFactory trial version www.pdffactory.com