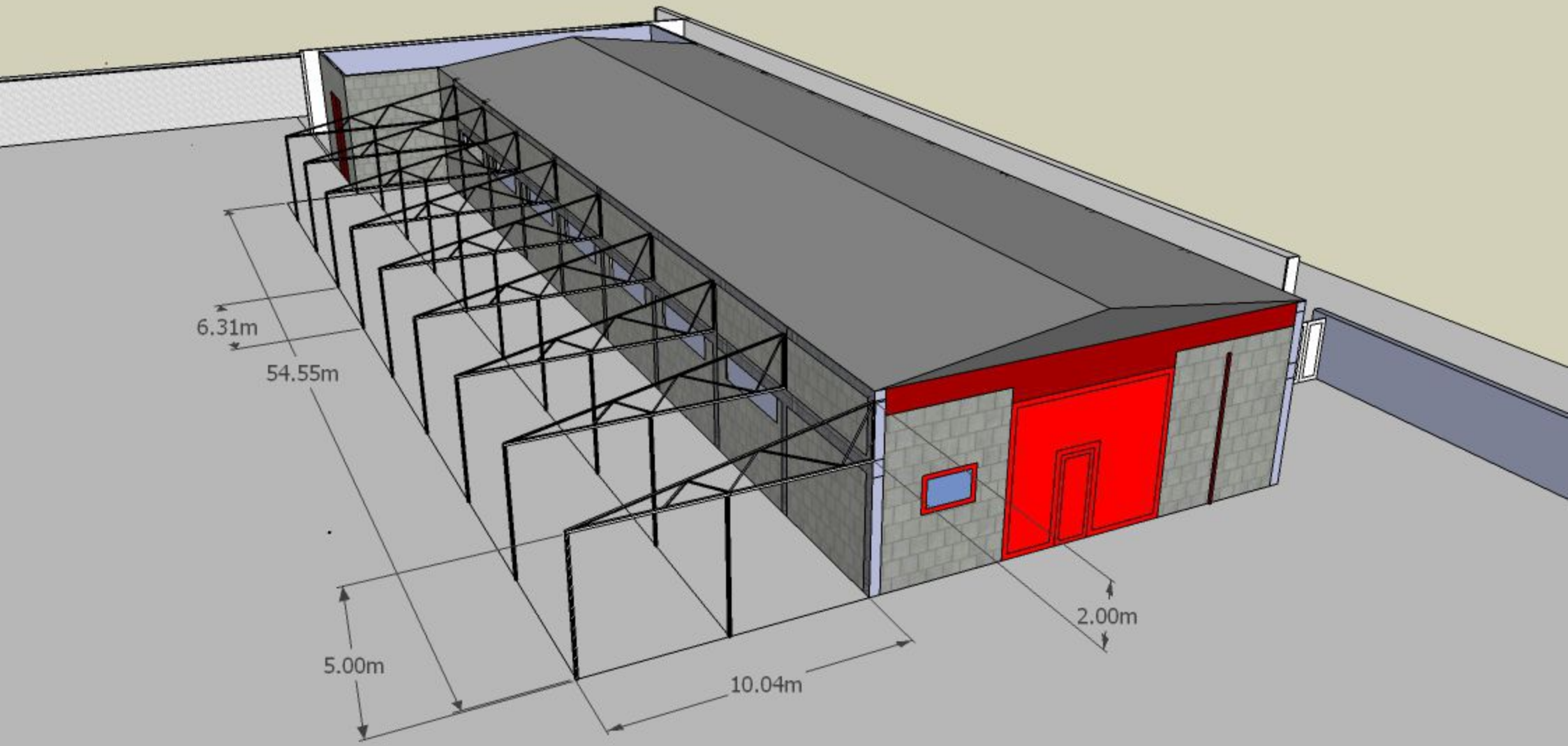
6.31m
54.55m
5.00m
10.04m
2.00m

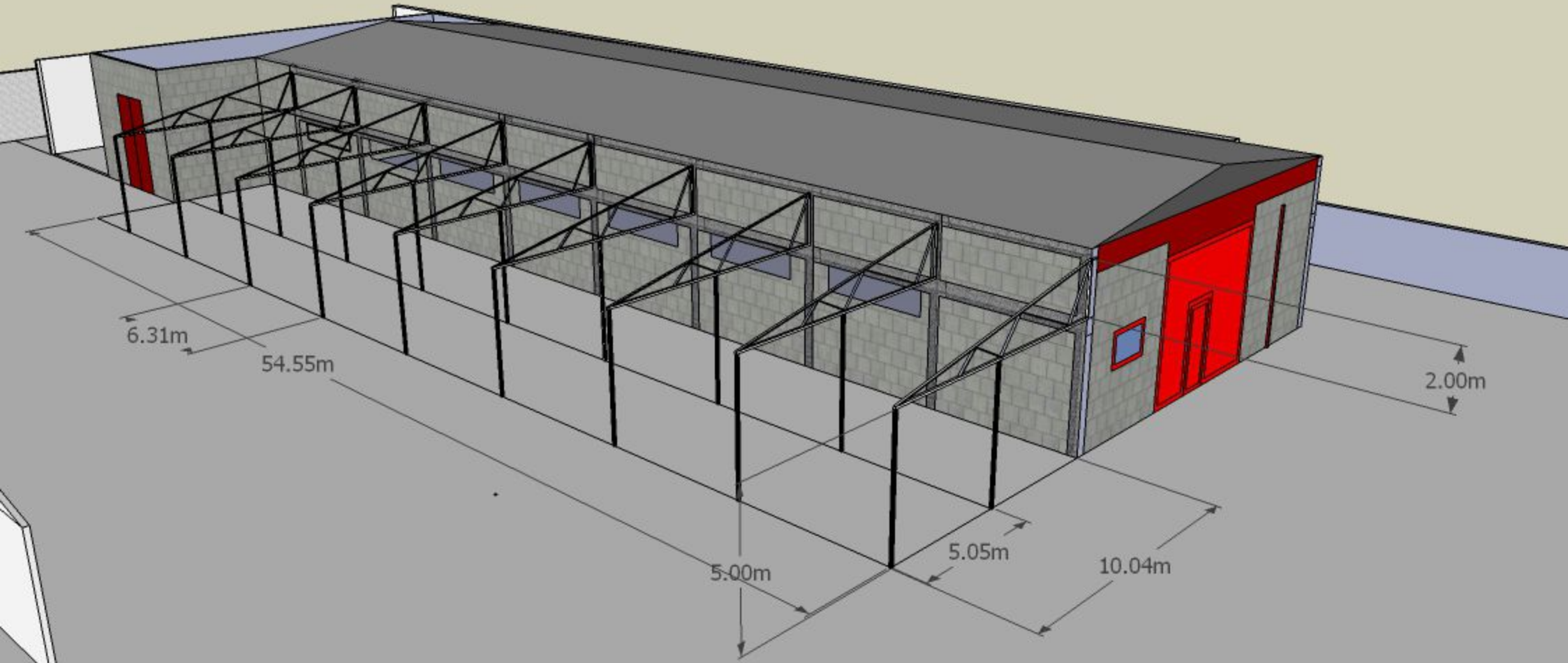
6.31m
54.55m
2.00m
5.00m
5.05m
10.04m

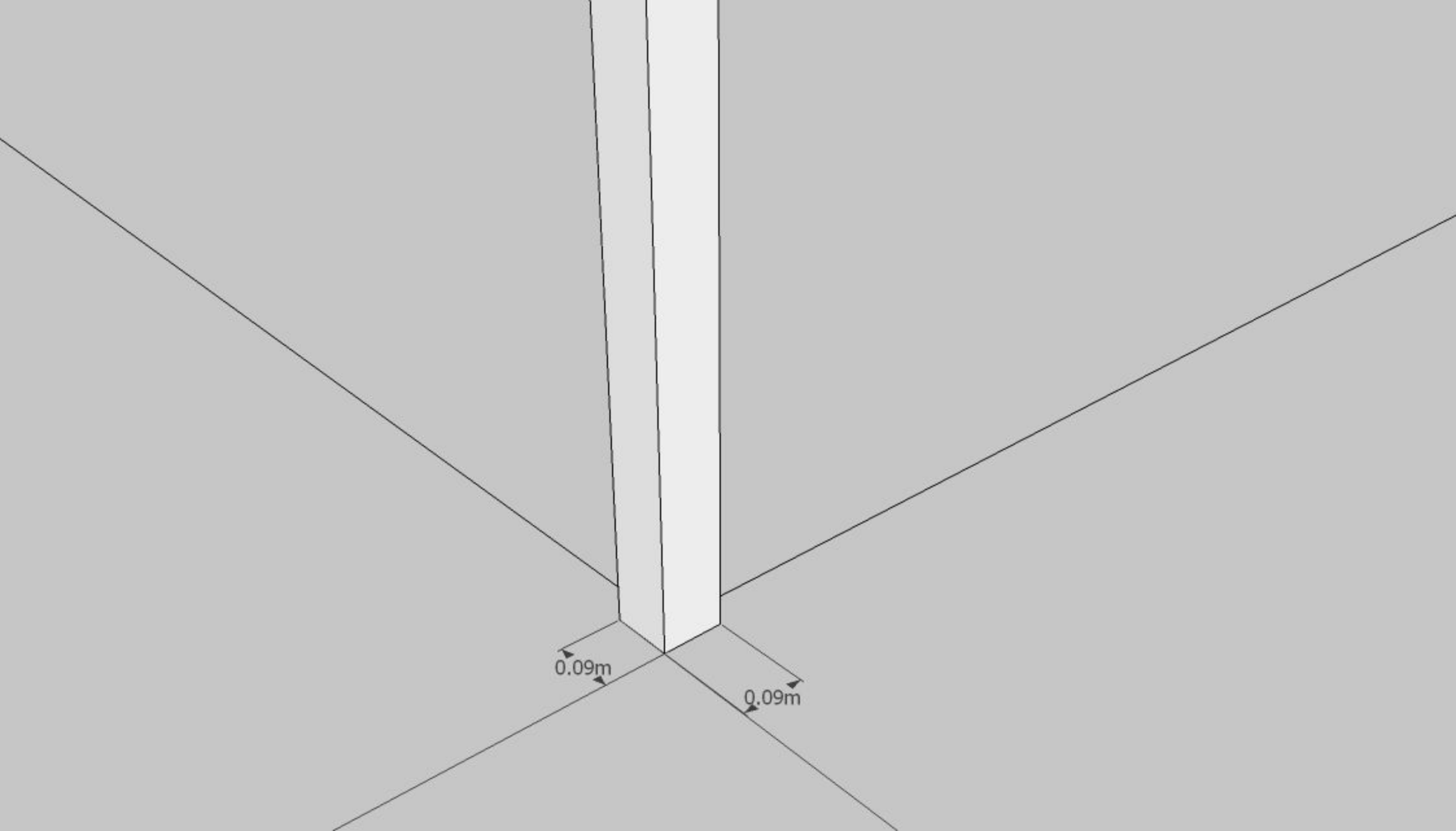
0.09m
0.09m


6.31m
2.00m
5.00m
10.04m