Knauf Drywall
P O Box 133
Sittingbourne
Kent ME10 3HW
Tel: 01795 424499 Fax: 01795 428651
e-mail: technical@knauf.co.uk
website: www.knaufdrywall.co.uk

BBA APPROVAL INSPECTION TESTING CERTIFICATION
TECHNICAL APPROVALS FOR CONSTRUCTION

Agrément Certificate
09/4633
Product Sheet 1

KNAUF CLADDING SYSTEM

KNAUF AQUAPANEL EXTERIOR SYSTEM

PRODUCT SCOPE AND SUMMARY OF CERTIFICATE

This Certificate relates to the Knauf Aquapanel Exterior System, for use as a ventilated exterior wall panel system on timber-frame and steel-frame buildings.



AGRÉMENT CERTIFICATION INCLUDES:

- factors relating to compliance with Building Regulations where applicable
- factors relating to additional non-regulatory information where applicable
- independently verified technical specification
- assessment criteria and technical investigation
- design considerations
- installation guidance
- regular surveillance of production
- formal three-yearly review.

KEY FACTORS ASSESSED

Strength and stability — the system can accept surface loadings likely to be met in the UK (see section 5).

Behaviour in relation to fire — Aquapanel Exterior Cement Board has a Class A1 rating in accordance with EN 13501-1 : 2007 and can be regarded as a 'non-combustible material'. The renders have also been tested and classified in accordance with EN 13501-1 : 2007 (see section 6).

Weathertightness — the system resists the passage of moisture from the ground and from weather (see section 8).

Durability — the system will have a service life in excess of 30 years (see section 10).

The BBA has awarded this Agrément Certificate to the company named above for the system described herein. The system has been assessed by the BBA as being fit for its intended use provided it is installed, used and maintained as set out in this Certificate

On behalf of the British Board of Agrément

Date of First issue: 28 April 2009

Simon Wroe
Head of Approvals — Materials

Greg Cooper
Chief Executive

The BBA is a UKAS accredited certification body — Number 113. The schedule of the current scope of accreditation for product certification is available in pdf format via the UKAS link on the BBA website at www.bbacerts.co.uk

Readers are advised to check the validity and latest issue number of this Agrément Certificate by either referring to the BBA website or contacting the BBA direct.

Regulations

In the opinion of the BBA, the Knauf Aquapanel Exterior System if used in accordance with the provisions of this Certificate, will meet or contribute to meeting the relevant requirements of the following Building Regulations:



The Building Regulations 2000 (as amended) (England and Wales)

Requirement:	A1	Loading
Comment:		The system is acceptable for use as set out in sections 5.1 to 5.11 of this Certificate.
Requirement:	B4(1)	External fire spread
Comment:		The system is unrestricted under this Requirement. See sections 6.1 to 6.10 of this Certificate.
Requirement:	C2(b)(c)	Resistance to moisture
Comment:		The system will meet this Requirement. See section 8 of this Certificate.
Requirement:	Regulation 7	Materials and workmanship
Comment:		The system is acceptable. See sections 10.1 and 10.2 and the *Installation* part of this Certificate.



The Building (Scotland) Regulations 2004 (as amended)

Regulation:	8(1)(2)	Fitness and durability of materials and workmanship
Comment:		The system can contribute to a construction satisfying this Regulation. See sections 9, 10.1, 10.2 and *Installation* part of this Certificate.
Regulation:	9	Building standards — construction
Standard:	1.1(a)(b)	Structure
Comment:		The system is acceptable, with reference to clause 1.1.1[(1)(2)]. See sections 5.1 to 5.11 of this Certificate.
Standard:	2.6	Spread to neighbouring buildings
Comment:		The system can contribute to satisfying this Standard, with reference to clause 2.6.4[(1)(2)]. See sections 6.1 to 6.10 of this Certificate.
Standard:	2.7	Spread on external walls
Comment:		The system can contribute to satisfying this Standard, with reference to clause 2.7.1[(1)(2)]. See sections 6.1 to 6.10 of this Certificate.
Standard:	3.10	Precipitation
Comment:		The system will contribute to meeting this Standard, with reference to clauses 3.10.1[(1)(2)] to 3.10.3[(1)(2)]. See section 8 of this Certificate.
Regulation:	12	Building standards — conversions
Comment:		All comments given for this system under Regulation 9, also apply to this Regulation, with reference to clause 0.12.1[(1)(2)] and Schedule 6[(1)(2)].

(1) Technical Handbook (Domestic)
(2) Technical Handbook (Non-Domestic)



The Building Regulations (Northern Ireland) 2000 (as amended)

Regulation:	B2	Fitness of materials and workmanship
Comment:		The system is acceptable. See sections 10.1 and 10.2 and the *Installation* part of this Certificate.
Regulation:	B3(2)	Suitability of certain materials
Comment:		The system is acceptable. See section 9 of this Certificate.
Regulation:	C4(b)	Resistance to ground moisture and weather
Comment:		The system will contribute to meeting this Regulation. See section 8 of this Certificate.
Regulation:	D1	Stability
Comment:		The system is acceptable as set out in sections 5.1 to 5.11 of this Certificate.
Regulation:	E5(a)	External fire spread
Comment:		The system is unrestricted under this Regulation. See sections 6.1 to 6.10 of this Certificate.

Construction (Design and Management) Regulations 2007

Construction (Design and Management) Regulations (Northern Ireland) 2007

In the opinion of the BBA, there is no information in this Certificate which relates to the obligations of the client, CDM co-ordinator, designer and contractors under these Regulations.

See section: 2 *Delivery and site handling* (2.1 and 2.2).

NHBC Standards 2008

NHBC accepts the use of the Knauf Aquapanel Exterior System, when installed and used in accordance with this Certificate, in relation to *NHBC Standards*, Part 6 *Superstructure (excluding roofs)*, Chapters 6.2 *External timber framed walls* and 6.10 *Light steel framed walls and floors*.

In the opinion of the BBA, the Knauf Aquapanel Exterior System, when installed and used in accordance with this Certificate, satisfies the requirements of the *Zurich Building Guarantee Technical Manual*, Section 4 *Superstructure*, Sub-section *Walls — cladding*.

Technical Specification

1 Description

1.1 The Knauf Aquapanel Exterior System consists of Aquapanel Exterior Cement Board, comprising Portland cement and an aggregate core reinforced with a polymer-coated glassfibre mesh in the back and front surfaces, finished with Aquapanel/Basecoat/Renders. It forms a ventilated system in timber-framed and steel-framed buildings.

1.2 Aquapanel Exterior Cement Board has the characteristics of:

Width (mm)	900[1], 1200[2]
Thickness (mm)	12.5
Approximate mass per unit area (kgm^{-2})	16
Approximate dry density (kgm^{-3})	1150

(1) Available in lengths of 1200, 2000, 2400, 2500 and 2800 mm.

(2) Available in lengths of 900, 2000, 2400, 2500 , 2800 mm and 3000 mm.

1.3 The system comprises the following additional components:

- Aquapanel Exterior Maxi Screws — corrosion-resistant coated screws. SN25 are for use in steel up to 0.7 mm thick with a single layer of board. SN39 are for use in steel up to 0.7 mm thick with a double layer of board, or in timber-frame construction with a single layer of board. SB25 are for use in steel from 0.8 mm thick to 2 mm thick with a single layer of board
- Aquapanel Rustproof Screws — stainless steel screws, SN40 for use in timber for a single layer of boards
- Aquapanel Exterior Joint Filler Grey — a grey, cement-bound filler for application within gaps in board and for bonding tape or reinforcing tape to board
- Aquapanel Exterior Tape (50 m by 100 mm) — glassfibre, alkali-resistant tape for reinforcing exterior joints by embedding in the Aquapanel Exterior Joint Filler Grey. For use with rendered and alternative finishes
- Aquapanel Exterior Reinforcing Tape (50 m by 330 mm) — glassfibre, alkali-resistant tape for reinforcing exterior joints by embedding in the Aquapanel Exterior Joint Filler Grey. For use when the basecoat is left unfinished or painted only
- Aquapanel Exterior Basecoat — a polymer-modified Portland cement material, available as white or grey
- Aquapanel Exterior Reinforcing Mesh (50 m by 1 m) — glassfibre, alkali-resistant reinforcing mesh for embedding with a basecoat
- Aquapanel Exterior Primer — a water-based emulsion for priming the basecoat prior to application of Aquapanel Exterior Mineral Render
- Aquapanel Exterior Mineral Finish — a coloured mineral finishing plaster in powder form, to be mixed with water, to produce a range of textured finishes
- Aquapanel Exterior Silicone Synthetic Resin Render — a ready-to-use coloured render to produce a range of textured finishes
- Aquapanel Exterior Dispersion Render — a ready-to-use coloured render, to produce a range of textured finishes.

1.4 Quality control is carried out on raw materials and on the finished products. Quality control checks on the finished boards include:

- dimensions
- density
- flexural strength
- compressive strength.

2 Delivery and site handling

2.1 Aquapanel Exterior Cement Boards are shrink-wrapped with polythene and palletised, 25 to 50 sheets per pallet. They should be stored inside (where possible) and stacked on a level base.

2.2 All component packs of the system carry the manufacturer's name and instructions for storage and installation. Details of packaging and weights of other components of the system are given in Table 1.

Table 1 Packaging and weights

Component	Quantity	Weight (kg)	Packaging
Aquapanel Exterior Cement Board[1]	25 or 50	approx 16	per pallet
Aquapanel Exterior Maxi Screws (SN25)[2]	1000	–	box
Aquapanel Exterior Maxi Screws (SN39)[2]	500	–	box
Aquapanel Exterior Maxi Screws (SB25)[2]	250	–	box
Aquapanel Rustproof Screws (SN40)[2]	250	–	box
Aquapanel Exterior Joint Filler Grey	1	10/20	bags
Aquapanel Exterior Tape	1	–	rolls
Aquapanel Exterior Reinforcing Tape	1	–	rolls
Aquapanel Exterior Basecoat	1	25	bags
Aquapanel Exterior Reinforcing Mesh	1	–	rolls
Aquapanel Exterior Primer	1	15	pails
Aquapanel Mineral Finish	1	30	bags
Aquapanel Exterior Silicone Synthetic Resin Render	1	25	pails
Aquapanel Exterior Dispersion Render	1	25	pails

(1) See section 1.2.

(2) Supplied in a pack.

Assessment and Technical Investigations

The following is a summary of the assessment and technical investigations carried out on the Knauf Aquapanel Exterior System.

Design Considerations

3 General

3.1 The Knauf Aquapanel Exterior System is satisfactory for use as part of a ventilated exterior wall panel system on timber-frame and steel-frame buildings.

3.2 The design should include:

- a ventilated and drained cavity to ensure that the timber-frame structure is protected from moisture from wind-driven rain in the event of unexpected failure of the cladding envelope, and the inclusion of insect guards to all ventilation openings
- effective detailing around window openings to ensure that wind-driven rain is excluded from the hidden members in the surround and from the cavity
- an effective vapour control layer on the inside, to ensure the frame structure is protected.

3.3 The system should to be kept above damp-proof course level and a minimum of 150 mm above ground level.

4 Practicability of installation

The system is designed to be installed by cladding contractors.

5 Strength and stability



5.1 Aquapanel Exterior Cement Boards have adequate strength and can be incorporated in an external cladding system suitably designed to resist wind loads normally experienced in the UK.

5.2 A suitably qualified chartered engineer must check the design and installation of the cladding.

5.3 The sub-frame and the support rails should be designed to limit mid-span deflections to L/200, and cantilever deflections to L/150. Board mid-span deflections should be limited to L/500.

5.4 The supporting wall must be able to take the full wind loading as well as any racking loads. No contribution from the cladding system may be assumed in this regard.

5.5 Wind loads should be calculated in accordance with BS EN 1991-1-4 : 2005 or BS 6399-2 : 1997. The higher-pressure coefficients applicable to corners of buildings should be used.

5.6 The maximum allowable pull-out value of the fixing to be used for securing the board to the sub-frame should be determined by tests using a minimum safety factor of 3.0 on the characteristic failure load.

5.7 The maximum allowable pull-through values (kN) for the stainless steel screws/Maxi screws[1] are:

Centre	0.42
Edge (25 mm min)	0.19
Corner (25 mm min)	0.14

(1) For fasteners other than those specified in section 1.3, the Certificate holder's advice must be sought.

5.8 For design purposes, the board may be assumed to have the following mechanical properties:

Allowable flexural stress	2.4 Nmm^{-2}
Flexural modulus	4000 Nmm^{-2}

5.9 The board when incorporated in a cladding system comprising; support members (eg timber battens, see *Installation* section Figure 1) at 400 mm centres, specfied screws at maximum 250 mm centres with a minimum embedment of 25 mm in structural grade timber and a minimum of 10 mm tread through the back of steel flange, should adequately resist all wind pressures likely to be experienced in the UK. For other member-spacing, fixing arrangements, and design wind pressures, the structural adequacy of the board should be checked by a suitable qualified engineer.

5.10 A sample of the board, fixed on support members (eg timber battens, see *Installation* section Figure 1) at 625 mm centres, when subjected to soft and hard body impacts in accordance with BS 8200 : 1985, was found to suffer damage. Therefore, at this support spacing, the board may be considered to be suitable for use in areas defined under categories C to F in Table 2 of the Standard (reproduced in part in Table 2).

5.11 In general, the impact resistance of the board will be a function of the sub-framing. The product may be used in category B locations providing, the maximum support members (eg timber battens, see *Installation* section Figure 1) spacing is limited to 300 mm. For impact performance at other support spacings, the Certificate holder should be consulted.

Table 2 Location categories

Category	Description	Examples	
B	Readily accessible to public and others with little incentive to exercise care. Chances of accidents occurring and of misuse	Walls adjacent to pedestrian thoroughfares or playing fields when not in category A	Zone of wall up to 1.5 m above pedestrian or floor level
C	Accessible mainly to those with some incentive to exercise care. Some chance of accident occurring and of misuse	Walls adjacent to private open gardens. Back walls of balconies	
D	Only accessible, but not near a common route, to those with high incentive to exercise care. Small chance of accident occurring or of misuse	Walls adjacent to small fenced decorative gardens with no through paths	
E	Above zone of normal impacts from people but liable to impacts from thrown or kicked objects	1.5 m to 6 m above pedestrian or floor level in public areas	
F	Above zone of normal impacts from people but not liable to impacts from thrown or kicked objects	Wall surfaces of high positions other than those defined in E above	

6 Behaviour in relation to fire



6.1 The Aquapanel Exterior Cement Board has an A1 rating when classified in accordance with EN 13501-1 : 2007 and can be regarded as a 'non-combustible' material as defined in the various national Building Regulations.

6.2 The Aquapanel Exterior Basecoat (white) has an A1 classification in accordance with EN 13501-1 : 2007.

6.3 The Aquapanel Mineral Finish (white) has an A1 classification in accordance with EN 13501-1 : 2007.

6.4 The Aquapanel Exterior Joint Filler (grey) has an A2 classification in accordance with EN 13501-1 : 2007.

6.5 The Aquapanel Exterior Basecoat (grey) has an A2 classification in accordance with EN 13501-1 : 2007.

6.6 The Aquapanel Exterior Silicone Synthetic Resin Render has an E classification in accordance with EN 13501-1 : 2007.

6.7 The Aquapanel Exterior Dispersion Render has an E classification in accordance with EN 13501-1 : 2007.

6.8 For resistance to fire, the performance of a wall incorporating the system can only be determined by tests from a suitably accredited laboratory, and is not covered by this Certificate.

6.9 Cavity barriers should be incorporated behind the cladding as required under the national Building Regulations, but should not block essential ventilation pathways. Guidance on fire barriers can be found in BRE 135 : 2003 *Fire Performance of External Insulation For Walls of Multi-Storey Buildings*.

6.10 When installed onto a timber-frame or steel-frame building the requirements of the relevant regulations should be followed:

England and Wales — Approved Document B

Scotland — Regulation 9, clauses 2.6.4 and 2.7.1

Northern Ireland — Technical Booklet E.

7 Proximity of flues

When installing the system in close proximity to certain flue pipes, the following provisions of the national Building Regulations should be met:

England and Wales — Approved Document J

Scotland — Mandatory Standard 3.19, clauses 3.19.1[1][2] to 3.19.4[1][2] and 3.19.8[1][2]

(1) Technical Handbook (Domestic).

(2) Technical Handbook (Non-Domestic).

Northern Ireland — Technical Booklet L.

8 Weathertightness



The Knauf Aquapanel Exterior System resists the passage of moisture from the ground and from weather. Guidance on recommended cavity widths is given in *NHBC Standards* 2008, Chapters 6.2 *External timber framed walls* and 6.10 *Light steel framed walls and floors*.

9 Maintenance



Periodic inspections should be carried out to assess the need for cleaning, maintenance painting, localised repairs and element replacements, such as joint seals and fixings. Advice regarding re-coating and maintenance procedures should be sought from the Certificate holder.

10 Durability



10.1 The durability and service life of the Knauf Aquapanel Exterior System will depend upon the building location, immediate environment and intended use of the building.

10.2 Provided regular maintenance is carried out, as described in section 9 and in accordance with the Certificate holder's instructions, the Knauf Aquapanel Exterior System can be expected to have a service life in excess of 30 years when used in normal UK climatic conditions. However, durability may be extended by periodic re-coating of the finish.

10.3 Any colour change will be slight and uniform on any one elevation, and the system should have a decorative life of approximately 20 years.

Installation

11 Site survey and preliminary work

11.1 A pre-installation survey must be carried out by the Installer to determine the suitability of the building for installation and any repairs that will be necessary prior to installation of the system. A specification is prepared for each elevation of the building including:

- detailing around windows, doors and at eaves
- any alterations to external plumbing
- areas where flexible sealants will be required
- the positions of fire barriers (where required)
- pull-out strength of the fixings used to secure the members to the structure (where considered necessary by the supervising engineer).

11.2 The design of each installation must be checked by a suitably qualified engineer (or similarly competent person) and take into account the nature and quality of the substrate, location, supporting structure and fixings. In the absence of a formal requirement a safety factor of 3 is used.

11.3 It is recommended that external plumbing is removed, and where appropriate on existing buildings alterations are made to underground drainage to accommodate the repositioning on the finished face.

12 General

12.1 Installation of the Knauf Aquapanel Exterior System should be carried out strictly in accordance with the provisions of this Certificate and the Certificate holder's instructions (see Figure 1 for typical installation detailing).

12.2 The level of supervision during installation of the Knauf Aquapanel Exterior System and the associated structure, must be sufficient to ensure the quality of workmanship described in BS 8200 : 1985.

12.3 The sub-frame to which the cladding is fixed must be structurally sound and constructed in accordance with the requirements of the relevant national Building Regulations and Standards (see sections 12.4 and 12.5).

12.4 Timber stud walls and timber support work must be structurally sound, designed and constructed in accordance with BS 5268-2 : 2002, and preservative treated in accordance with BS 5268-5 : 1989, BS 5589 : 1989 and BS EN 351-1 : 2007.

12.5 Galvanized steel framework must be structurally sound, designed and constructed in accordance with BS 5950-5 : 1998.

12.6 The system is capable of transmitting its self weight and wind load to the structure. The adequacy of fixing of the sub-frame to the structural frame for specific installations is outside the scope of this Certificate and must be verified by a suitably qualified engineer. Particular care is required around window and door openings to ensure that the structure is capable of sustaining the additional weight of the Knauf Aquapanel Exterior System.

12.7 Horizontal movement joints in accordance with EN 13914-1 : 2005 must be provided at every floor to accommodate vertical shrinkage of up to 6 mm in the timber frame and to follow movement joints in the substructure. For steel frame structures, reference to the Structural Engineer's details for detection at floor level and movement joints in the substructure should be made.

12.8 Vertical movement joints in accordance with EN 13914-1 : 2005 should be provided at maximum of 15 m intervals. The actual spacing and position of the joints will be determined by the shape of the area to be rendered and should coincide with movement joints in the structure and allow for the same degree of movement.

12.9 When a breather membrane is required, it must be installed and properly overlapped in accordance with the instructions of the membrane manufacturer and the building designer.

12.10 All window and door openings are sealed strictly in accordance with the Certificate holder's installation instructions to ensure that they are weathertight.

Figure 1 Typical installation details

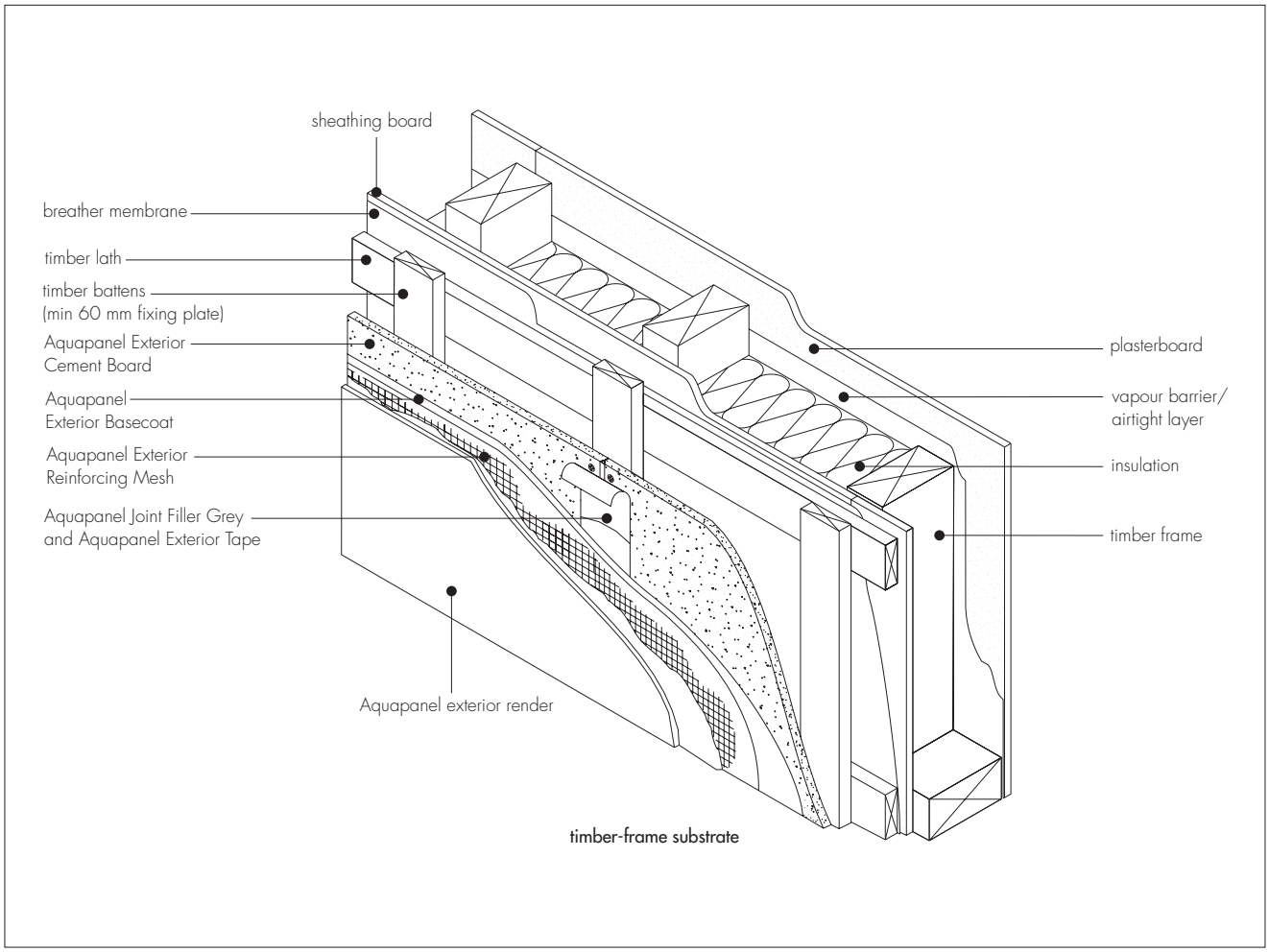

Figure 1 Typical installation details (continued)

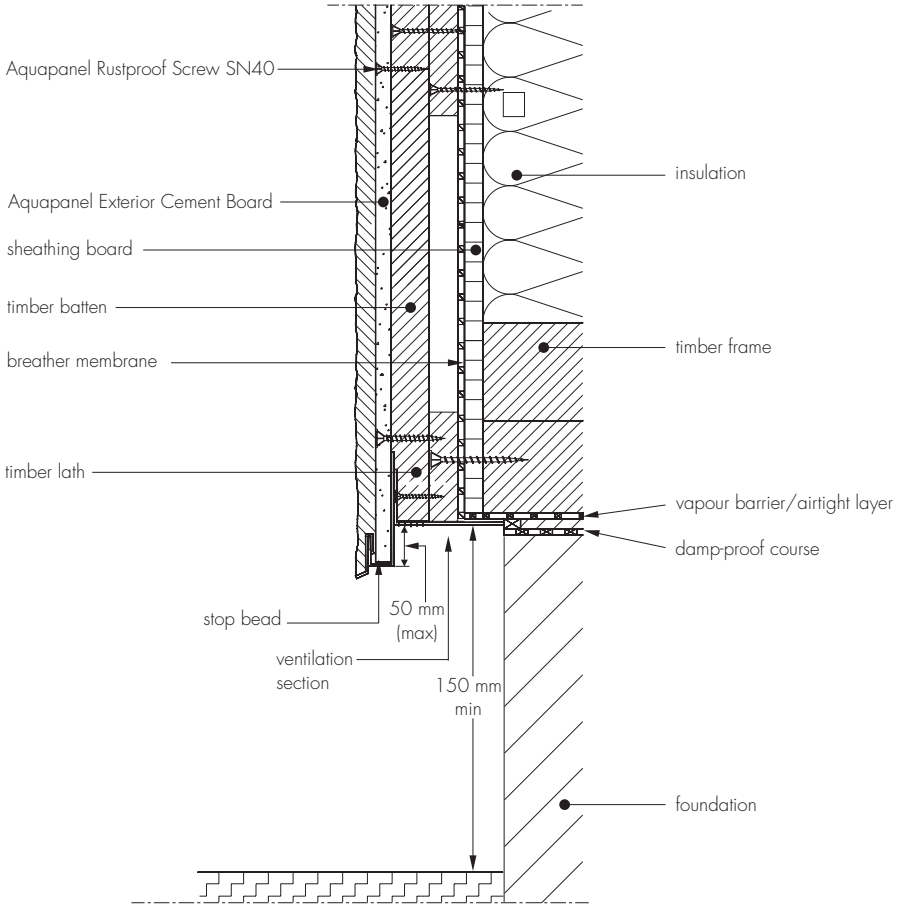

timber-frame floor detail

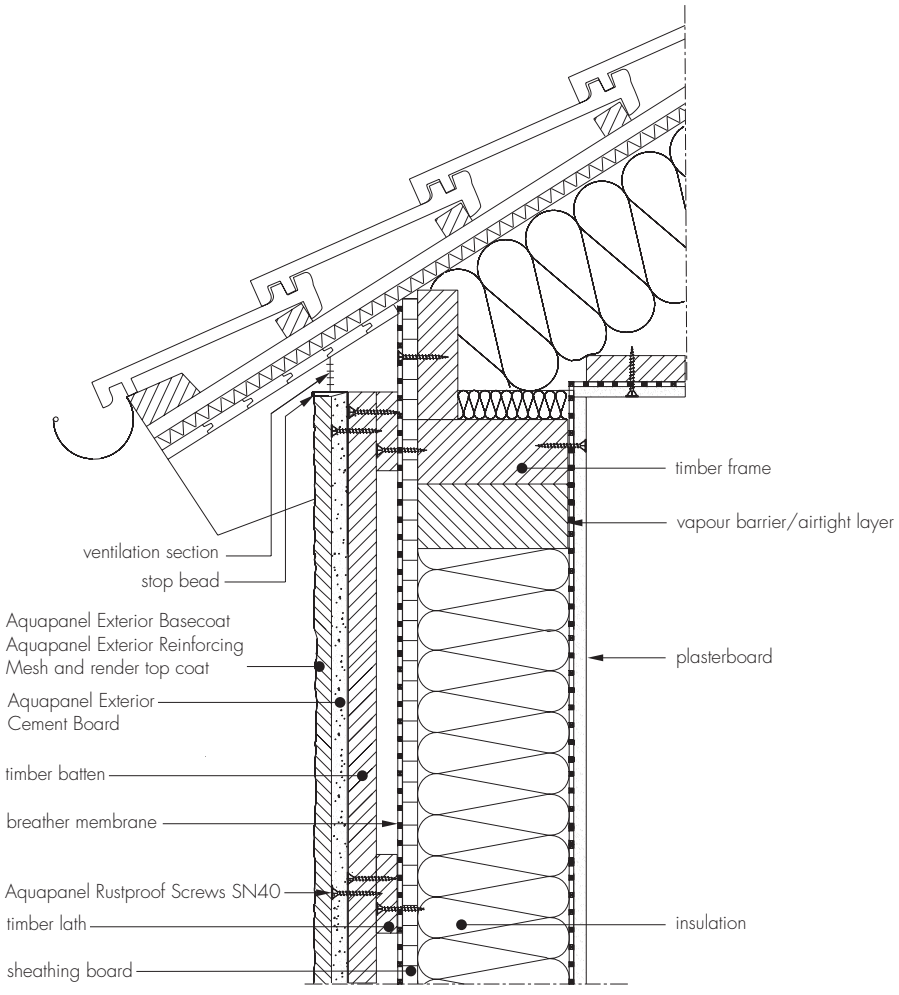

timber-frame roof detail

13 Procedure

Knauf Aquapanel Exterior Cement Boards

13.1 The boards should be protected from moisture and weathering prior to installation. Boards which have become damp must be dried on both sides on a flat surface prior to installation.

13.2 The board is supported on a minimum of three members, the centres of which should be a maximum spacing of 600 mm.

13.3 Screws should be fixed at a minimum of 15 mm from board edges. The spacing for the screws should be no more than 250 mm and they should not be over-tightened.

13.4 If it is necessary to cut boards, they should be scored and snapped with a kraft type knife. Alternatively, a hand-held circular saw with a dust extractor or a pendulum jig saw can be used. The use of a carbide or diamond-tipped saw blade is recommended.

13.5 It is essential that the boards are rested directly on the framework during installation.

13.6 The boards are fixed horizontally over supports with gaps between 3 to 5 mm. Successive rows of boards should be installed with vertical joints offset by a minimum of one stud cavity.

13.7 The boards are cut to fit up to the lintel and down to the sill of windows ensuring that no continuous vertical joint is formed to avoid leakage and cracks (see Figure 2).

Figure 3 Installation of boards around lintel and sills

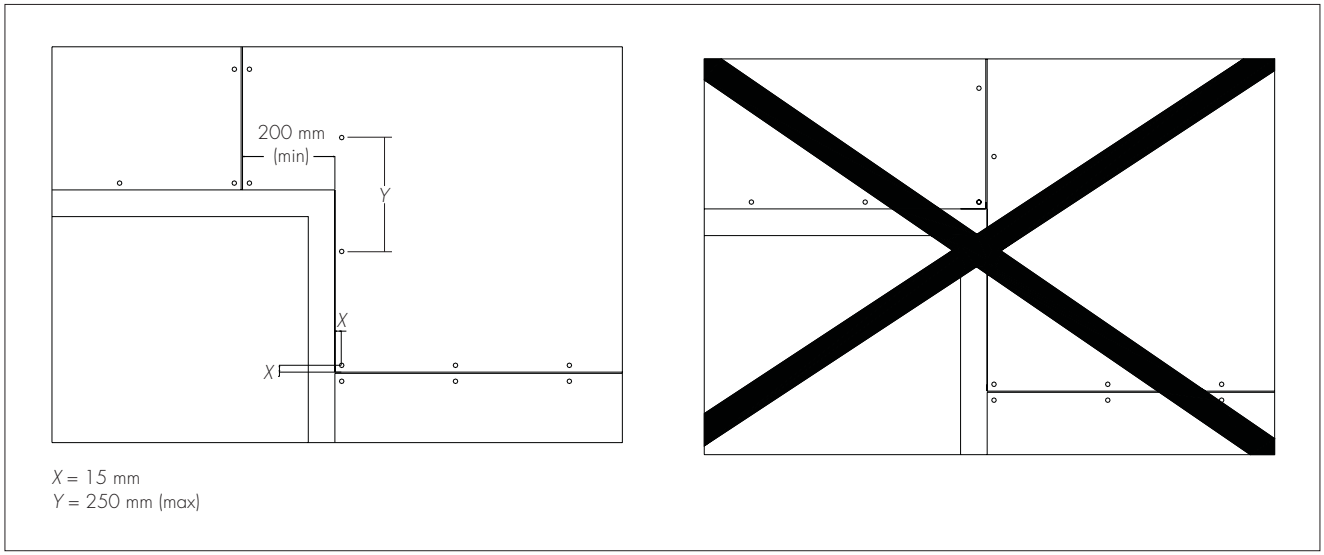

X = 15 mm
Y = 250 mm (max)

13.8 Immediately after assembly, the substructure is protected by filling all joints and screw heads with Aquapanel Exterior Joint Filler Grey. Aquapanel Exterior Tape or Aquapanel Exterior Reinforcing Tape should be immediately embedded centred over all the joints.

13.9 Installation of the Aquapanel Exterior Joint Filler Grey, basecoat and finishing materials should not be carried out at temperatures of +5°C and falling.

13.10 All corners are reinforced by applying a 5 mm to 7 mm thick layer of Aquapanel Exterior Basecoat to the boards, and a corner profile is embedded.

13.11 Windows and other openings should be reinforced at the corners with extra pieces of Aquapanel Exterior Reinforcing Mesh (minimum size 500 mm by 300 mm) embedded into 5 to 7 mm of Aquapanel Exterior Basecoat.

13.12 The entire wall is covered with Aquapanel Exterior Basecoat with a notched trowel with 5 to 7 mm high notches. Aquapanel Exterior Reinforcing Mesh is embedded into the top third of these notches before the application of more Aquapanel Exterior Basecoat to create a smooth finish. (Refer to the Certificate holder's product data sheets for drying times).

13.13 The applicator should ensure that the final surface is smooth before applying the Aquapanel Exterior Primer or one of the render finishes.

13.14 If applying Aquapanel Exterior Mineral Finish, one coat of Aquapanel Exterior Primer should be applied over the entire surface of dried Aquapanel Exterior Basecoat and left to cure. (Refer to Certificate holder's product data sheets for drying times).

Render finishes

13.15 The Certificate holder's advice should be sought regarding the preparation and application of either of the three render finishes. In particular, regard should be taken of the following mixing and application thicknesses:

- Aquapanel Exterior Silicone Synthetic Resin Render is ready mixed and is applied to suit a maximum grain size of 2 mm
- Aquapanel Exterior Dispersion Render is ready mixed and is applied to suit a maximum grain size of 2 mm

- Aquapanel Mineral Finish is a powdered material and should be mixed until smooth and is applied to suit a maximum grain size of 2 mm.

13.16 The finishes must not be applied in wet weather, at temperatures below 5°C and falling, or when frost is expected. Freshly coated work should be protected from rain until fully cured.

13.17 To avoid dry line joints, continuous surfaces should be completed without a break.

13.18 Other finishes, for example, renders, paints, bricks or ceramic coatings can be applied to the Aquapanel Exterior Basecoat layer however these are outside the scope of this Certificate.

Technical Investigations

14 Investigations

14.1 An assessment was made of the data resulting in the issue of European Technical Approval ETA-07/0173 for Aquapanel Cement Board including:

- bending strength
- apparent density
- impact resistance
- pull-through/pull-out strength of fixings
- shear strength
- dimensional stability
- reaction to fire
- hygrothermal cycling.
- tensile strength and elongation
- water vapour permeability
- thermal conductivity

14.2 The product's resistance to wind loading, mechanical resistance and stability was assessed.

14.3 The manufacturing process was examined, including the methods adopted for quality control, and details were obtained of the quality and composition of the materials used.

Bibliography

BS 5589 : 1989 *Code of practice for preservation of timber*

BS 5268-2 : 2002 *Structural use of timber — Code of practice for permissible stress design, materials and workmanship*

BS 5268-5 : 1989 *Structural use of timber — Code of practice for the preservative treatment of structural timber*

BS 5950-5 : 1998 *Structural use of steelwork in building — Code of practice for design of cold formed thin gauge sections*

BS 6399-2 : 1997 *Loading for buildings — Code of practice for wind loads*

BS 8200 : 1985 *Code of practice for design of non-loadbearing external vertical enclosures of buildings*

BS EN 351-1 : 2007 *Durability of wood and wood-based products — Preservative-treated solid wood — Classification of preservative penetration and retention*

BS EN 1991-1-4 : 2005 *Eurocode 1 : Actions on structures — General actions — Wind actions*

BS EN 13914-1 : 2005 *Design, preparation and application of external rendering and internal plastering — External rendering*

EN 13501-1 : 2007 *Fire classification of construction products and building elements. Classification using test data from reaction to fire tests*

15 Conditions

15.1 This Certificate:

- relates only to the product/system that is named and described on the front page
- is granted only to the company, firm or person named on the front page — no other company, firm or person may hold or claim any entitlement to this Certificate
- is valid only within the UK
- has to be read, considered and used as a whole document — it may be misleading and will be incomplete to be selective
- is copyright of the BBA
- is subject to English law.

15.2 Publications and documents referred to in this Certificate are those that the BBA deems to be relevant at the date of issue or re-issue of this Certificate and include any: Act of Parliament; Statutory Instrument; Directive; Regulation; British, European or International Standard; Code of Practice; manufacturers' instructions; or any other publication or document similar or related to the aforementioned.

15.3 This Certificate will remain valid for an unlimited period provided that the product/system and the manufacture and/or fabrication including all related and relevant processes thereof:

- are maintained at or above the levels which have been assessed and found to be satisfactory by the BBA
- continue to be checked as and when deemed appropriate by the BBA under arrangements that it will determine
- are reviewed by the BBA as and when it considers appropriate.

15.4 In granting this Certificate, the BBA is not responsible for:

- the presence or absence of any patent, intellectual property or similar rights subsisting in the product/system or any other product/system
- the right of the Certificate holder to manufacture, supply, install, maintain or market the product/system
- individual installations of the product/system, including the nature, design, methods and workmanship of or related to the installation
- the actual works in which the product/system is installed, used and maintained, including the nature, design, methods and workmanship of such works.

15.5 Any information relating to the manufacture, supply, installation, use and maintenance of this product/system which is contained or referred to in this Certificate is the minimum required to be met when the product/system is manufactured, supplied, installed, used and maintained. It does not purport in any way to restate the requirements of the Health & Safety at Work etc Act 1974, or of any other statutory, common law or other duty which may exist at the date of this Certificate; nor is conformity with such information to be taken as satisfying the requirements of the 1974 Act or of any statutory, common law or other duty of care. In granting this Certificate, the BBA does not accept responsibility to any person or body for any loss or damage, including personal injury, arising as a direct or indirect result of the manufacture, supply, installation, use and maintenance of this product/system.

British Board of Agrément
Bucknalls Lane
Garston, Watford
Herts WD25 9BA

©2009

tel: 01923 665300
fax: 01923 665301
e-mail: mail@bba.star.co.uk
website: www.bbacerts.co.uk