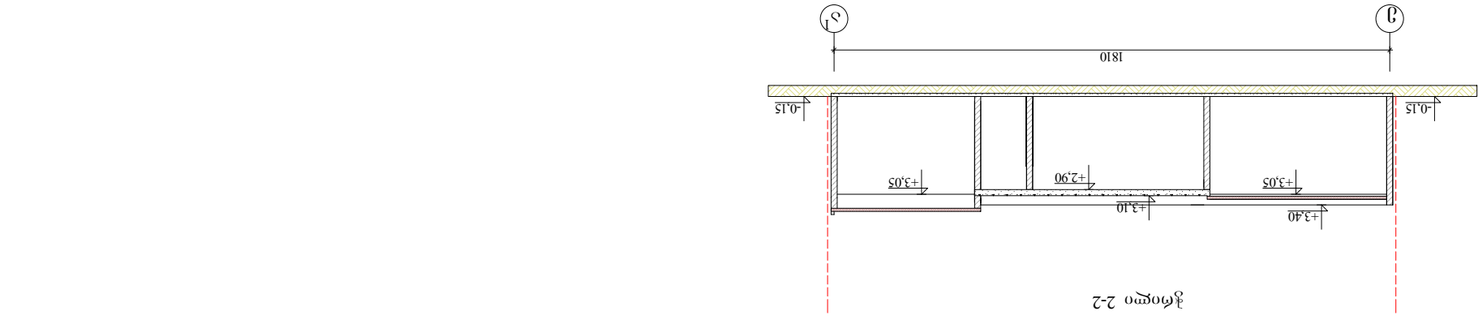
+4.55
+4.70
+3.40
+3.05
+3.10
+3.20
+2.90
+0.60
0.00
-0.15
-0.15
-0.15