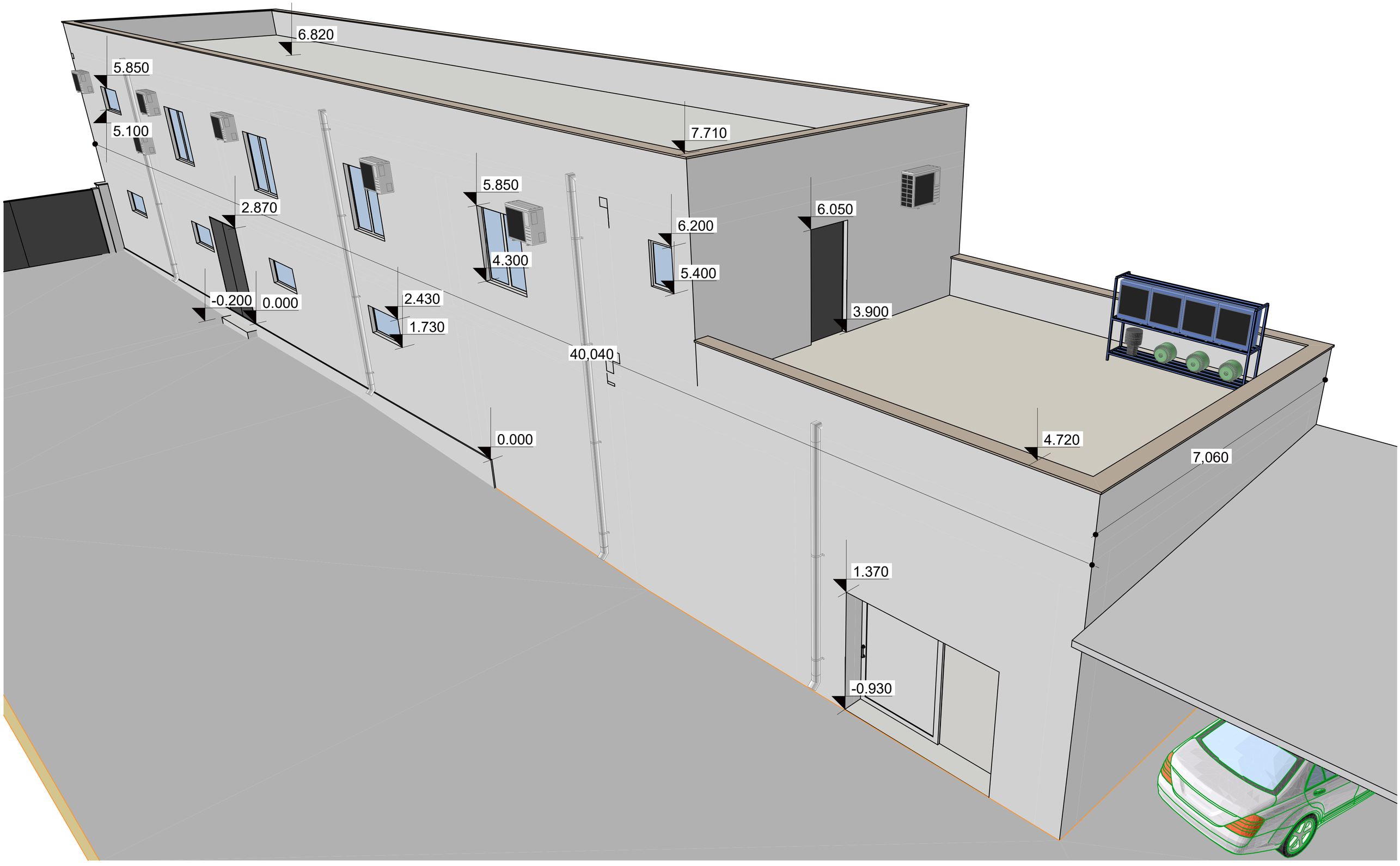
6.820
5.850
5.100
2.870
-0.200
0.000
2.430
1.730
5.850
4.300
7.710
6.200
5.400
6.050
3.900
40,040
0.000
4.720
7,060
1.370
-0.930

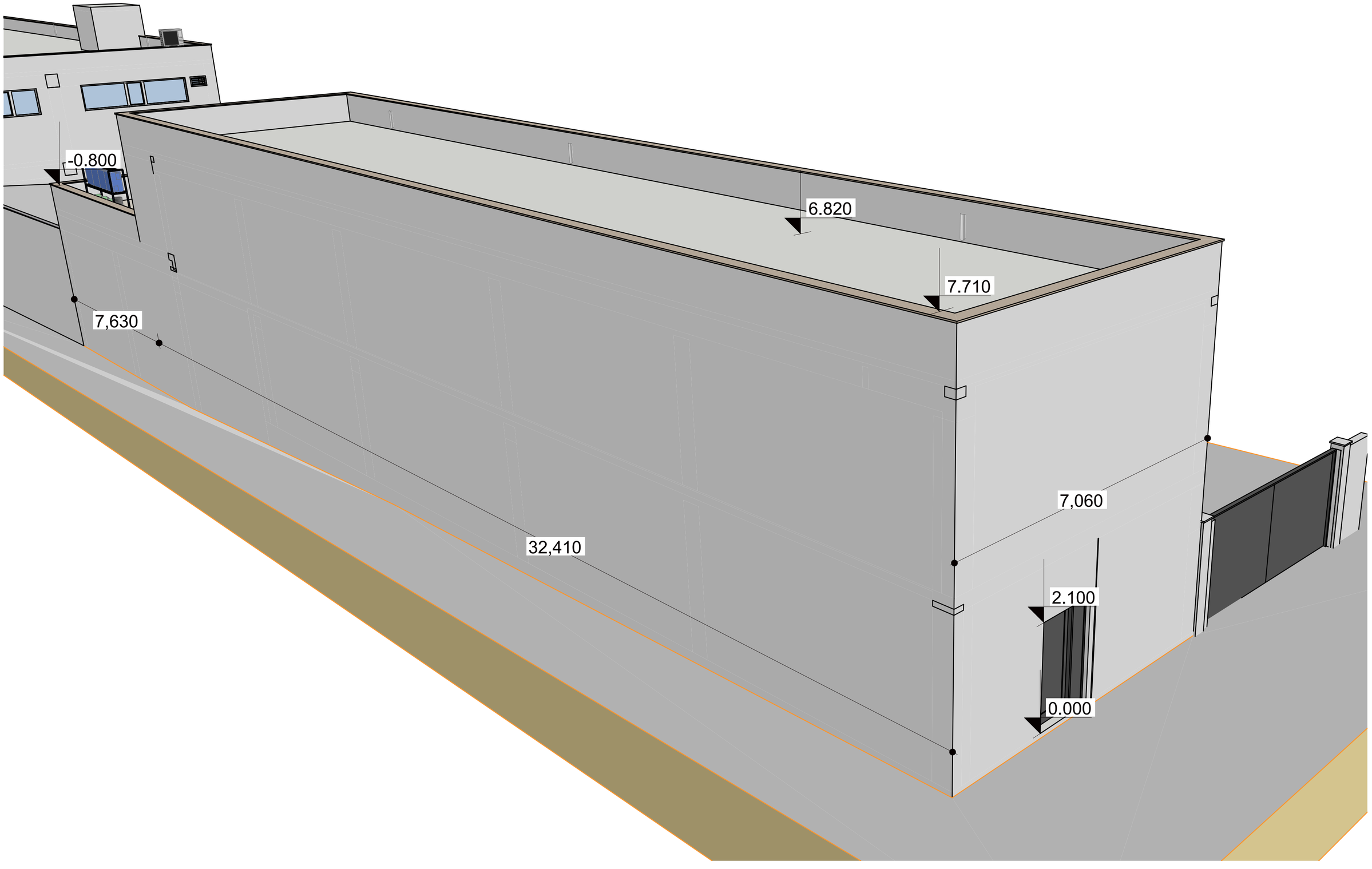
-0.800
6.820
7.710
7,630
32,410
7,060
2.100
0.000

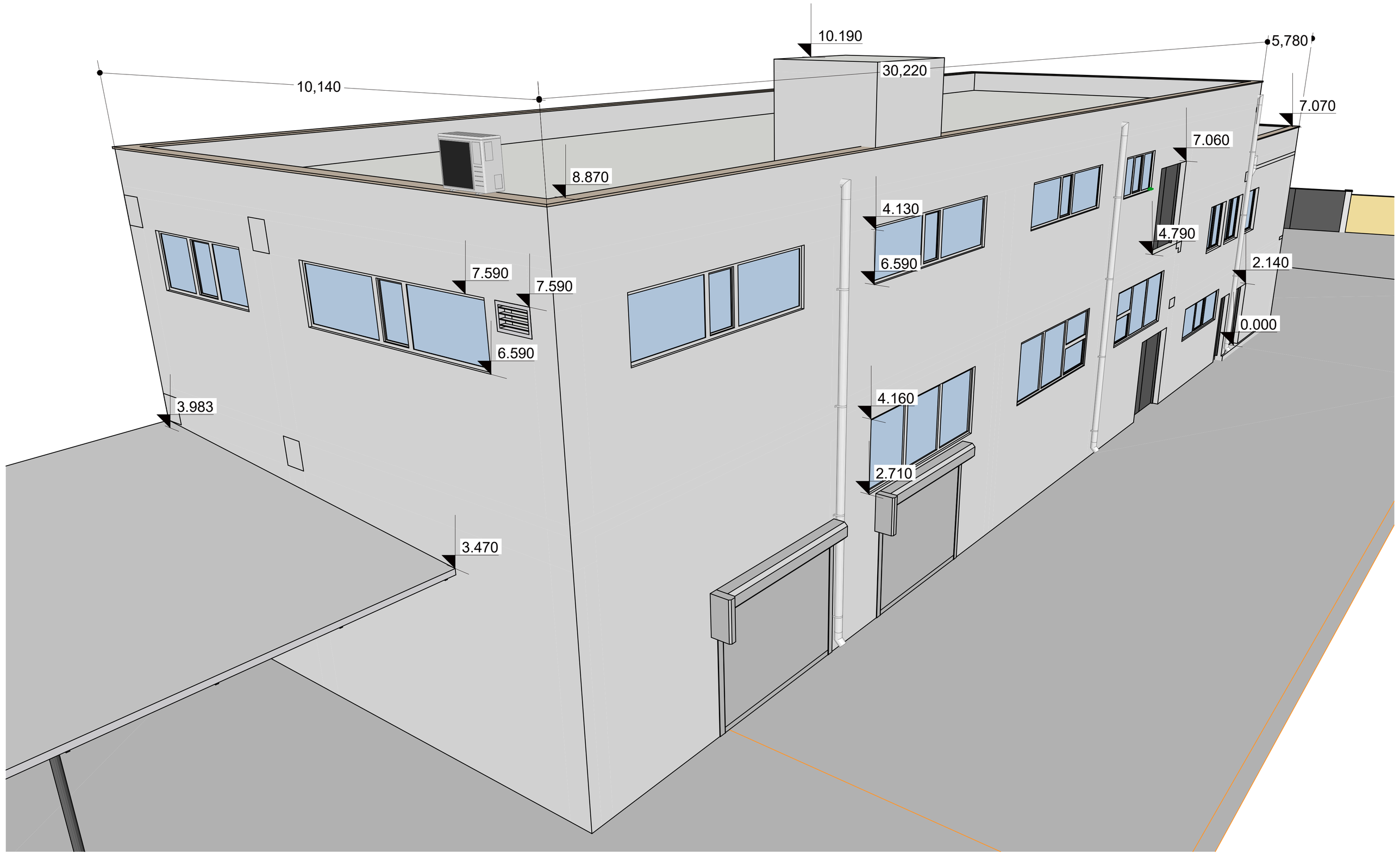
10.190
5,780
10,140
30,220
7.070
7.060
8.870
4.130
4.790
7.590
7.590
6.590
2.140
0.000
6.590
3.983
4.160
2.710
3.470

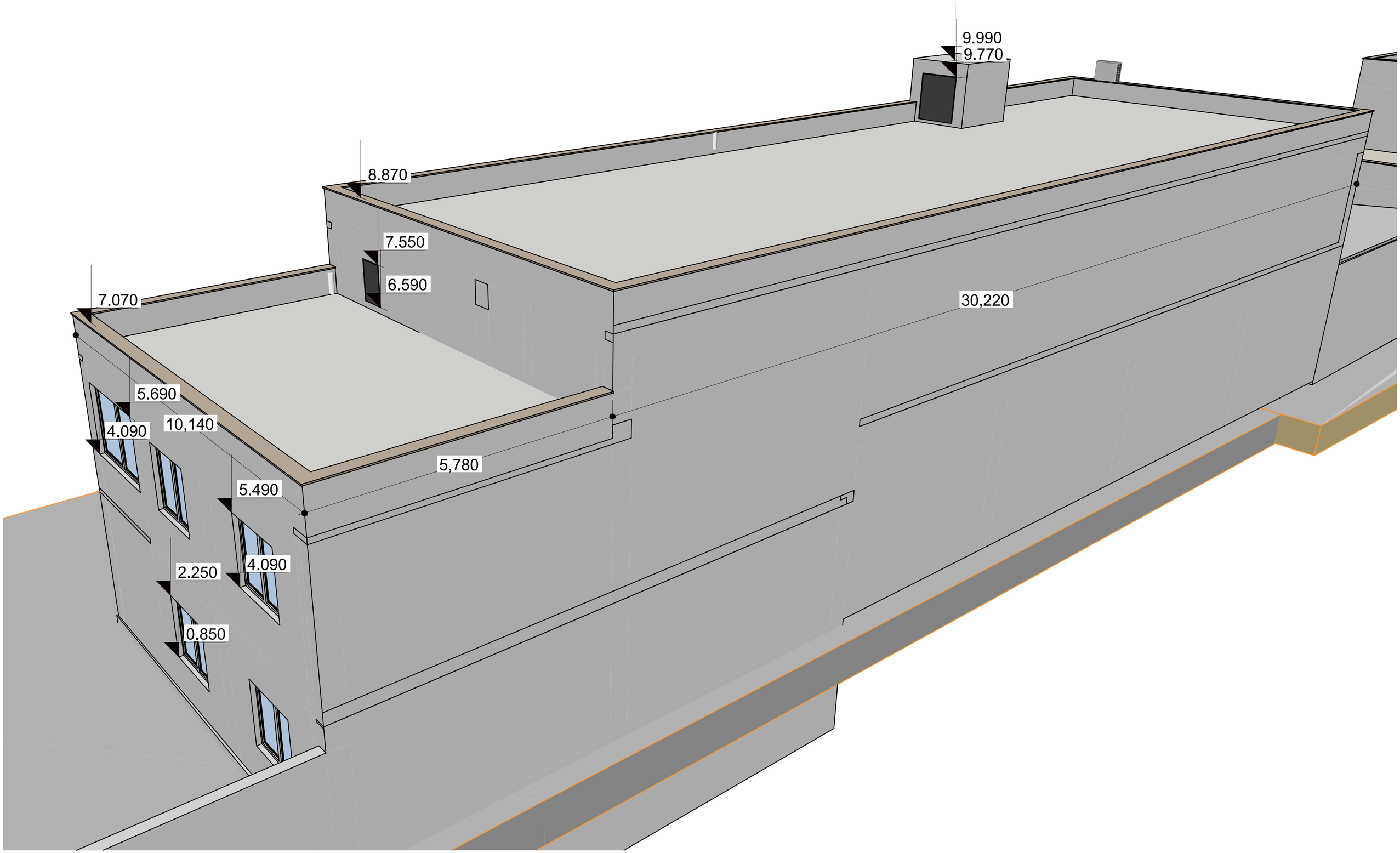
9.990
9.770
8.870
7.550
6.590
7.070
30,220
5.690
10,140
4.090
5,780
5.490
4.090
2.250
0.850

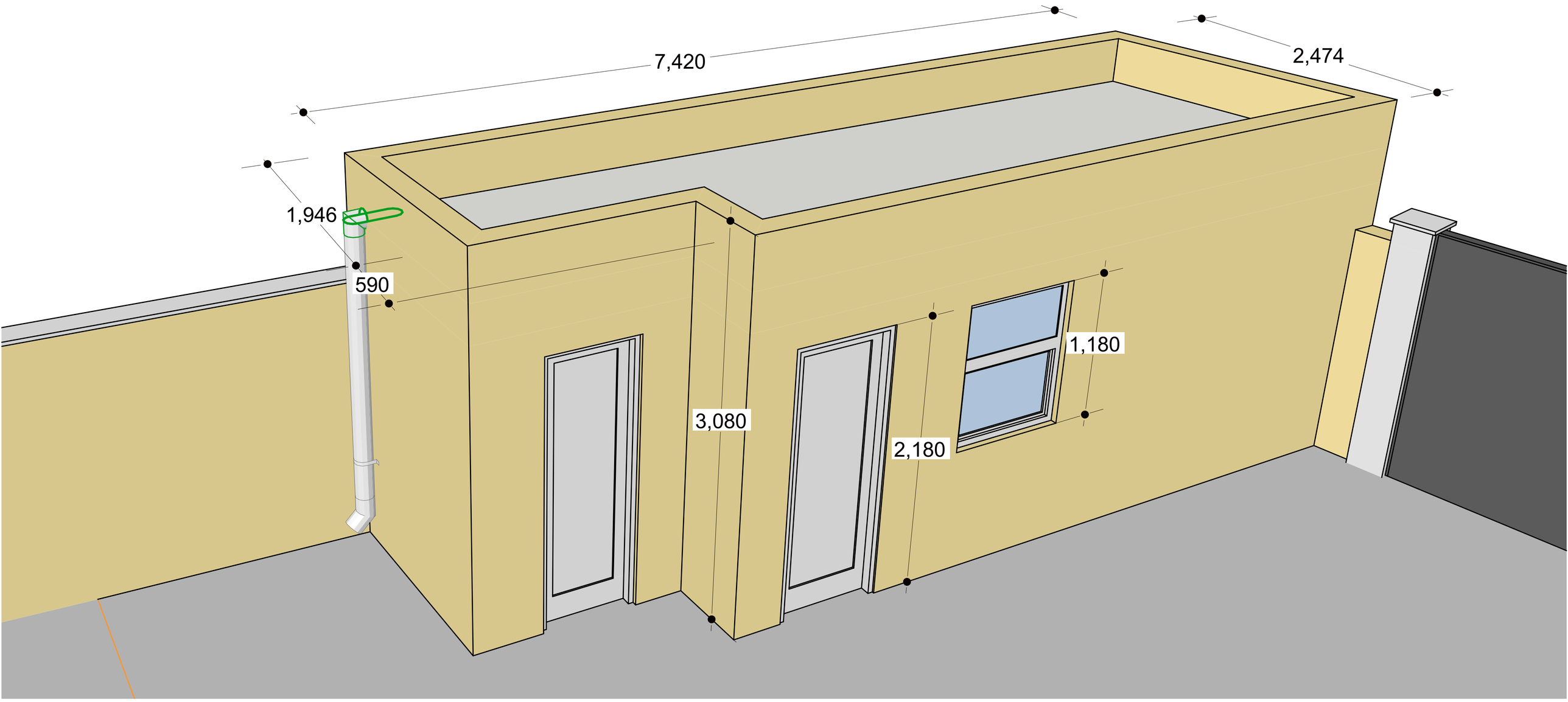
7,420
2,474
1,946
590
1,180
3,080
2,180

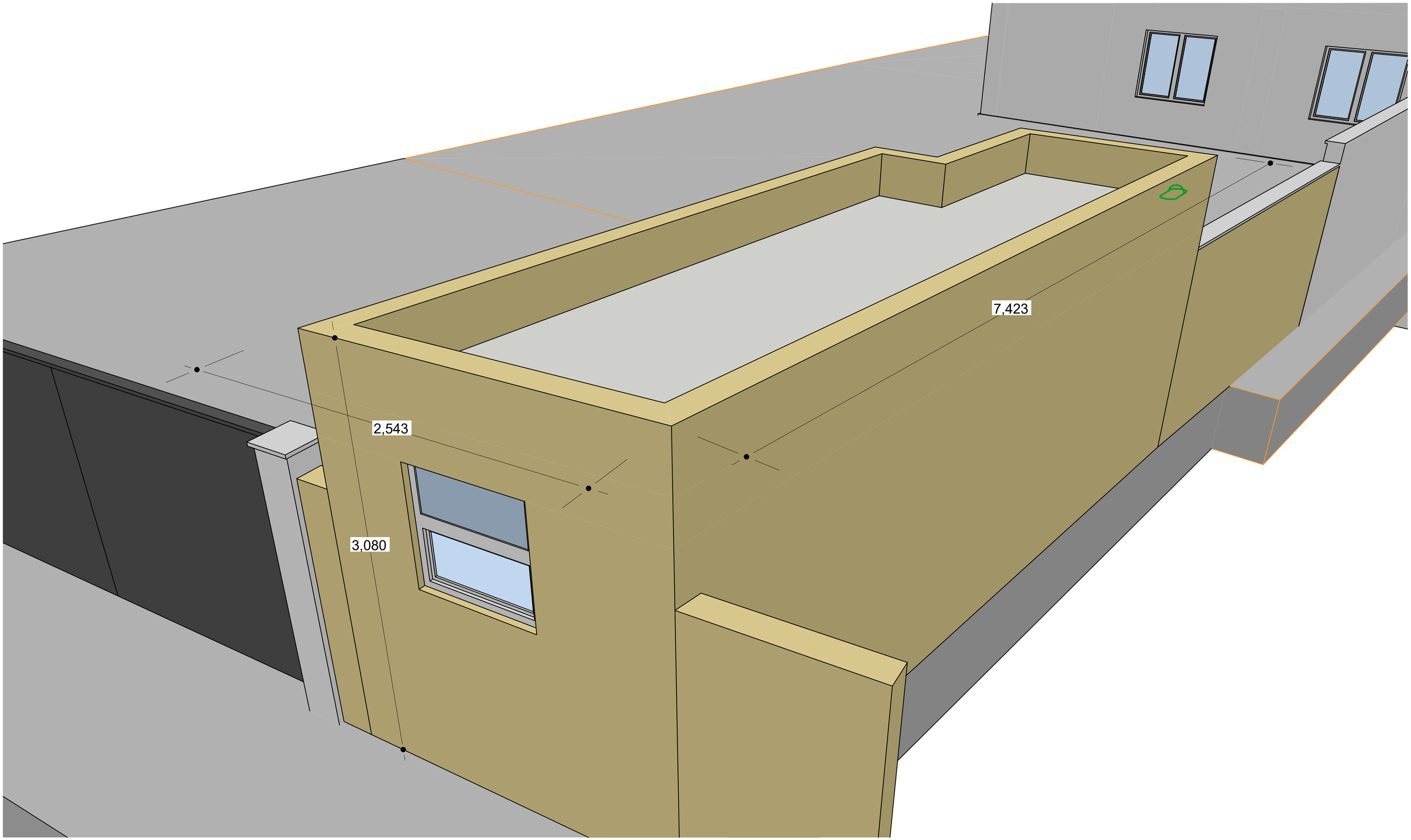
7,423
2,543
3,080

