Wrili 2-2

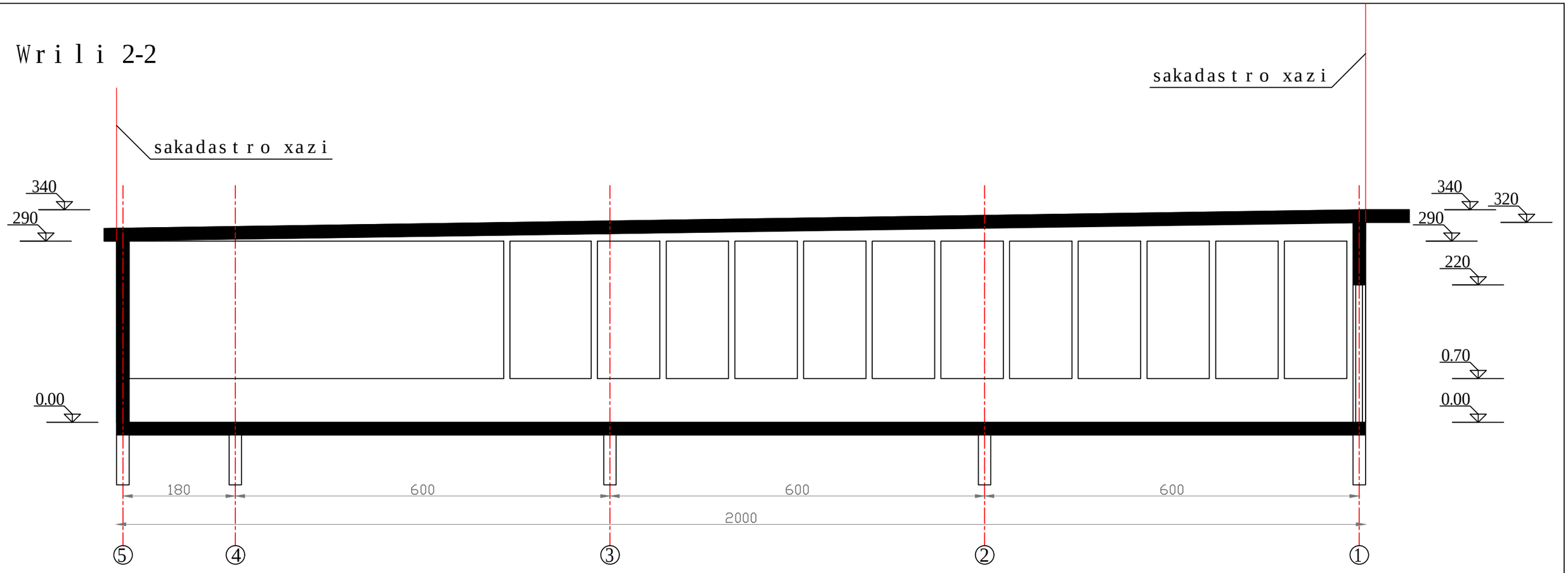
sakadastro xazi
sakadastro xazi
340
290
340
320
290
220
0.70
0.00
0.00
180
600
600
600
2000
5
4
3
2
1

W r i l i 1-1

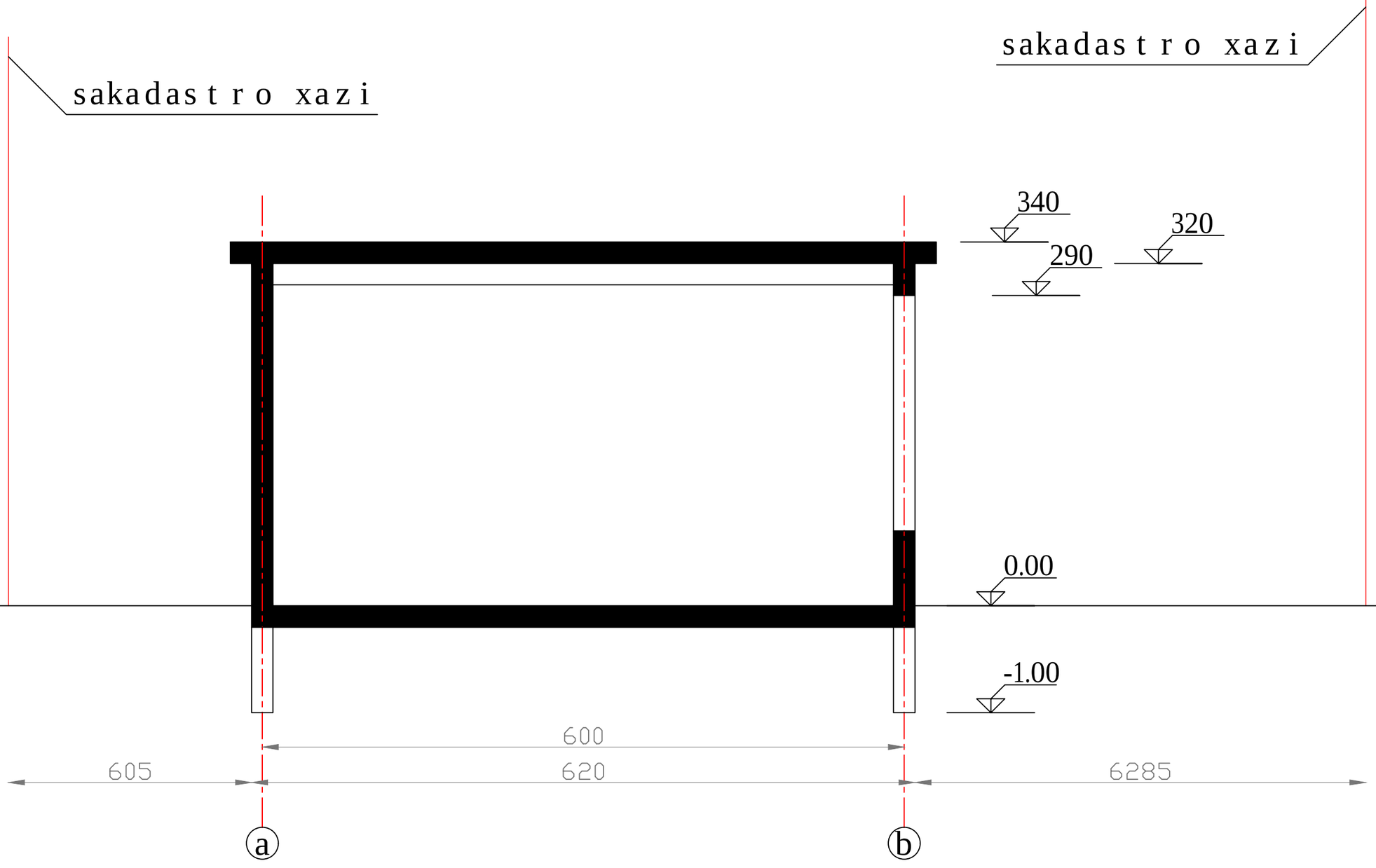
sakadastro xazi
sakadastro xazi
340
320
290
0.00
-1.00
600
605
620
6285
a
b