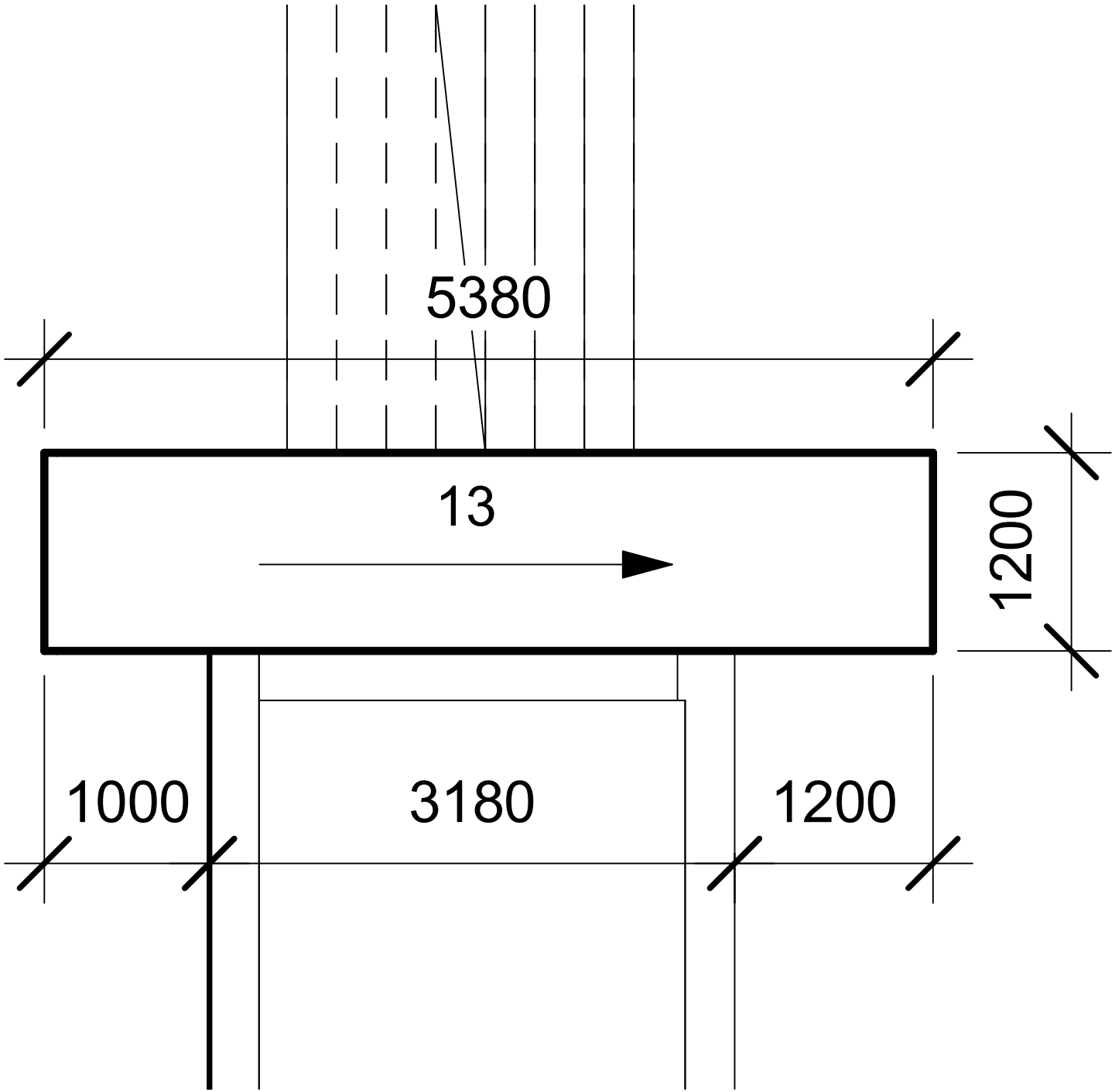
5380
13
1200
1000
3180
1200


ALCORIUM
+1.200
13°
1200
5380
±0.000
1200