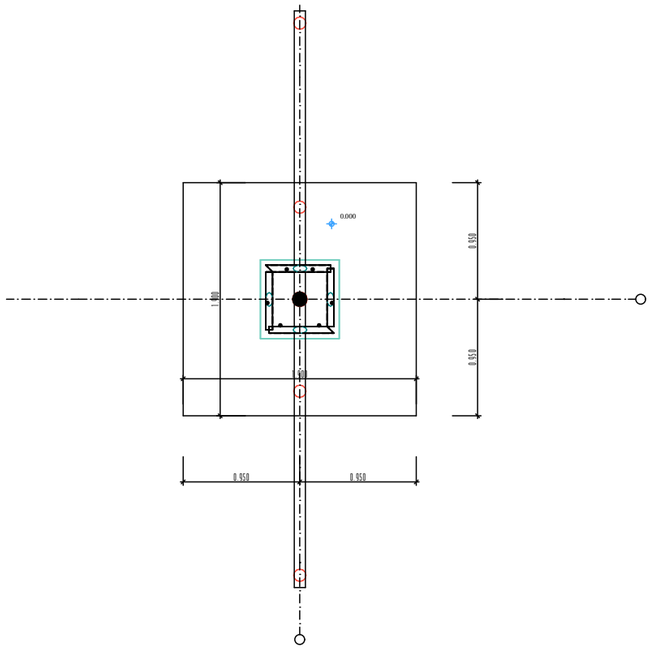

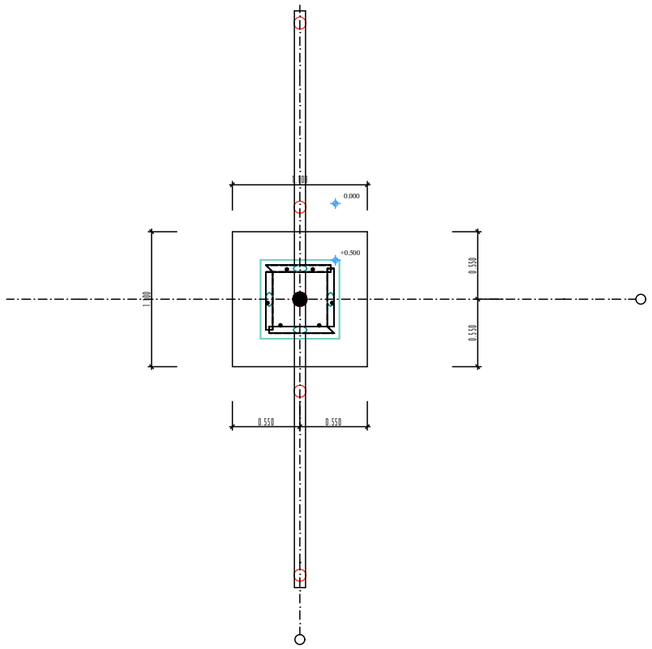

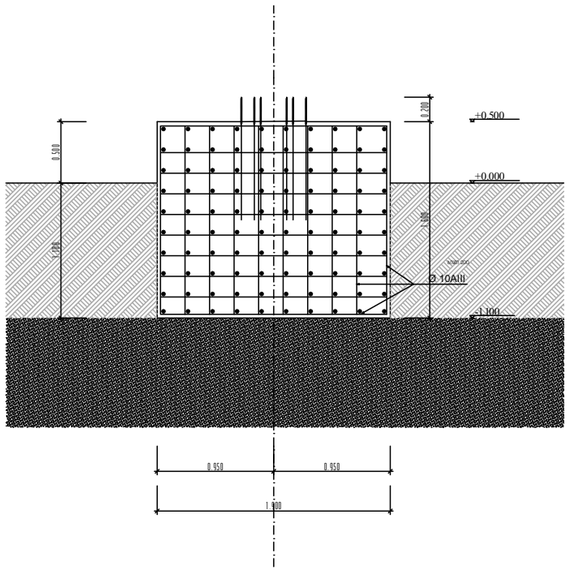

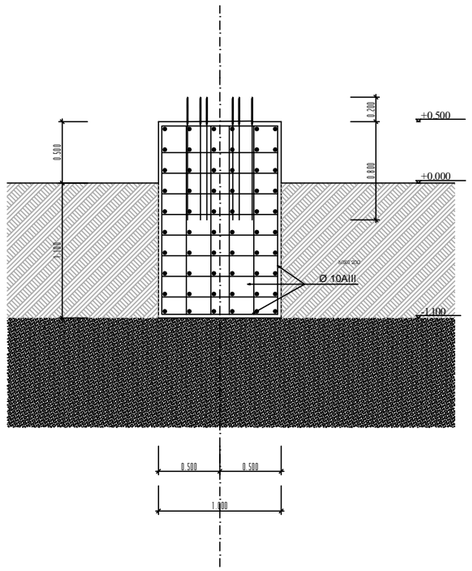

LEGEND:

ᲛᲔᲛᲐᲠ Მ. 1:50

REVISION:

REV.	DATE (dd/mm/yy)	DESCRIPTION OF REVISION	APP
A	01/08/18	FIRST ISSUE	A.T

	NAME	DATE (dd/mm/yyyy)
DESIGNED BY:	M.ISIK	01/08/2018
PREPARED BY:	I.NGUETTE	01/08/2018
CHECKED BY:	A. TERNON	01/08/2018
APPROVED BY:	T.BOUTHINON	01/08/2018

SAKAERONAVIGATSIA LTD

AGL DESIGN SERVICES FOR CAT I APPROACH 13R

CLIENT:

GEORGIAN AIR NAVIGATION

KEY PLAN:

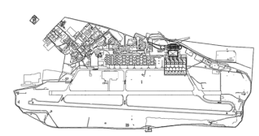

DESIGN CONSULTANT:

ADP INGÉNIERIE

DESIGN STAGE: DETAILED DESIGN

FACILITY:

DISCIPLINE: AIRFIELD LIGHTING

DRAWING TITLE:

LOCATION PLAN

GENERAL LAYOUT

SHEET 1/8

PROJECT NUMBER	SHEET NAME	REV.
18GE040001	DD-A1000-E01-1-10000	A
SCALE (A0) 1/5000		