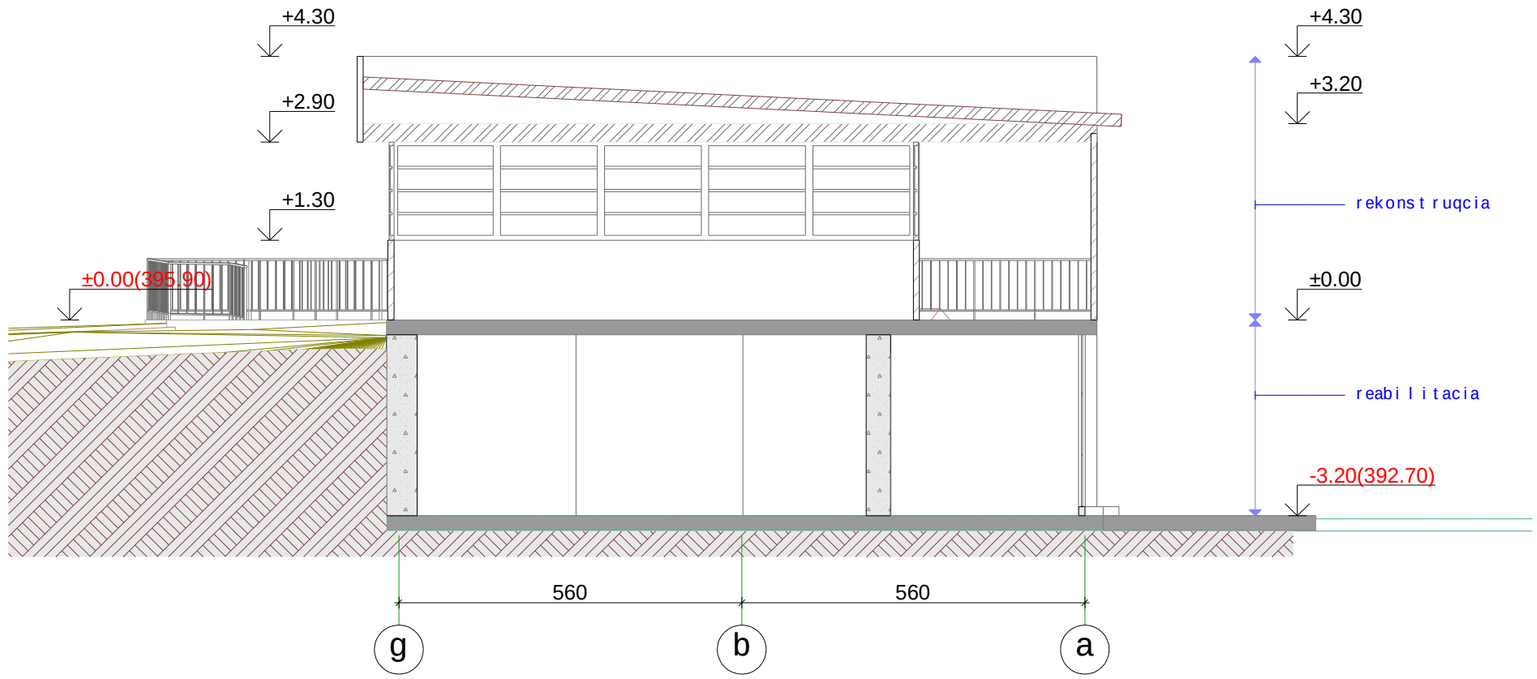

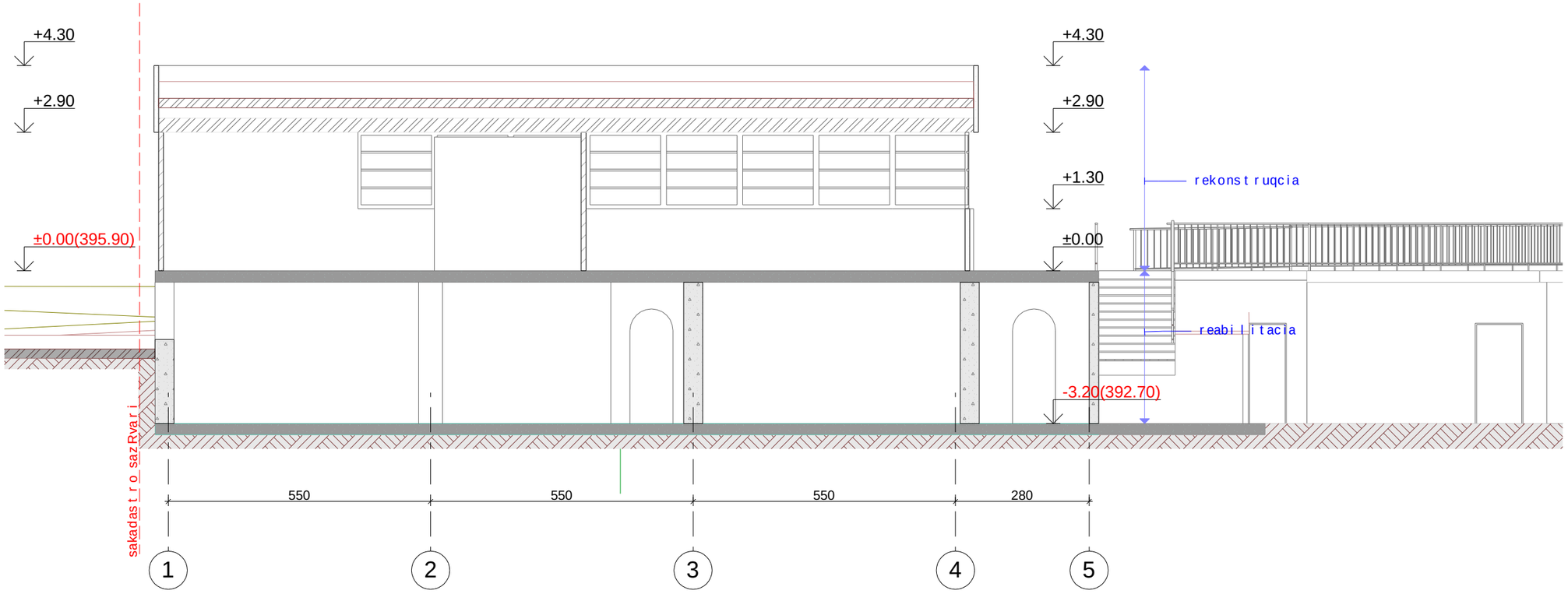

sakadastro sazRvari

sakadastro sazRvari

formati A-3 | Tbilisi 2020 w.

dakavebuli obebi

pirobiTi niSnebi

- sakadastro sazRvari
- TavSeyris jgufi (Tv-2)
- damxmare da sxvadasxva daniSnulebis jgufi (ds)
- samrewvelo jgufi (sm-1)
- gasasvlelamde maqsimaluri savali manZili (g.s.m)
- misawvdomi svla-gezi
- struqturuli anawyobis(kedlis) xanZarmedegobis xarisxi 1 saaTi
- struqturuli anawyobis(kedlis) xanZarmedegobis xarisxi 2 saaTi
- XX.XX iatakis saproeqto niSnuli
- 1 — 1 Wrilis xazi
- X — X RerZis xazi
- saxanZro ganyofilebasTan kavSiris sistema
- sagangebo xmovani gangaSis sakomunikacio sistema
- saevakuacio gasavlelis maCvenebeli
- kvamlis aRmomCeni sistema
- kvamlze moreagire mauwyebeli
- saxanZro gangaSis Rilaki
- saxanZro mildgari
- saxanZro hidranti
- xelis cecxlmaqri
- gasasvlelis saavario ganaTeba
- avtosaSxefi

kafe-restorani
q. Tbilisi. sanapiro q. N10 s/k 01.15.03.004.021

EB MINDIA
შპს EB.MINDIA said. 205267968
0160 Tbilisi gagarinis q. #10
tel. 2372294, mob. 599-399336
el-fosta: b.jmukhi@gmail.com

mTav. arqiteqtori	b. jmuxaZe
arqiteqtori	b. jmuxaZe
dizaini	m. ZamaSvili
arqiteqturuli nawili	Wrili 2 da 3 arsebuli
stadia proeqti	
masStabi	furceli a-7
	TariRi 2022 w.

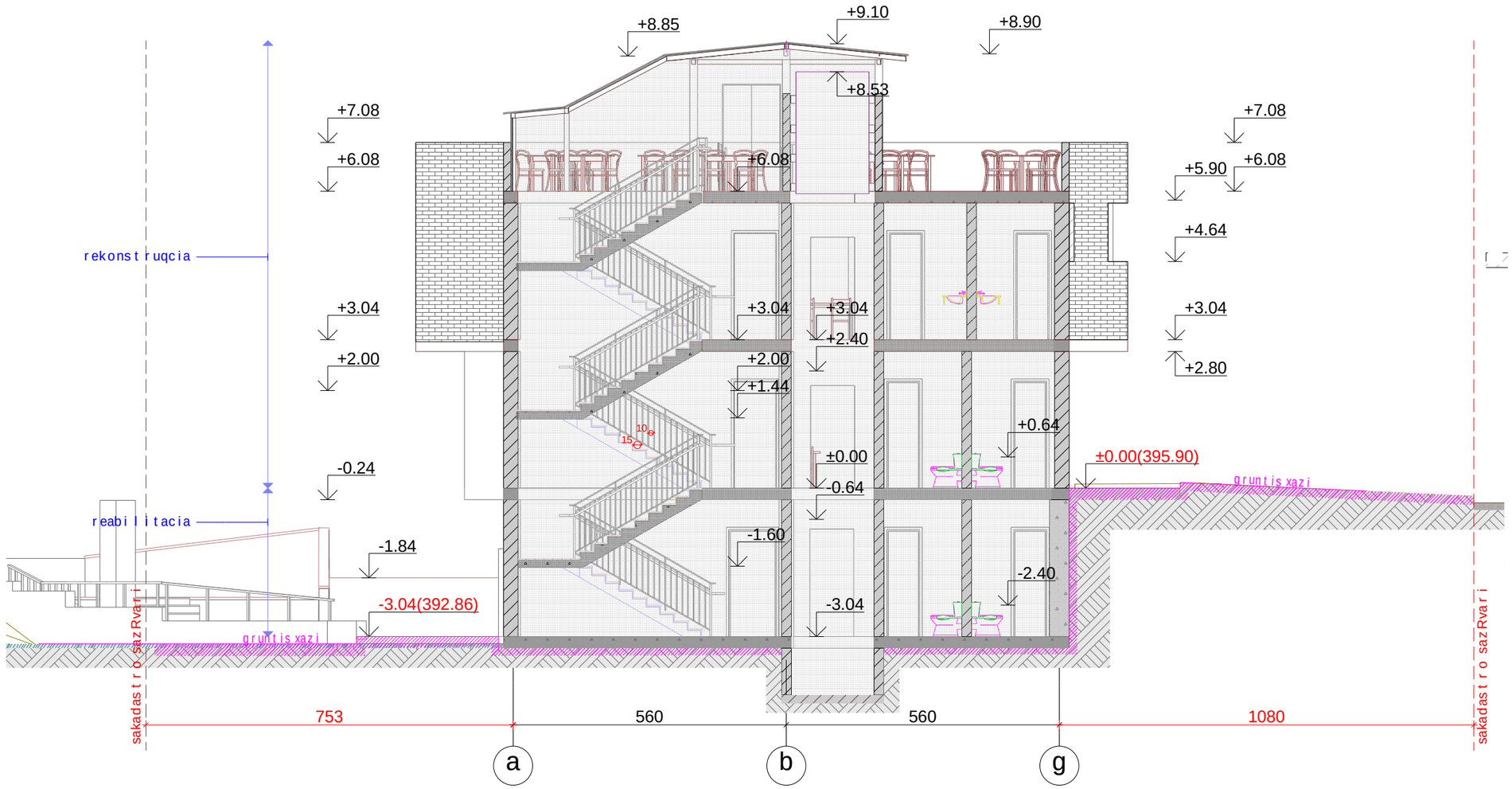

formati A-3	Tbilisi 2020 w.	

dakavebuli obebi

pirobiTi niSnebi

- sakadastro sazRvari
- TavSeyris jgufi (Tv-2)
- damxmare da sxvadasxva daniSnulebis jgufi (ds)
- samrewvelo jgufi (sm-1)
- gasasvlelamde maqsimaluri savali manZili (g.s.m)
- misawvdomi svla-gezi
- struqturuli anawyobis(kedlis) xanZarmedegobis xarisxi 1 saaTi
- struqturuli anawyobis(kedlis) xanZarmedegobis xarisxi 2 saaTi
- XX.XX iatakis saproeqto niSnuli
- 1—1 Wrilis xazi
- X—X RerZis xazi
- saxanZro ganyofilebasTan kavSiris sistema
- sagangebo xmovani gangaSis sakomunikacio sistema
- saevakuacio gasavlelis maCvenebeli
- kvamlis aRmomCeni sistema
- kvamlze moreagire mauwyebeli
- saxanZro gangaSis Rilaki
- saxanZro mildgari
- saxanZro hidranti
- xelis cecxlmaqri
- gasasvlelis saavario ganaTeba
- avtosaSxefi

kafe-restorani

q. Tbilisi. sanapiro q. N10 s/k 01.15.03.004.021

EB MINDIA

შპს EB.MINDIA said. 205267968

0160 Tbilisi gagarinis q. #10

tel. 2372294, mob. 599-399336

el-fosta: b.jmukhi@gmail.com

mT. arqiteqtori	b. jmuxaZe
arqiteqtori	b. jmuxaZe
dizaini	m. ZamaSvili
arqiteqturuli nawili	Wrili 1
stadia proeqti	
masStabi 1:100	furceli a-8
	TariRi 2022 w.

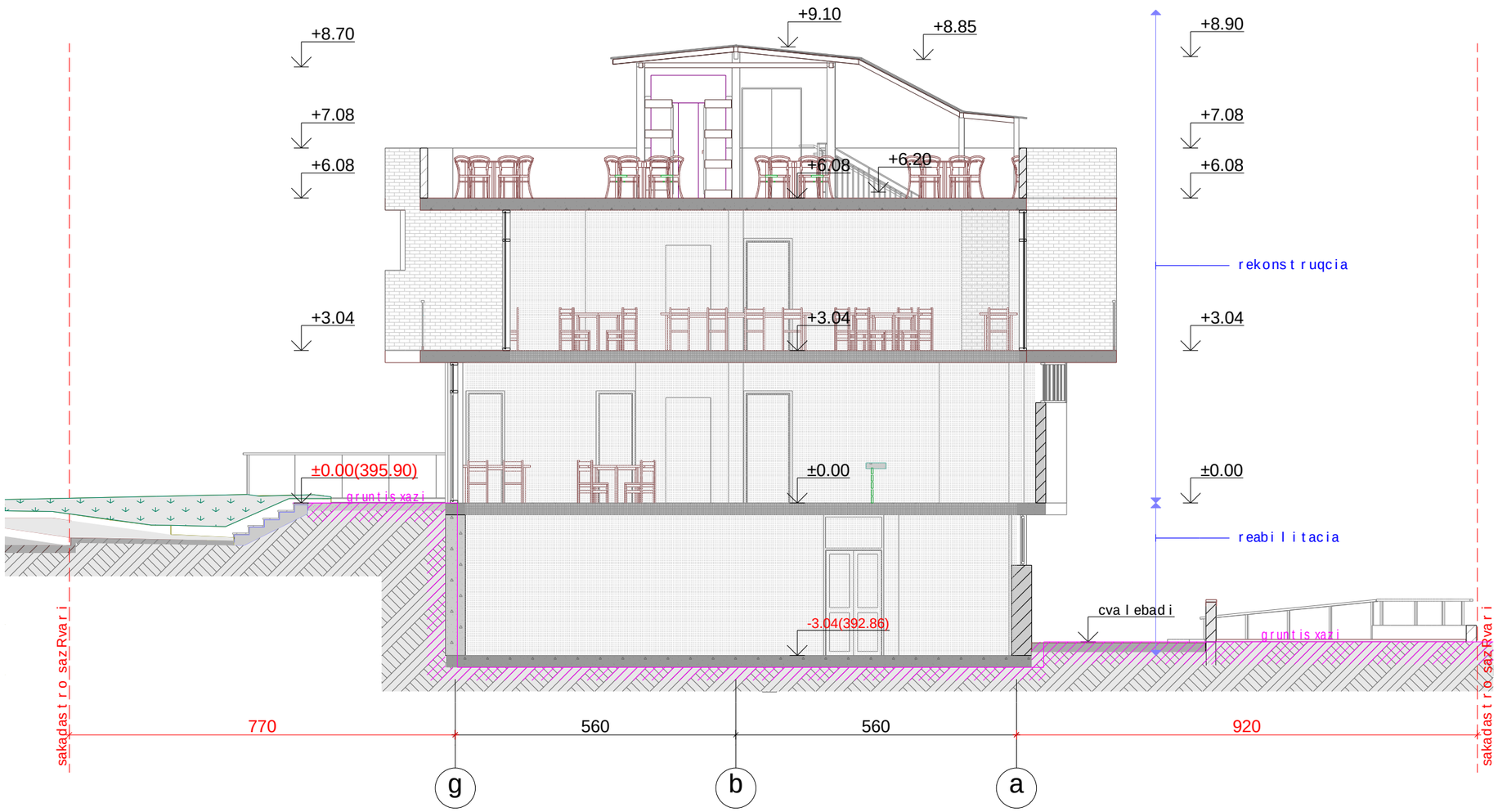

formati	Tbilisi
A-3	2020 w.

dakavebulobebi

pirobiTiniSnebi

- sakadastro sazRvari
- TavSeyris jgufi (Tv-2)
- damxmare da sxvadasxva daniSnulebis jgufi (ds)
- samrewvelo jgufi (sm-1)
- gasasvlelamde maqsimaluri savali manZili (g.s.m)
- misawvdomi svla-gezi
- struqturuli anawyobis(kedlis) xanZarmedegobis xarisxi 1 saaTi
- struqturuli anawyobis(kedlis) xanZarmedegobis xarisxi 2 saaTi
- XX.XX iatakis saproeqto niSnuli
- Wrilis xazi
- RerZis xazi
- saxanZro ganyofilebasTan kavSiris sistema
- sagangebo xmovani gangaSis sakomunikacio sistema
- saevakuacio gasavlelis maCvenebeli
- kvamlis aRmomCeni sistema
- kvamlze moreagire mauwyebeli
- saxanZro gangaSis Rilaki
- saxanZro mildgari
- saxanZro hidranti
- xelis cecxlmaqri
- gasasvlelis saavario ganaTeba
- avtosaSxefi

kafe-restorani
q. Tbilisi. sanapiro q. N10 s/k 01.15.03.004.021

EB MINDIA
EB.MINDIA said. 205267968
0160 Tbilisi gagarinis q. #10
tel. 2372294, mob. 599-399336
el-fosta: b.jmukhi@gmail.com

mT. arqiteqtori	b. jmuxaZe
arqiteqtori	b. jmuxaZe
dizaini	m. ZamaSvili
arqiteqturuli nawili	Wrili 2
stadia proeqti	

masStabi	furceli	TariRi
1:100	a-9	2022 w.

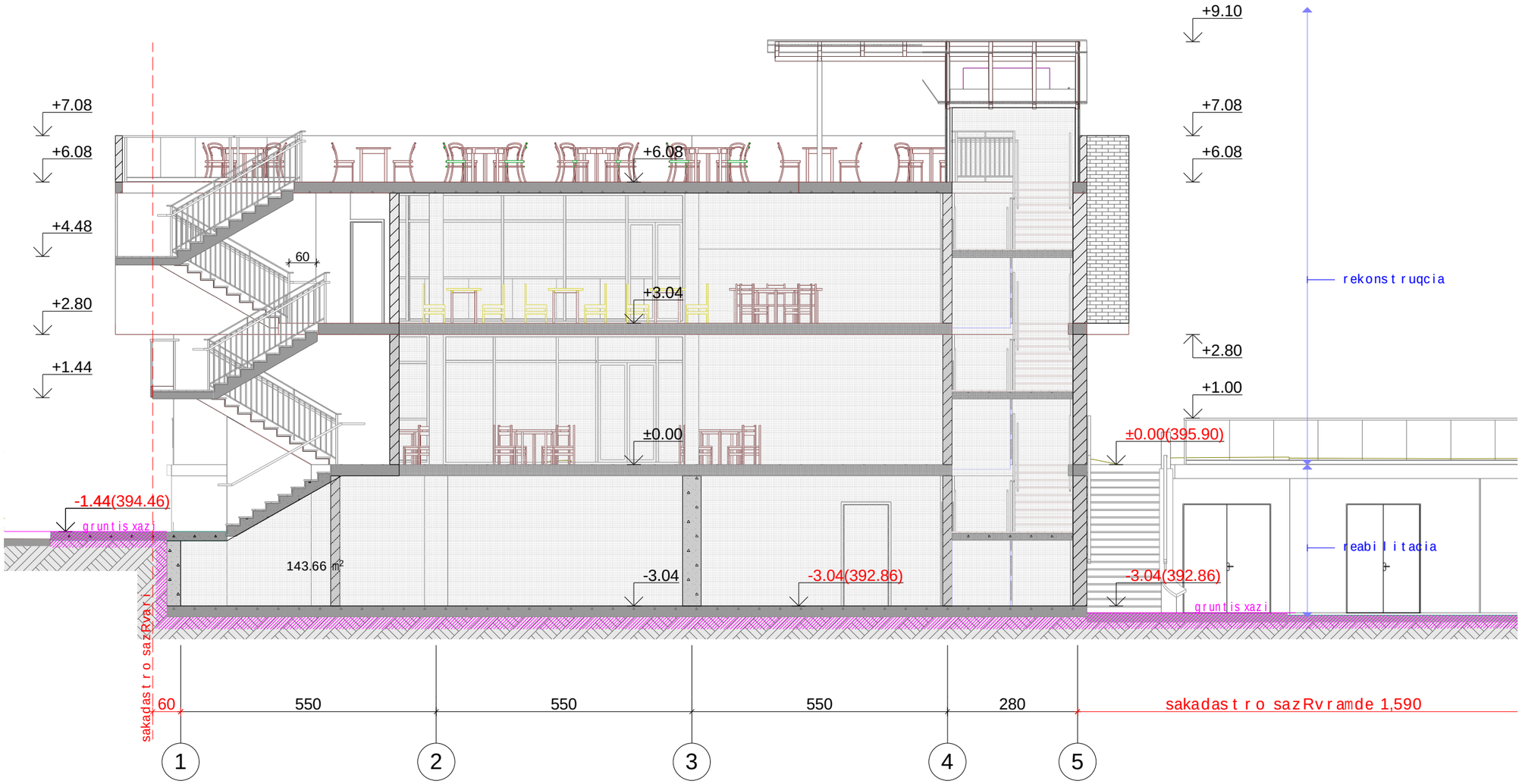

formati	Tbilisi
A-3	2020 w.

dakavebuli obebi

pirobiTi niSnebi

- sakadastro sazRvari
- TavSeyris jgufi (Tv-2)
- damxmare da sxvadasxva daniSnulebis jgufi (ds)
- samrewvelo jgufi (sm-1)
- gasasvlelamde maqsimaluri savali manZili (g.s.m)
- misawvdomi svla-gezi
- struqturuli anawyobis(kedlis) xanZarmedegobis xarisxi 1 saaTi
- struqturuli anawyobis(kedlis) xanZarmedegobis xarisxi 2 saaTi
- XX.XX iatakis saproeqto niSnuli
- 1 — 1 Wrilis xazi
- X — X RerZis xazi
- saxanZro ganyofilebasTan kavSiris sistema
- sagangebo xmovani gangaSis sakomunikacio sistema
- saevakuacio gasavlelis maCvenebeli
- kvamlis aRmomCeni sistema
- kvamlze moreagire mauwyebeli
- saxanZro gangaSis Rilaki
- saxanZro mildgari
- saxanZro hidranti
- xelis cecxlmaqri
- gasasvlelis saavario ganaTeba
- avtosaSxefi

kafe-restorani

q. Tbilisi. sanapiro q. N10 s/k 01.15.03.004.021

EB MINDIA

EB.MINDIA said. 205267968
0160 Tbilisi gagarinis q. #10
tel. 2372294, mob. 599-399336
el-fosta: b.jmukhi@gmail.com

mTavarqiteqtori	b. jmuxaZe
arqiteqtori	b. jmuxaZe
dizaini	m. ZamaSvili
arqiteqturuli nawili	Wrili 3
stadia proeqti	
masStabi 1:100	furceli a-10
TariRi 2022 w.	

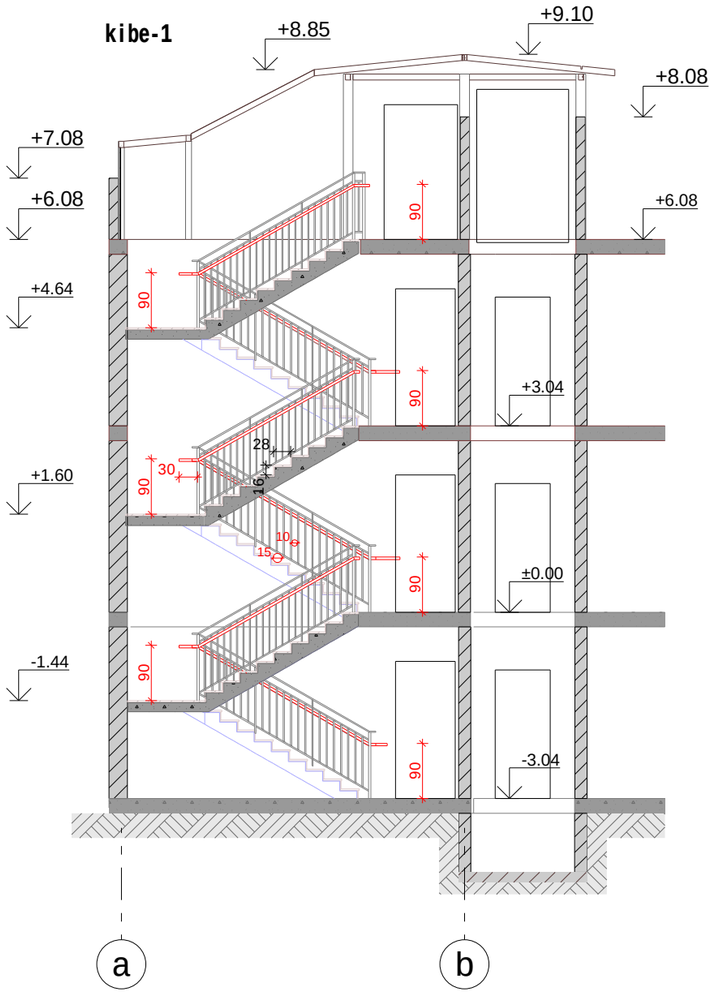

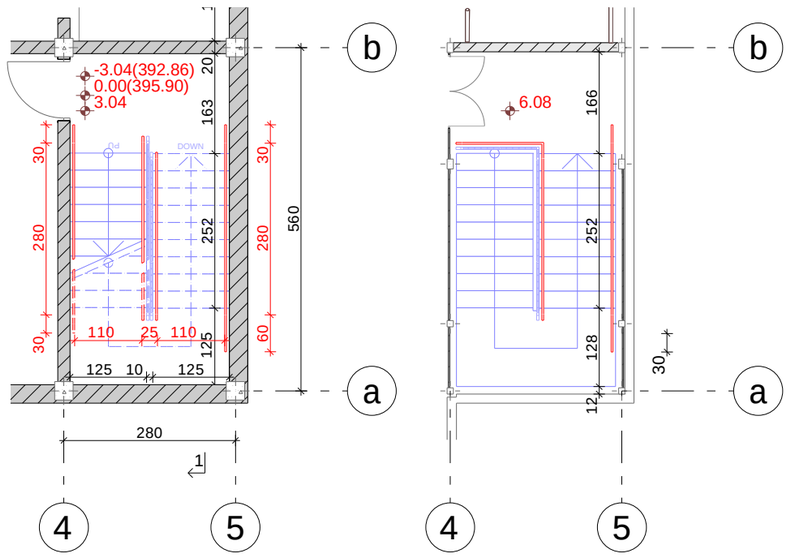

parapetis detali

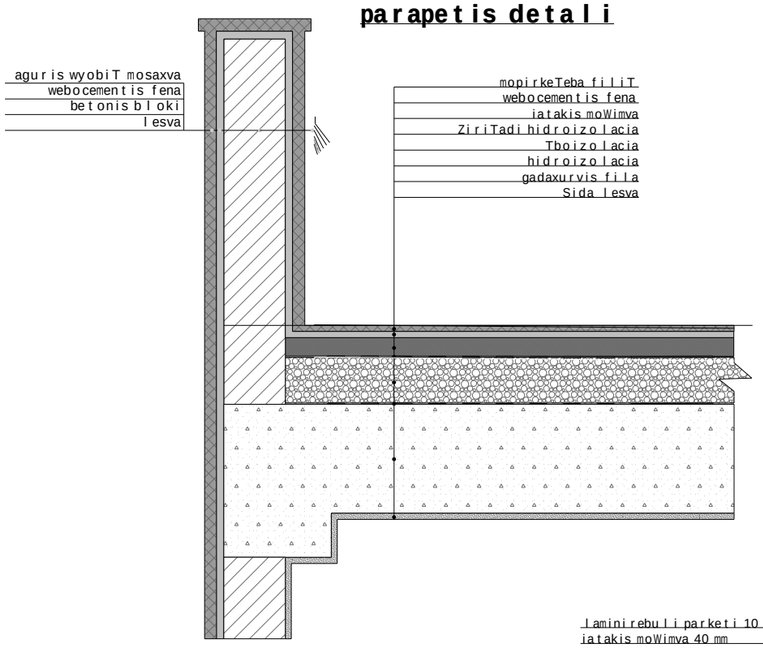

iatakis detali

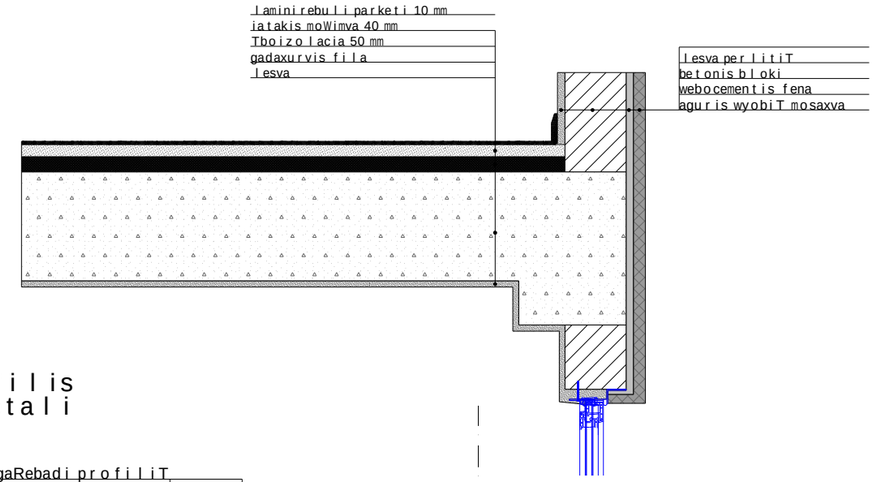

fanjris profilis damagrebis detali

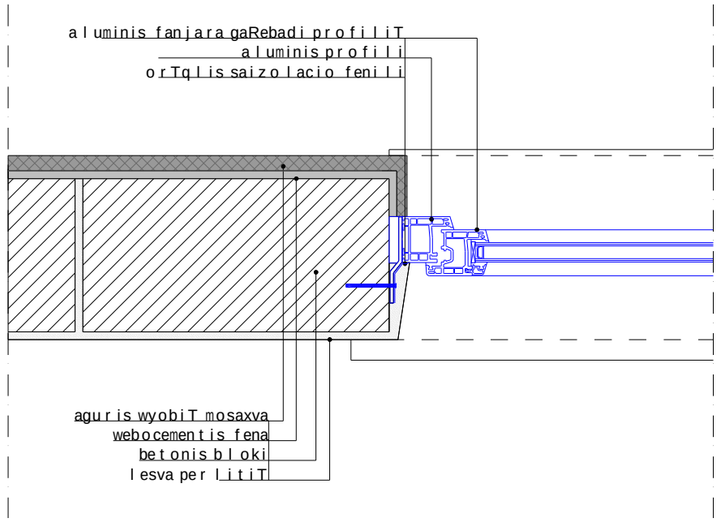

formati	Tbilisi
A-3	2020 w.

dakavebulobebi

pirobiTiniSnebi

- sakadastro sazRvari
- TavSeyris jgufi (Tv-2)
- damxmare da sxvadasxva daniSnulebis jgufi (ds)
- samrewvelo jgufi (sm-1)
- gasasvlelamde maqsimaluri savali manZili (g.s.m)
- misawvdomi svla-gezi
- struqturuli anawyobis(kedlis) xanZarmedegobis xarisxi 1 saaTi
- struqturuli anawyobis(kedlis) xanZarmedegobis xarisxi 2 saaTi
- XX.XX iatakis saproeqto niSnuli
- Wrilis xazi
- RerZis xazi
- saxanZro ganyofilebasTan kavSiris sistema
- sagangebo xmovani gangaSis sakomunikacio sistema
- saevakuacio gasavlelis maCvenebeli
- kvamlis aRmomCeni sistema
- kvamlze moreagire mauwyebeli
- saxanZro gangaSis Rilaki
- saxanZro mildgari
- saxanZro hidranti
- xelis cecxlmaqri
- gasasvlelis saavario ganaTeba
- avtosaSxefi

kafe-restorani
q. Tbilisi. sanapiro q. N10 s/k 01.15.03.004.021

EB MINDIA
შპს EB.MINDIA said. 205267968
0160 Tbilisi gagarinis q. #10
tel. 2372294, mob. 599-399336
el-fosta: b.jmukhi@gmail.com

mT. arqiteqtori	b. jmuxaZe
arqiteqtori	b. jmuxaZe
dizaini	m. ZamaSvili
arqiteqturuli nawili	kibe-1, detalebi
stadia proeqti	

masStabi	furceli	TariRi
1:100	a-18	2022 w.

kibe-2

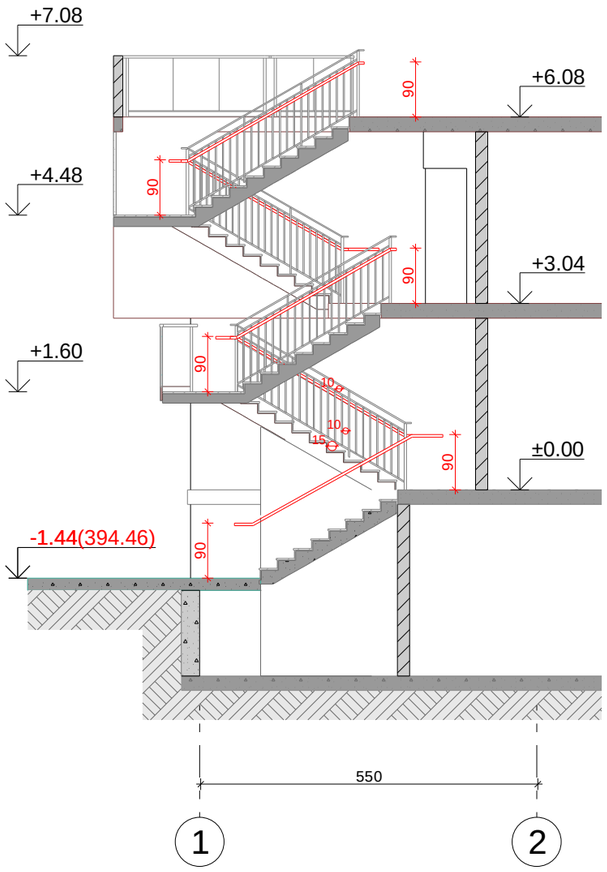

moajirisWrilim.1:20

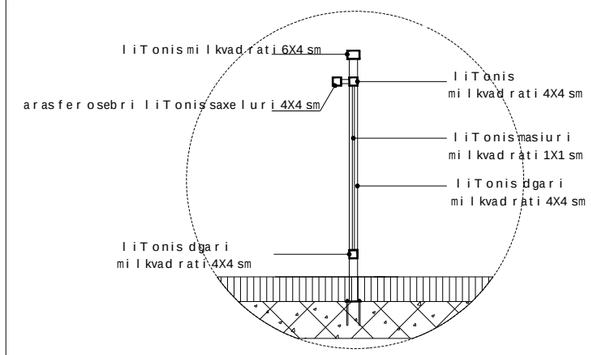

moajirisWrilim.1:20

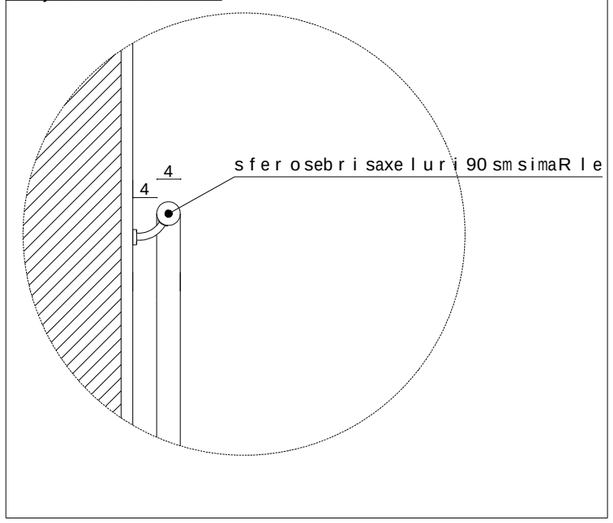

moajirisdetalim.1:20

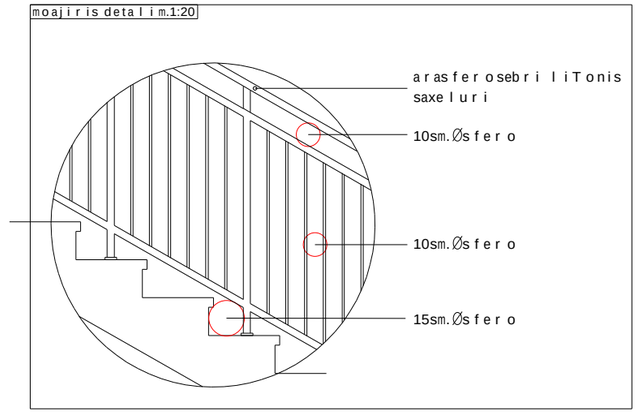

safexurisdetalim.1:10

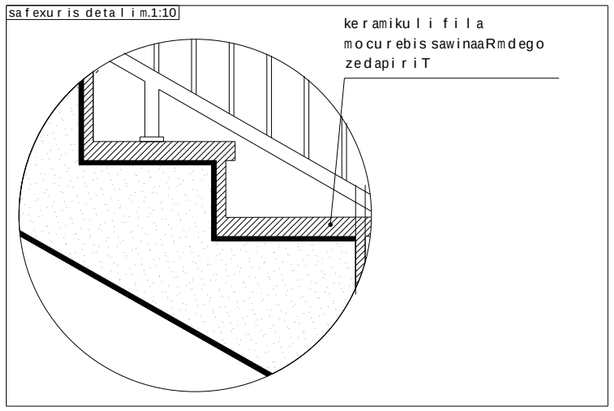

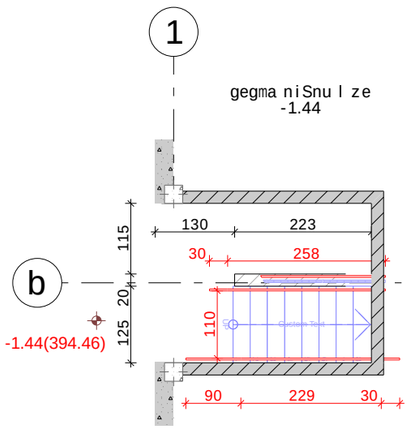

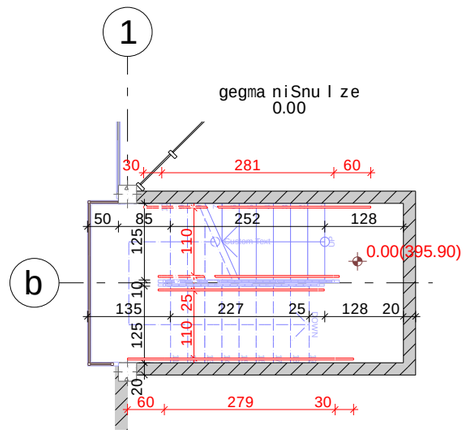

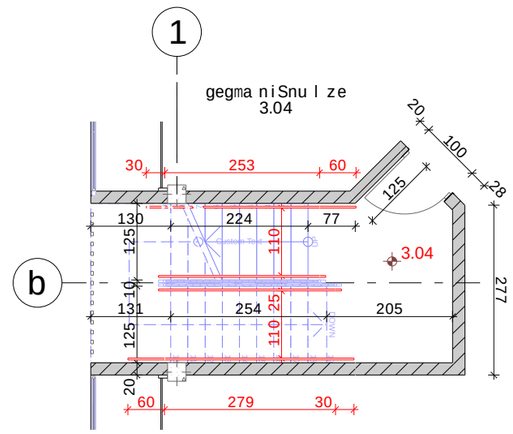

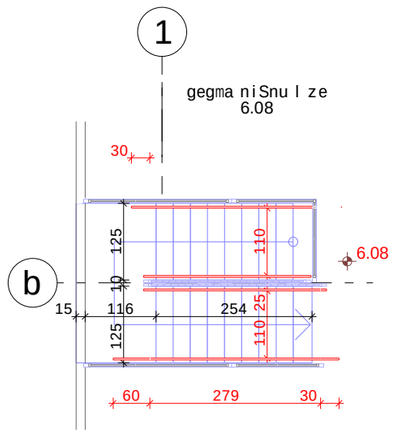

formati A-3

Tbilisi 2020 w.

dakavebuli obebi

pirobiTi niSnebi

- sakadastro sazRvari
- TavSeyris jgufi (Tv-2)
- damxmare da sxvadasxva daniSnulebis jgufi (ds)
- samrewvelo jgufi (sm-1)
- gasasvlelamde maqsimaluri savali manZili (g.s.m)
- misawvdomi svla-gezi
- struqturuli anawyobis(kedlis) xanZarmedegobis xarisxi 1 saaTi
- struqturuli anawyobis(kedlis) xanZarmedegobis xarisxi 2 saaTi
- XX.XX iatakis saproeqto niSnuli
- 1 — 1 Wrilis xazi
- X — X RerZis xazi
- saxanZro ganyofilebasTan kavSiris sistema
- sagangebo xmovani gangaSis sakomunikacio sistema
- saevakuacio gasavlelis maCvenebeli
- kvamlis aRmomCeni sistema
- kvamlze moreagire mauwyebeli
- saxanZro gangaSis Rilaki
- saxanZro mildgari
- saxanZro hidranti
- xelis cecxlmaqri
- gasasvlelis saavario ganaTeba
- avtosaSxefi

kafe-restorani

q. Tbilisi. sanapiro q. N10 s/k 01.15.03.004.021

EB MINDIA

შპს EB.MINDIA said. 205267968
0160 Tbilisi gagarinis q. #10
tel. 2372294, mob. 599-399336
el-fosta: b.jmukhi@gmail.com

mT. arqiteqtori	b. jmuxaZe
arqiteqtori	b. jmuxaZe
dizaini	m. ZamaSvili
arqiteqturuli nawili	kibe-2, detalebi
stadia proeqti	
masStabi 1:100	furceli a-19
	TariRi 2022 w.