Wrili 1-1
masStabi 1;100

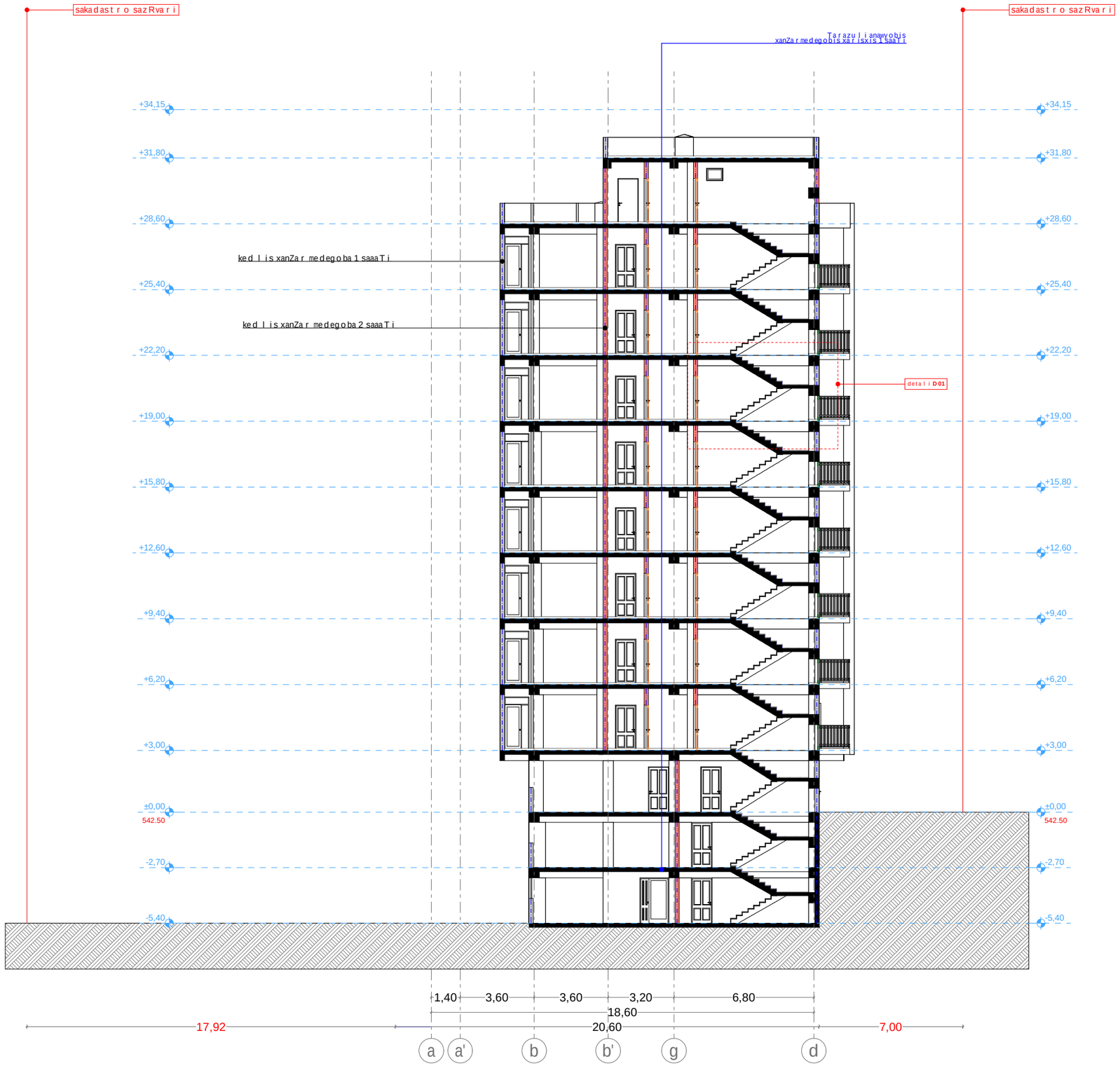

xelSekruleba #	

pirobiTi aRniSvnebi

- a — RerZis xazi
- sakadastro sazRvari
- Wrilis xazi
- blokis kedeli
- blokis kedeli binebis gamyofi
- gZlierebuli betonis kedeli-sveti
- gaTboba kondicirebis adgili
- misawvdomi svla gezi
- gasasvlelamde misadgomi manZili
- sc-2 / d.d.3 — dakavebulobis jgufi (qvejgufi); dakavebulobis datvirTva
- b. #4 56.8 / 43.6 13.2 — saerTo farTi; sazafxulo faraTi; farTobi Sida konturze; bina #
- Riobi filaSi
- kedlis cecxlmedegoba (erTsaaTiani)
- kedlis cecxlmedegoba (orsaaTiani)
- sadarbazo
- grunti
- mwvane safari
- cxauri tipis mopirkeTeba (gamWoli)
- struqturuli zedapiris aRniSvana
- C — CrdiloeTis aRniSvna

	simbolos saxelwodeba
	saxanZro mildgari
	saxanZro ganyofilebas TankavSiris sistema
	sagangebo xmovani gangaSis sakomunikacio sistema
	xelis cecxlmaqri
	saxanZro-samaSvelo samsaxuris mier gamosayenebeli misaerTebeli-hidranti
	kvamlis avtomaturi aRmomCeni
	kvamlze moreagire mauwyebeli
	avtosaSxefi
	saxanZro gangaSis xeliT samarTvai kolofi
	gasasvleli

SeniSvna

1. Senobis monoliTuri kolonebis, rigelebis raodenoba da kofiguracia SeiZleba Seicvalos Senobis gabaritebis da vizualis ucvlelad konstruqtoris moTxovnis safuZvelze
2. proeqtSi naCvenebi reliefis konfiguracia SeiZleba Seicvalos mcirediT
3. Senobis gare da Sida kibis safexurebis raodenoba SeiZleba Seicvalos
4. vitraJebis karisa da sxva Riobebis moZravi frTebis mimarTuleba da roadoneboa SeiZleba iyos sxvadasxva. Sesabamisad SeiZleba Seicvalos profilis sisqe.

S.p.s. "ai maqs +"		
Tanamdeboba	gvari	xelmowera
direqtori	d. SavTvalaZe	
arqiteqtori	i. xavTasi	
daamuSava	d. munjiSvili	

damkveTi:	levan gobejiSvili

proeqtis saxelwodeba:
mravalbiniani sacxovrebeli saxli

misamarTi:
q. Tbilisi, emzar sulaqveliZis quCa #3
s/k 01.17.07.031.048

masStabi	naxazis dasaxeleba
1:100	Wrili 1-1

stadia	TariRi	formati
arq. nawili	26/12/2018	A1

W r i l i 2-2
masStabi 1;100

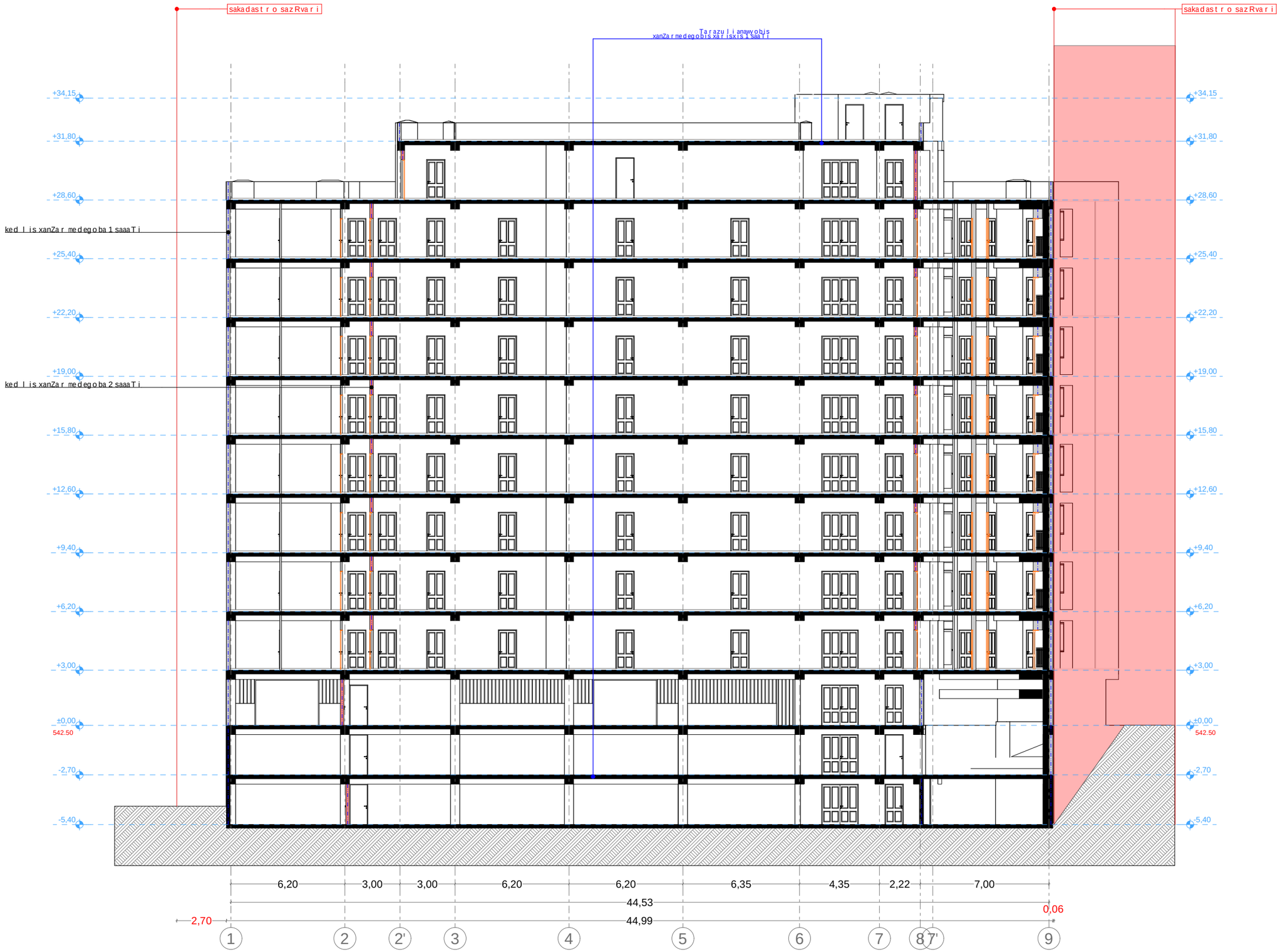

xe l Sekruleba #

p i r o b i T i a R n i S v n e b i

- RerZis xazi
- sakadastro sazRvari
- W r i l i s xazi
- b l o k i s kedeli
- b l o k i s kedeli binebis gamyofi
- gZlierebuli betonis kedeli-sveti
- gaTboba kondicirebis adgili
- misawvdomi svla gezi
- gasasvlelamde misadgomi manZili
- sc-2 / d.d.3 — dakavebulobis jgufi (qvejgufi) / dakavebulobis datvirTva
- b. #4 | 56.8 / 43.6 | 13.2 — saerTo farTi / sazafxulo faraTi
- farTobi Sida konturze
- bina #
- R i o b i f i l a S i
- kedlis cecxlmedegoba (erTsaaTiani)
- kedlis cecxlmedegoba (orsaaTiani)
- sadarbazo
- grunti
- mwvane safari
- cxauri tipis mopirkeTeba (gamWoli)
- s t r u q t u r u l i zedapiris aRniSvana
- C r d i l o e T i s aRniSvna

	s i m b o l o s saxe l w o d e b a
	saxanZ r o m i l d g a r i
	saxanZ r o ganyo f i l e b a s TankavSir i s sistema
	sagangebo xmovani gangaSis sakomunikacio sistema
	xe l i s cecx l maq r i
	saxanZ r o-samaSve l o sapasuxur i s mier gamoyenebe l i misaer Tebe l i - hidranti
	kvam l i s avtomaturi aRmoCeni
	kvam l z e mo r e a g i r e mauwyebe l i
	avtosaSxefi
	saxanZ r o gangaSis xe l i T samar Tvai ko l o f i
	gasasv l e l i

S e n i S v n a

1. S e n o b i s mono l i T u r i ko l o n e b i s, r i g e l e b i s r a o d e n o b a da k o f i g u r a c i a SeiZleba Seicvalos S e n o b i s gabar i t e b i s da v i z u a l u r i s ucv l e l a d konstruqtor i s noTxovnis safuZvel ze
2. p r o e q t i Si naCvenebi r e l i e f i s k o n f i g u r a c i a SeiZleba Seicvalos n c i r e d i T
3. S e n o b i s gare da Sida kibis safexurebis r a o d e n o b a SeiZleba Seicvalos
4. v i t r a J e b i s karisa da sxva R i o b e b i s moZravi fr Tebis nimarTuleba da r o a d o n e b o a SeiZleba iyos sxvadasxva. Sesabamisad SeiZleba Seicvalos p r o f i l i s sisqe.

S.p.s. "ai maqs +"		
Tanamdeboba	gvari	x e l m o w e r a
d i r e q t o r i	d. SavTvalaZe	
a r q i t e q t o r i	i. xavTasi	
daamuSava	d. munjiSv i l i	

damkveTi:	l e v a n g o b e j i Sv i l i
p r o e q t i s saxe l w o d e b a:	m r a v a l b i n i a n i sacxovrebeli saxli
m i s a m a r T i:	q. Tbilisi, emzar sulaqveliZis quCa #3 s/k 01.17.07.031.048

masStabi	naxazis dasaxeleba
1:100	W r i l i 2-2

s t a d i a	TariRi	f o r m a t i
a r q. n a w i l i	26/12/2018	A1

detali **D01** (Wrili 1-1)

Tarazuli anawyobis xanZarmedegobis xarisxis 1 saaTi

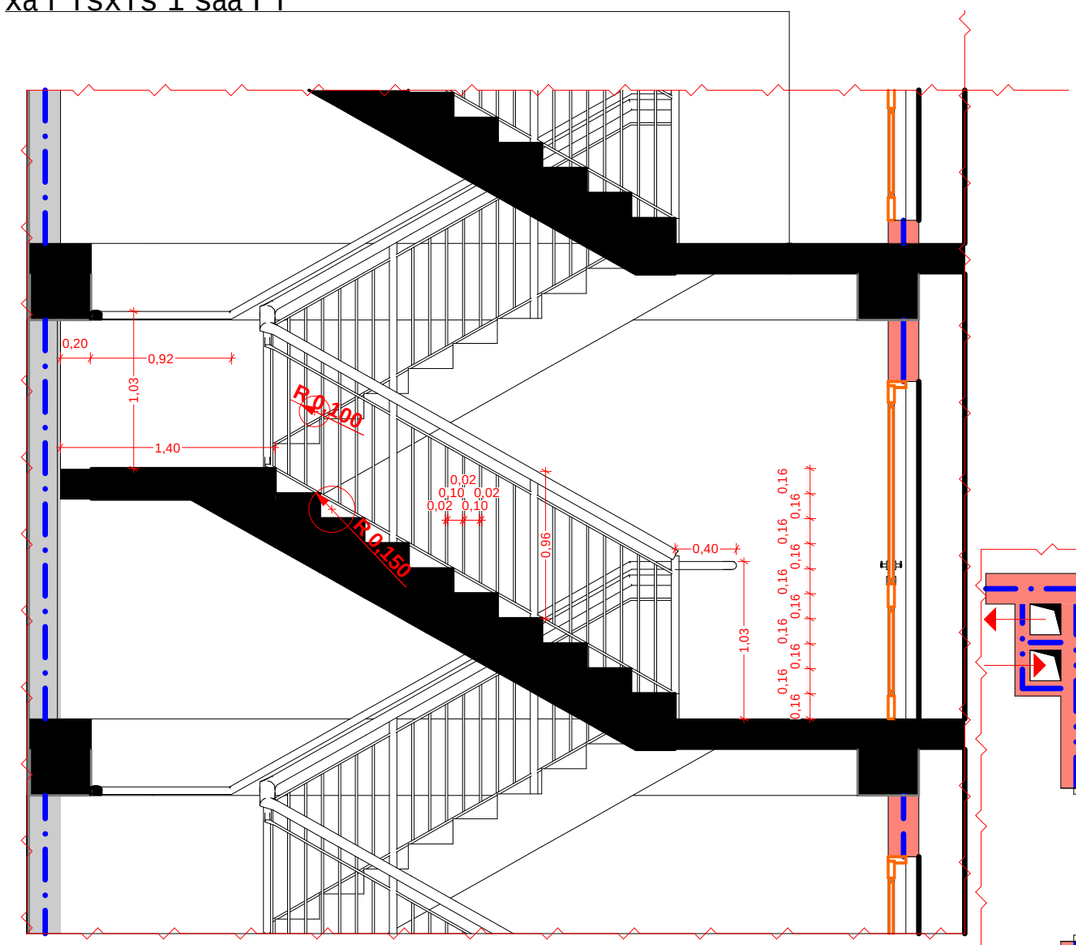

saxeluri

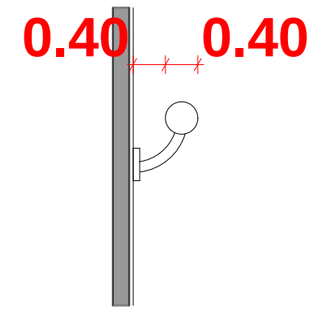

detali gegma

kedlis xanZarmedegoba 2 saaTi

kedlis xanZarmedegoba 1 saaTi

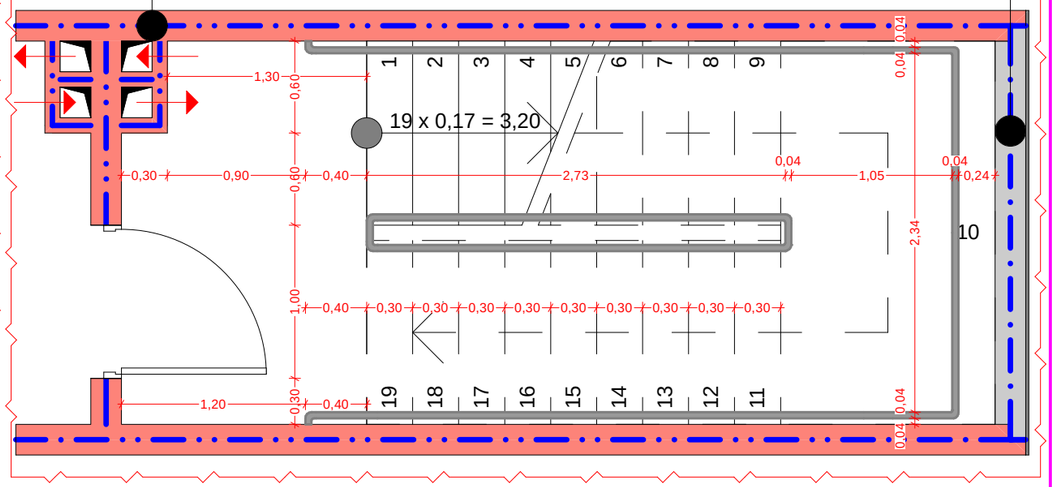

aivnismoajiri

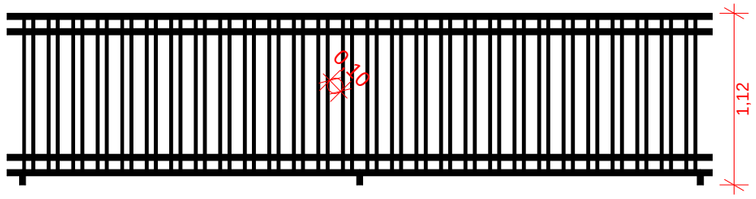

xelSekruleba #

pirobiTi aRniSvnebi

- a — RerZis xazi
- sakadastro sazRvari
- Wrilis xazi
- blokis kedeli
- blokis kedeli binebis ganyofi
- gZlierebuli betonis kedeli-sveti
- gaTboba kondicirebis adgili
- misawvdomi svla gezi
- gasasvlelande misadgomi manZili
- sc-2 / d.d.3 — dakavebulobis jgufi (qvejgufi) / dakavebulobis datvirTva
- b. #4 56.8 / 43.6 13.2 — saerTo farTi / sazafxulo faraTi
- farTobi Sida konturze bina #
- Riobi filaSi
- kedlis cecxlmedegoba (erTsaaTiani)
- kedlis cecxlmedegoba (orsaaTiani)
- sadarbazo
- grunti
- mwvane safari
- cxauri tipis mopirkeTeba (gamlioli)
- struqturuli zedapiris aRniSvana
- CrdiloeTis aRniSvna

SeniSvna

1. Senobis monoliTuri kolonebis, rigelebis raodenoba da konfiguracia SeiZleba Seicvalos Senobis gabaritebis da vizualis ucvlelad konstruqtoris moTxovnis sarezerve
2. proeqtSi naCvenebi reliefis konfiguracia SeiZleba Seicvalos nciredi T
3. Senobis gare da Sida kibis safexurebis raodenoba SeiZleba Seicvalos
4. vitraJebis karisa da sxva Riobebis mozravi frTebis minarTuleba da roadoneboa SeiZleba iyos sxvadasxva. Sesabamisad SeiZleba Seicvalos profilis siqe.

S.p.s. "ai maqs +"		
Tanamdeboba	gvari	xelmowera
direqtori	d. SavTvalaZe	
arqiteqtori	i. xavTasi	
daamuSava	d. munjiSvili	

damkveTi:	levan gobejiSvili
proeqtis saxelwodeba:	mravalbiniani sacxovrebeli saxli
misamarTi:	q. Tbilisi, emzar sulaqveliZis quCa #3 s/k 01.17.07.031.048

masStabi	naxazis dasaxeleba
1:25	kibis ujredisa da aivnis moajiris specifikacia

stadia	TariRi	formati
arq. nawili	18/11/2018	A3