მწარმოებელი:
შპს „ელ+“

საკონტაქტო ინფორმაცია:

მის:
ქ.თბილისი. ბერი გაბრიელ სალოსის გამზ. N126

ტელ:
2-47-07-87

Website:
www.elplus.ge

E-mail:
info@elplus.ge

შესაბამისობის სერტიფიკატი

პროდუქტის დასახელება:

ცეცხლმედეგი კარი

ცეცხლმედეგობა - 90 წთ

პროდუქტის მოდელი:

ELP-FD-SL

ELP-FD-DL

წარმოების წელი:

2021

სტანდარტთან შესაბამისობა:

შპს „ელ+“ ადასტურებს, რომ ჩვენს მიერ წარმოებული ცეცხლმედეგი კარი წარმოებულია EN 16034:2014 სტანდარტის შესაბამისად.



ლაშა ჭუმბურიძე

LGAI Technological Center, S.A. (APPLUS)
Polígono Industrial del Henares
C/Nitra 3. Nave 106 D
E – 19004 Guadalajara
www.appluslaboratories.com

SUMMARY OF RESULTS



Summary letter date if issue:	**April 28, 2021**
Sponsor reference:	**Ltd "EL+** Beri Gabriel Salosi Avenue 126, Tbilisi, Georgia 0113
Test date:	**April 26th, 2021**
Test Standard:	**UNE EN 1634-1:2016+A1:2018**
File number:	**21/23429-439**

LGAI Technological Center, S.A. N.I.F A63207492

Ltd EL+. has performed the following test, the information on this summary represent only the samples and condition tested, the complete information is described in the test report with the same file number indicated above.

REQUESTED TEST

Test performed on a single hinged metal door. Dimensions and characteristics of the sample are the following:

Two door with client reference "EL-FD-SL": Single hinged metal door, opening outwards the furnace:

- Overall dimensions: 2215 x 1000 mm (height x width)
- Overall dimensions of clear opening: 2130 x 885 mm (height x width)
- Overall dimensions of the leaf: 2155 x 920 x 54 mm (height x width x thickness)

Classification (acc. UNE EN 13501-2:2009+A1:2010):

E 120 Cat. B

Juan Santos Granados
Technical Responsible Fire Resistance Laboratory Madrid Division

This document does not represent a test or classification report. "Applus + guarantees that this work has been carried out within the requirements of our Quality and Sustainability System, having met the contractual conditions and legal regulations. As part of our improvement program, we would like to thank you for transmitting any comment you consider appropriate, by addressing the person in charge who signs this letter, or the Applus + Quality Director, at the address: satisfaccion.cliente@applus.com The results indicated refer exclusively to the sample, product or material delivered to the laboratory and tested under the conditions indicated in the standards or procedures cited in this document. The reproduction of this document is only authorized if it is done in its entirety. Reports electronically signed in digital support are considered an original document, as well as electronic copies thereof. Its printing on paper has no legal validity.

LGAI Technological Center, S.A. (APPLUS)
Polígono industrial del Henares
C/Nitra, 3. Nave 106 D. Cp. 19004 Guadalajara
T +34 949 750690
www.appluslaboratories.com

Title:
Test report for determine the fire resistance of three hinged metal single leaf doors, exposed to the fire on one side, in accordance with the Standard EN 1634-1:2014+A1:2018: "Fire resistance and smoke control tests for door and shutter assemblies, openable windows and elements of building hardware – Part 1: Fire resistance test for door and shutter assemblies and openable windows" and the Standard EN 1363-1:2020: "Fire resistance tests. Part 1: General Requirements".

Tested material:

- Three hinged metal single leaf doors, two with reference ELP-FPD-SL- Single Leaf Fire Panic door and one with reference ELP-FD-SL-Single Leaf Fire door.

The reference of the samples has been provided by the sponsor.
The test specimens have been provided by LTD EL+.

File number: 21/23426-439

Sponsor:
LTD EL+
Beri Gabriel Salosi St. 126
Tbilisi Georgia

Report date:

5 August 2021

Test date:
26 April 2021

The reproduction of this document is only authorised if it is made in its totality. Electronically signed reports in digital format are considered original documents, as well as its electronic copies. Their printing has no legal validity.
This document includes 169 pages of which 151 are annexes.

MATERIAL RECEIVED:

Three hinged metal single leaf doors, two with reference ELP-FPD-SL- Single Leaf Fire Panic door and one with reference ELP-FD-SL-Single Leaf Fire door, all provided by LTD EL+, have been received (reference of samples provided by the sponsor). Details of the samples are described in section 3 Samples tested of this report.

The assembly has been carried out by the sponsor at the premises of LGAI Technological Center S.A., located in C/ Nitra nº 3, Nave 106 D, 19004 Guadalajara (Spain). The test has been carried out in the above mentioned facilities.

The samples received at LGAI Technological Center S.A. facilities, are accompanied by a sampling dated 19/04/2021, carried out by Applus on factory of LTD EL+ in Monk Gabriel solosi av.126, 0113, Tbilisi, Georgia.

TEST REQUESTED:

Determination of the fire resistance of three hinged metal single leaf doors, exposed to fire on one side (one door opens inwards the furnace and the other doors outwards the furnace), in accordance with the Standard EN 1634-1:2014+A1:2018: "Fire resistance and smoke control tests for door and shutter assemblies, openable windows and elements of building hardware – Part 1: Fire resistance test for door and shutter assemblies and openable windows", and the EN 1363-1:2020: "Fire resistance tests. Part 1: General Requirements".

INDEX

1. AIM OF THE TEST
2. GENERAL CHARACTERISTICS OF THE FURNACE
3. SAMPLES TESTED
4. VERIFICATIONS PRIOR TO THE TEST
5. TEST PREPARATION
6. OBTAINED RESULTS
7. EQUIPMENT
8. FIELD OF APPLICATION
9. ANNEXES
    A. REMARKS DURING THE TEST
    B. PICTURES
    C. FIGURES
    D. TECHNICAL SPECIFICATIONS PROVIDED BY THE SPONSOR

1. AIM OF THE TEST

1.1 The samples have been subjected to the conditions specified in the Standard EN 1634-1:2014+A1:2018: "Fire resistance and smoke control tests for door and shutter assemblies, openable windows and elements of building hardware – Part 1: Fire resistance test for door and shutter assemblies and openable windows", to verify compliance with the integrity and thermal insulation criteria.

1.2 A thermal insulation failure, for doors and shutter assemblies and openable windows, happens when (section 11.2 of the Standard EN 1634-1:2014+A1:2018):

- the average temperature of the unexposed side increases by more than 140 ºC above the initial average temperature; or
- the temperature recorded at any position of the unexposed side (including the roving thermocouple) increases by more than 180 ºC above the initial average temperature, with the exception that the limit for temperature rise for any frame member or transom member adjacent to the leaf/leaves of the doorset or openable window shall be 360 ºC (exception only applicable to the normal procedure, section 11.2.4 of the Standard EN 1634-1:2014+A1:2018).

1.3 A failure of the integrity criterion is evaluated by means of a cotton pad, gap gauges and by conducting observations to record the occurrence of sustained flaming (section 10.2.2 and 11.1 of the Standard EN 1634-1:2014+A1:2018).

1.4 The radiation criterion is not evaluated.

2. GENERAL CHARACTERISTICS OF THE FURNACE

The characteristics of the furnace comply with the specifications stated in the Standard EN 1363-1:2020.

- The dimensions are 4.00 x 4.00 m, in vertical plane.

- The average temperature of the furnace, provided by 12 thermocouples, is monitored automatically to follow the temperature/time curve given by the Standard, and set by the following equation:

$$T = 345 \log_{10} (8t+1) + 20$$

- Pressure is controlled automatically so that for a position located at 3.5 m from the base of the furnace there is an overpressure of 24.1 ± 3 Pa, equivalent to 0 Pa at 0.5 m from the bottom side of the doors, following the progression stated in the Standard EN 1363-1:2020 of 8.5 Pa per meter of furnace's height.

3. SAMPLES TESTED

The laboratory has carried out different checks on the samples to be tested in order to collate the correspondence between the documentation provided by the sponsor and the samples received. The data included in this report are those provided by the sponsor and can be consulted in annex D of this report.

The characteristics of the samples received are as follow:

3.1 General characteristics:

- Door A:
  - Reference of Laboratory: 21/439-A.
  - Reference of the sponsor: ELP-FPD-SL- Single Leaf Fire Panic door.

- Door B:
  - Reference of Laboratory: 21/439-B.
  - Reference of the sponsor: ELP-FD-SL- Single Leaf Fire door.

- Door C:
  - Reference of Laboratory: 21/439-C.
  - Reference of the sponsor: ELP-FPD-SL- Single Leaf Fire Panic door.

- Door A opens inwards the furnace (hinges inside the furnace).
- Door B opens outwards the furnace (hinges outside the furnace).
- Door C opens outwards the furnace (hinges outside the furnace).

- The supporting construction does not cover the frame in all doors.

3.2 Dimensions of each door (A, B, C):

- Overall dimensions of each door: 1000 x 2200 mm (width x height).
- Overall dimensions of each clear opening: 847 x 2145 mm (width x height).
- Overall dimensions of each leaf: 918 x 2154 mm (width x height).

3.3 Composition of the leaf of each door:

- Total thickness: 52 mm.
- Constituent elements:
  - Element 1:
    - Material: galvanized steel sheet.
    - Thickness: 1.0 mm.
  - Element 2:
    - Reference: STONEWOOL BOARD.
    - Brand: Ravago.
    - Thickness: 50 mm.
    - Nominal density: 80 kg/m^3.
  - Element 3:
    - Material: galvanized steel sheet.
    - Thickness: 1.0 mm.

- Fixing method of the elements of the leaf:
  - See annex D.

- Internal reinforcements of the leaf:
  - See annex D.

3.4 Frame of each door:

- Composition:
  - Material: Galvanized steel sheet.
  - Thickness: 1.6 mm.
- Elements:
  - Door A, C: 2 jambs and one lintel.
  - Door B: 2 jambs, one lintel and one horizontal bottom element.
- Total section dimensions:
  - Door A, C: 56 x 136 mm (width x depth) (see DETAIL 1).
  - Door B: 56 x 116 mm (width x depth) (see DETAIL 2).

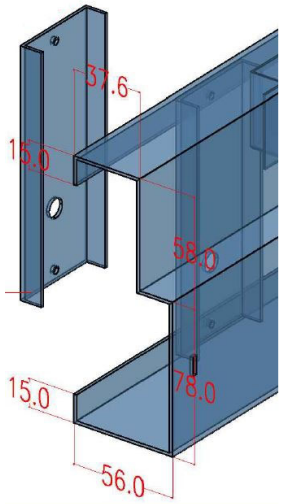

DETAIL 1. Door A, C

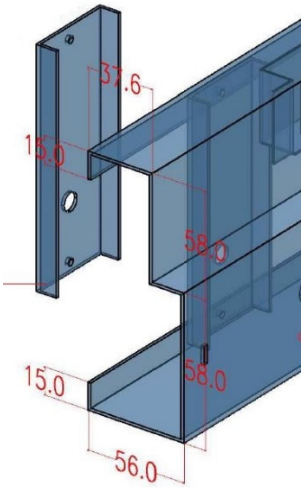

DETAIL 2. Door B

(Sketch extracted from the sponsor's technical documentation)

- Fixing technique between elements (see Annex D):
  - Union 1:
    - Type: Welded.

- Seals + rubber:
  - Seal 1 (see DETAIL 3):
    - Reference: Pyroplex®.
    - Brand: PYROPLEX.
    - Section: 20 x 2 mm.
    - Location: Internal side of the frame.

- Rubber 1 (see DETAIL 3):
  - Reference: RUBBER COMPOUND 6EP3001 (FC-30).
  - Brand: SANOK RUBBER.
  - Location: On the rebate of the frame.



DETAIL 3

3.5 Hardware (see Annex D):

Door A, C:

- Handle (see DETAIL 4):
  - Reference: PHT 01 - 3501439011001.
  - Brand: Dormakaba.
  - Quantity: 1 in each door.
  - Colour: Silver.
  - Location: exposed side (door A), unexposed side (door B).

- Cylinder (see DETAIL 4):
  - Reference: AP1000.
  - Brand: Dormakaba.
  - Quantity: 1 per door.

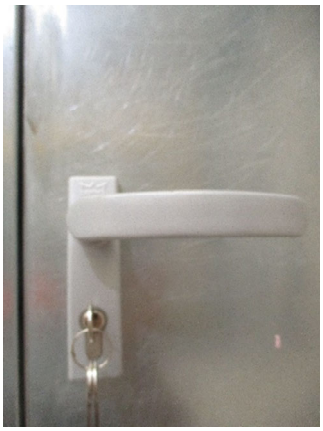

DETAIL 4

- Lock + panic bar (see DETAIL 5, 6):
    - Reference: PHA 2101 - 3501421011001.
    - Brand: Dormakaba.
    - Quantity: 1 per door.
    - Colour: Silver.
    - Location: upper edge of the latch bolt of each door placed at 1090 mm from the bottom edge of the leaf of each door.
        - Door A: Unexposed side.
        - Door C: Exposed side.



DETAIL 5



DETAIL 6

- Hinges:
    - Reference: CE Mortise Hinge Grade 13.
    - Brand: D&D Hardware.
    - Quantity: 3 per door.
    - Dimensions: Ø14.2 x 101.6 mm.
    - Fixing: 8 screws (4 on the leaf, 4 on the frame).
    - Location: central part of each hinge placed at 200 and 1297 from the bottom of the door and at 240 mm from the top of the door.
    - See annex D for internal reinforcements.

- Door closer + arm (see DETAIL 7):
    - Reference: TS 71 EN 3/4 – 22212101 (door closer) + CL-N 22002301 (arm).
    - Brand: Dormakaba.
    - Quantity: 1 per door.
    - Fixation: door closer screwed to the leaf and frame.
    - Location:
        - Door A: exposed side.
        - Door C: unexposed side.
    - The door closer is activated for the test.



DETAIL 7

- Drop seal:
  - Reference: SEALz® Acoustic Door Drop Seal (SZCDS1MF).
  - Brand: Fire & Acoustic Solution Pte Ltd.
  - Quantity: 1 per door.
  - Location: on the bottom edge of each leaf.

Door B:

- Handle (see DETAIL 8, 9):
  - Reference: DDTP003.
  - Brand: D&D Hardware.
  - Quantity: 2.
  - Location: One on each side of the leaf.

- Cylinder with key (see DETAIL 8, 9):
  - Reference: DDLC004.
  - Brand: D&D Hardware.
  - Quantity: 1.
  - Location: Key on the unexposed side.

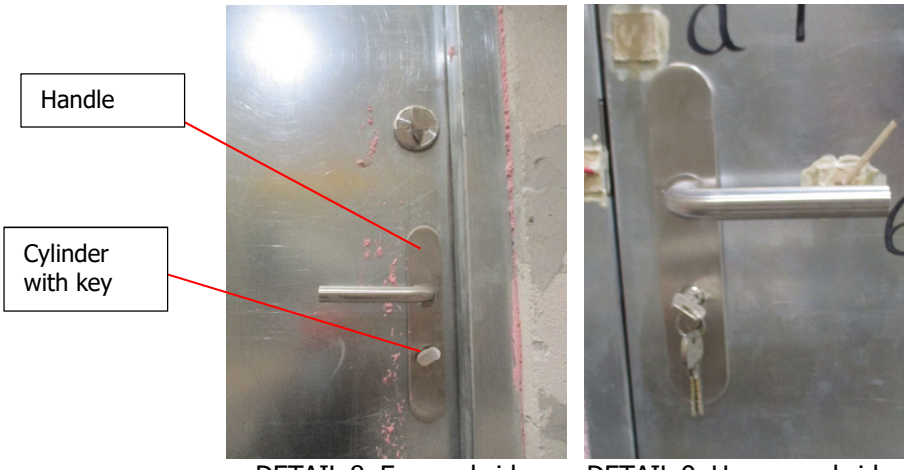

DETAIL 8. Exposed side

DETAIL 9. Unexposed side

- Lock:
  - Reference: DDML009.
  - Brand: D&D Hardware.
  - Quantity: 1.
  - Fixing: embedded on the lateral of the leaf with upper part of the latch bolt at 1115 mm from the bottom edge of the leaf.

- Thumb turn lock (see DETAIL 10, 11):
  - Reference: DDLK013.
  - Brand: D&D Hardware.
  - Quantity: 1.
  - Dimensions: Ø64.5 mm.
  - Location: Key on the unexposed side with centre of bolt placed at 1328 mm from the bottom of the door.



DETAIL 10. Unexposed side



DETAIL 11. Exposed side

- Hinges:
  - Reference: CE Mortise Hinge Grade 13.
  - Brand: D&D Hardware.
  - Quantity: 3 per door.
  - Dimensions: Ø14.2 x 101.6 mm.
  - Fixing: 8 screws (4 on the leaf, 4 on the frame).
  - Location: central part of each hinge placed at 200 and 1297 mm from the bottom of the door and 240 mm from the top of the door.
  - See annex D for internal reinforcements.

- Door closer (see DETAIL 12):
  - Reference: TS 71 EN 3/4 – 22212101 (door closer) + CL-N 22002301 (arm).
  - Brand: Dormakaba.
  - Quantity: 1.
  - Fixation: door closer screwed to the leaf and frame.
  - Location: Unexposed side.
  - Door closer deactivated for the test.



DETAIL 12

- Door viewer (see DETAIL 13):
  - Reference: DDDV004.
  - Brand:. D&D Hardware.
  - Dimensions: Ø36 mm.
  - Quantity: 1.
  - Location: At mid-width 1550 mm from the bottom of the door.


DETAIL 13

3.6 Supporting construction

- Type:
  - Low density rigid supporting construction (carried out by the Laboratory).
  - Standard.
- Total thickness: 150 mm.
- Density: 475-525 kg/m^3.
- Made of:
  - Type: cellular concrete blocks.

- Fixing method of the frame to the supporting construction:
  - Fixing:
    - Type: self-drilling screws.
    - Dimensions: Ø7 x 140 mm.
    - Quantity: 10 per door (see annex D):
      - 4 per jamb: at 100, 750, 1400 and 2500 mm from the top.
      - 2 on the lintel: at 100 mm from the jambs.

- Foam:
  - Type: Polyurethane foam.
  - Reference: Soudafoam FR Gun.
  - Brand: SOUDAL.
  - Location: In between frame and supporting construction.

Further details of the assembly method and installation of the samples tested can be consulted in Annex D: Technical specifications provided by the sponsor.

4. VERIFICATIONS PRIOR TO THE TEST

4.1 Mechanical conditioning (acc. to Annex A of EN 16034-2014).

4.1.1. Operability test (for hinged doors).

The samples to be tested are checked for operability, once mounted in the test frame and prior to being mounted in the furnace, by operating from fully closed to the maximum possible opening and at least 90º, and back to fully closed for 25 cycles.
The opening operation is carried out manually and the closing operation is performed by means of the self-closing device.

4.1.2. Self-closing test (for doors fitted without door coordination devices).

Because the doors incorporate self-closing devices, each leaf is opened to (10±2)º and held for 20 ±2s, released without shock and allowed to close. Both leaves do not exceed the maximum mean average speed of 300 mm/s.

4.2 Gaps:

Measurement of the gaps of each door (section 10.1.2 of the Standard EN 1634-1:2014+A1:2018).

Primary gaps:

Door A. Gaps measured before the test.		Minimum gap (mm)	Maximum gap (mm)	Average gap (mm)[1]
Between leaf and lintel	A	5.0	7.5	6.2
Between leaf and hinged side	A	3.0	3.5	3.3
Between leaf and lock side	A	3.5	4.0	3.8
Between leaf and floor	A	8.5	9.0	8.7

Door B. Gaps measured before the test.		Minimum gap (mm)	Maximum gap (mm)	Average gap (mm) [1]
Between leaf and lintel	A	4.5	7.0	5.7
Between leaf and hinged side	A	3.0	3.0	3.0
Between leaf and lock side	A	3.0	3.5	3.2
Between leaf and floor	A	5.5	7.0	6.2

Door C. Gaps measured before the test.		Minimum gap (mm)	Maximum gap (mm)	Average gap (mm) [1]
Between leaf and lintel	A	4.0	5.5	4.8
Between leaf and hinged side	A	4.5	5.0	4.7
Between leaf and lock side	A	3.0	4.0	3.5
Between leaf and floor	A	9.0	9.5	9.3

[1]The average value is obtained by taken into account 3 measurements.

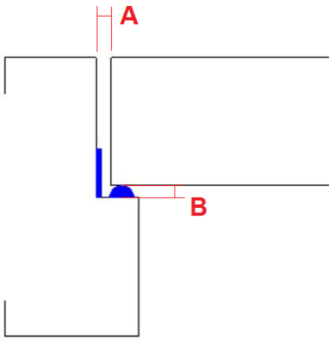

DETAIL 14. Door A-C

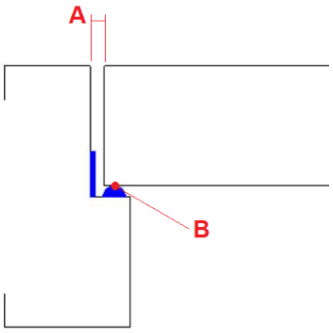

DETAIL 15. Door B

Secondary gaps:

Door A. Gaps measured before the test.		Minimum gap (mm)	Maximum gap (mm)	Average gap (mm) [1]
Between leaf and lintel	B	3.5	6.0	4.7
Between leaf and hinged side	B	6.5	7.0	6.7
Between leaf and lock side	B	3.0	3.5	3.2

Door B. Gaps measured before the test.		Minimum gap (mm)	Maximum gap (mm)	Average gap (mm) [1]
Between leaf and lintel	B[2]	0.0	0.5	0.3
Between leaf and hinged side	B[2]	0.0	0.5	0.2
Between leaf and lock side	B[2]	0.0	0.5	0.3

Door C. Gaps measured before the test.		Minimum gap (mm)	Maximum gap (mm)	Average gap (mm) [1]
Between leaf and lintel	B[2]	0.5	1.0	0.7
Between leaf and hinged side	B	5.0	5.5	5.2
Between leaf and lock side	B[2]	0.0	0.0	0.0

[1]The average value is obtained by taken into account 3 measurements.
[2]The gap does not taken into account the thickness of the joint.

4.3 **Closing force.**
Measurement of the closing force of each door (as indicated in section 10.1.3 of the Standard EN 1634-1:2014+A1:2018):

- Door A: 36.5 N.
- Door B: 46 N.
- Door C: 38 N.

4.4 **Final setting.**
The opening and closing of each door is verified (section 10.1.4 of the Standard EN 1634-1:2014+A1:2018).

4.5 **Door weight:**

- Weight of door A (frame included): 78 kg.
- Weight of door B (frame included): 80 kg.
- Wieght of door C (frame included): 77.8 kg.

4.6 The ambient temperature is checked at the beginning of the test, 14 ºC.

5. TEST PREPARATION

5.1 **Assembly of the samples:**
Samples are fixed in the supporting construction described in section 3.6 of this report, as indicated in figure 1. The wall is built inside a steel frame which, once mounted in the furnace, constitutes the vertical face of the furnace.
Door A opens inwards the furnace (hinges inside the furnace).
Door B opens outwards the furnace (hinges outside the furnace).
Door C opens outwards the furnace (hinges outside the furnace).

5.2 **Location of thermocouples:**

5.2.1. Average temperature (individual thermocouples) (see location in figure 2):

- Temperature of leaves:
  The average temperature of the unexposed side to fire of each door is measured by means of five thermocouples, one placed at the centre of each leaf and one at the centre of each quarter section:
  - Door A: 21, 22, 23, 24, 25.
  - Door B: 61, 62, 63, 64, 65.
  - Door C: 81, 82, 83, 84, 85.

These thermocouples are used to check the average and maximum temperature criteria.

5.2.2. Maximum temperature (auxiliary thermocouples) (see location in figure 2):

- Temperature of leaves:
  - At mid-height, 100 mm in from the visible part of the vertical edges:
    Door A: 26, 29.
    Door B: 66, 69.
    Door C: 86, 89.
  - 100 mm in from the visible part of the left vertical edge, 100 mm down from the visible part of the horizontal edge:
    Door A: 27, 28.
    Door B: 67, 68.
    Door C: 87, 88.
  - Additional thermocouple, at 100 mm from the viewer:
    Door B: 74.

These thermocouples are used to check the maximum temperature criterion.

5.2.3. Maximum temperature of the frame (see location in figure 2):

- At mid-height on each vertical member:
  Door A: 30, 33.
  Door B: 70, 73.
  Door C 90, 93:
- One the horizontal top member, 50 mm in from each corner of the frame at the point of leaf entry:
  Door A: 31, 32.
  Door B: 71, 72.
  Door C: 91, 92.

These thermocouples are used to check the maximum temperature criterion.

5.3 **Deflections:**
The deflections on each door are measured two different measuring points (see location in figure 2):
Door A: A1, A2.
Door B: A3, A4.
Door C: A6, A8.

6. OBTAINED RESULTS

6.1 Figure 3 shows the time/temperature curve of the furnace for this test and the Standard curve.

6.2 Figure 4 shows the deviation in percentage between the area under the standard curve and the area under the curve of the test, and comparing them this difference with the percentage tolerated by the Standard EN 1363-1:2020.

6.3 Figure 5 shows the internal pressure throughout the test and the limits stated in the Standard EN 1363-1:2020.

6.4 Figure 6 shows the average temperature of the individual thermocouples placed on the unexposed side to fire of door A.

6.5 Figure 7 shows the temperatures of the individual thermocouples placed on the unexposed side to fire of door A.

6.6 Figure 8 shows the temperatures of the auxiliary thermocouples placed on the unexposed side to fire of door A.

6.7 Figure 9 shows the temperatures of the thermocouples placed on the unexposed side to fire of the frame of door A.

6.8 Figure 10 shows the average temperature of the individual thermocouples placed on the unexposed side to fire of door B.

6.9 Figure 11 shows the temperatures of the individual thermocouples placed on the unexposed side to fire of door B.

6.10 Figure 12 shows the temperatures of the auxiliary thermocouples placed on the unexposed side to fire of door B.

6.11 Figure 13 shows the temperatures of the thermocouples placed on the unexposed side to fire of the frame of door B.

6.12 Figure 14 shows the average temperature of the individual thermocouples placed on the unexposed side to fire of door C.

6.13 Figure 15 shows the temperatures of the individual thermocouples placed on the unexposed side to fire of door C.
Note: Tp nº82, 84, 85 are disconnected at minute 56 (integrity failure at minute 53).

6.14 Figure 16 shows the temperatures of the auxiliary thermocouples placed on the unexposed side to fire of door C.

6.15 Figure 17 shows the temperatures of the thermocouples placed on the unexposed side to fire of the frame of door C.
Note: Tp nº91 is disconnected at minute 56 and thermocouples nº 92 and 93 at minute 66 (integrity failure at minute 53).

6.16 Figure 18 shows the deflections measured during the test on door A.
Note: deflection measurements on measuring point A2 does not records values from minute 46 of the test.

6.17 Figure 19 shows the deflections measured during the test on door B.

6.18 Figure 20 shows the deflections measured during the test on door C.

6.19 **Table of results:**

DOOR A:

	Failure minute	Reason
Integrity	41	Sustained flame in panic bar.
Thermal insulation	21	Thermocouple no. 28 records an increase in temperature greater than 180 ºC above the initial average temperature.

DOOR B:

	Failure minute	Reason
Integrity	133	Maintained throughout the test, 133 minutes.
Thermal insulation	23	Average temperature records an increase in temperature greater than 140ºC above the initial mean temperature.

DOOR C:

	Failure minute	Reason
Integrity	53	Sustained flame in upper left corner.
Thermal insulation	25	Average temperature records an increase in temperature greater than 140ºC above the initial mean temperature.

This test report details the method of construction, the test conditions and the results obtained when the specific element of construction described herein was tested following the procedure outlined in EN 1363-1, and where appropriate EN 1363-2. Any significant deviation with respect to size, constructional details, loads, stresses, edge or end conditions other than those allowed under the field of direct application in the relevant test method is not covered by this report.

Because of the nature of fire resistance testing and the consequent difficulty in quantifying the uncertainty of measurement of fire resistance, it is not possible to provide a stated degree of accuracy of the result.

7. FIELD OF APPLICATION

The field of direct application of the results obtained from the test is specified in the classification report.

The samples are classified in its corresponding classification report.

P.A.

Fire Resistance Testing Technician LGAI Technological Center, S.A.	Fire Laboratory Responsible LGAI Technological Center, S.A.

The results of the tests carried out refer only and exclusively to the sample tested, and in the moment and under the conditions indicated herein.

LGAI Technological Center, S.A. is not responsible for the information supplied by the sponsor.

Service Quality Guarantee

Applus+, guarantees that this task has been carried out following the exigencies of our Quality and Sustainability System, complying with the contractual conditions and legal regulation.

Within the framework of our improvement programme, we appreciate any comment you may deem appropriate, addressing them to the responsible who signs this document or to the Quality Director of Applus+, to the e-mail address: satisfaccion.cliente@applus.com

8. ANNEXES

A. REMARKS DURING THE TEST

B. PICTURES

C. FIGURES

D. TECHNICAL SPECIFICATIONS PROVIDED BY THE SPONSOR

A. REMARKS DURING THE TEST

Time (min)	SAMPLE 21/439-A	SAMPLE 21/439-B	SAMPLE 21/439-C
0	Ambient temperature: 14 ºC Test start time: 10:45 h		
17	Smoke is observed in door A, B and C.		
21	Tp, 28 records an increase in temperature greater than 180 ºC above the initial average temperature. Thermal insulation failure.		
23		Average temperature records an increase in temperature greater than 140ºC above the initial average temperature. Thermal insulation failure.	
24	Average temperature records an increase in temperature greater than 140ºC above the initial average temperature.		
25			Average temperature records an increase in temperature greater than 140ºC above the initial average temperature. Thermal insulation failure
41	Sustained flame in panic bar. Integrity failure.		
53			Sustained flame in upper left corner. Integrity failure.
74	Thermocouples are disconnected in door A, B, C.		
81		A gap is observed in zone A (see figure 2), Ø6 mm gap don't penetrate.	
133	End of test according specifications sponsor.		

B. PICTURES



PICTURE No. 1: General view of the unexposed side to fire of the doors before the test.



PICTURE No. 2: General view of the exposed side to fire of the doors before the test.





PICTURES No. 2, 3: Details of the hinges of the doors.



PICTURE No. 5: General view of the unexposed side to fire of the doors at the beginning of the test.



PICTURE No. 6: General view of the unexposed side to fire of the doors after 30 minutes of test.

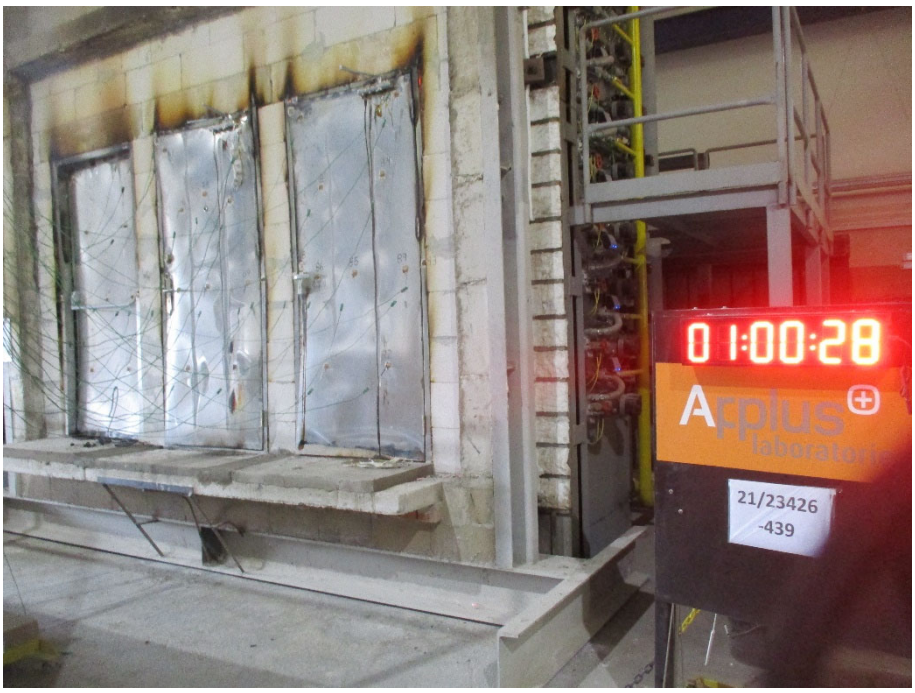

PICTURE No. 7: General view of the unexposed side to fire of the doors after 60 minutes of test.



PICTURE No. 8: General view of the unexposed side to fire of the doors after 120 minutes of test.



PICTURE No. 9: General view of the unexposed side to fire of the doors at the end of test, 133 minutest.

C. FIGURES

Figures: 1 to 20.

TEST SCHEMA

Unexposed side to fire

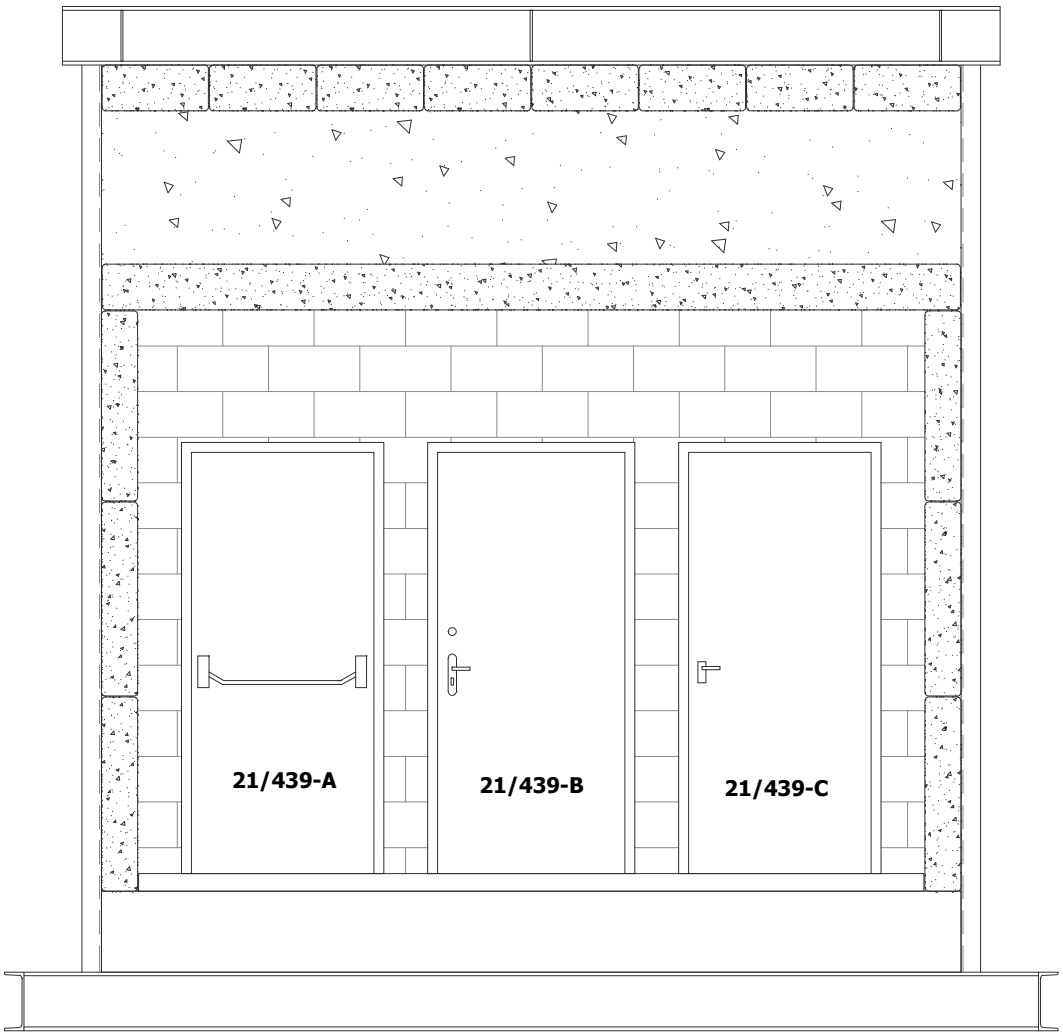

FIGURE 1

TEST SCHEMA, LOCATION OF THERMOCOUPLES AND DEFLECTION MEASURING POINTS

Unexposed side to fire

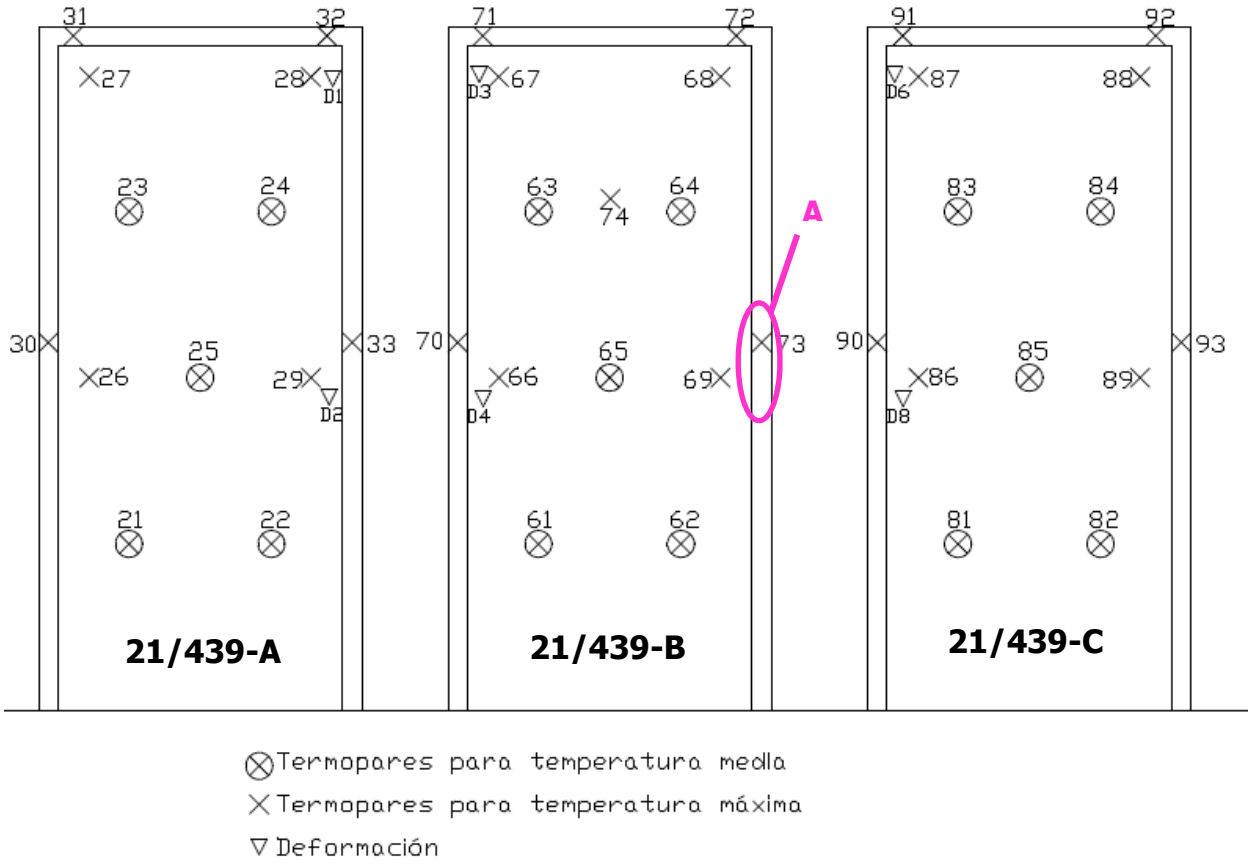

FIGURE 2

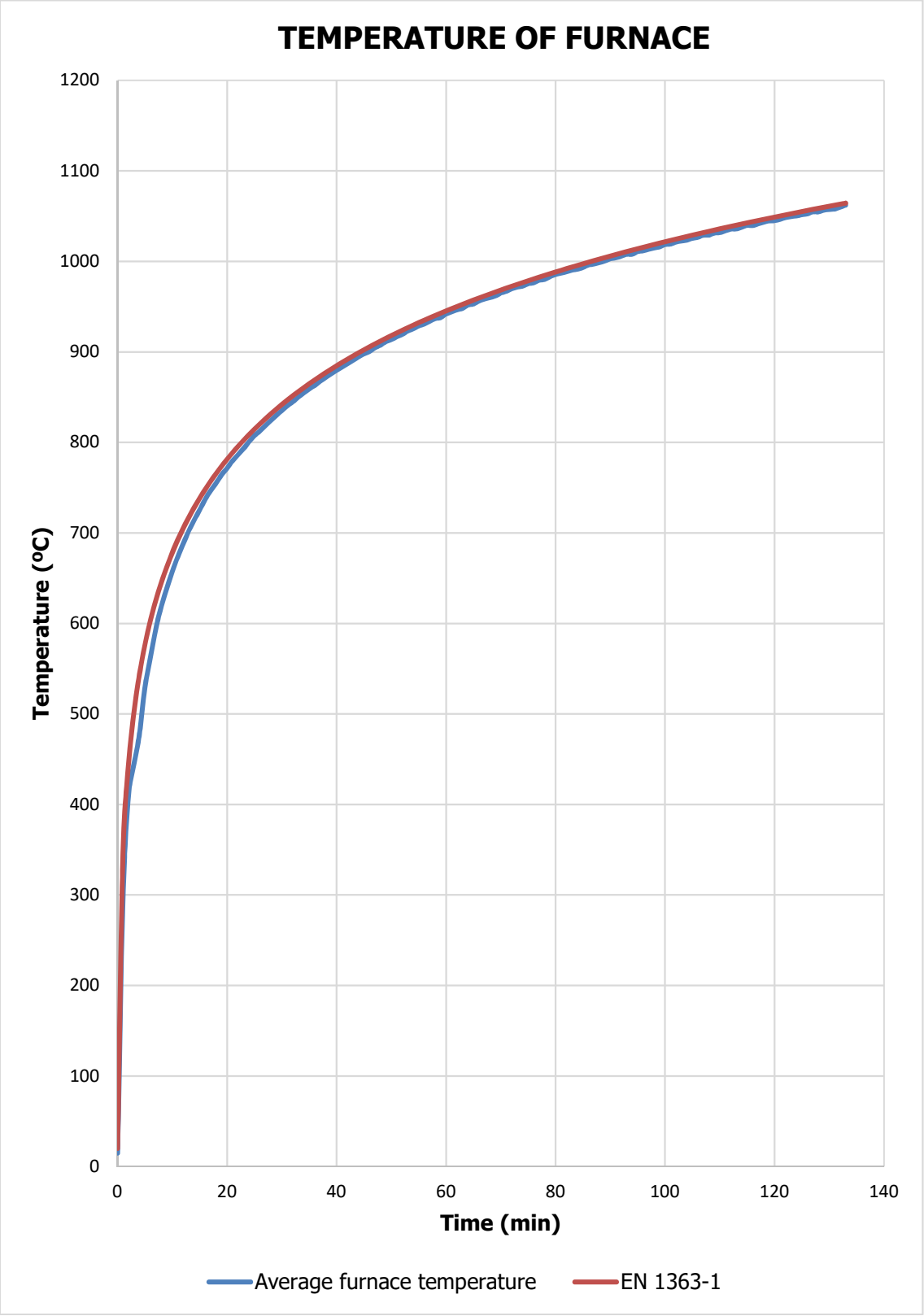
TEMPERATURE OF FURNACE
Temperature (ºC)
1200
1100
1000
900
800
700
600
500
400
300
200
100
0
0
20
40
60
80
100
120
140
Time (min)
Average furnace temperature
EN 1363-1

FIGURE 3

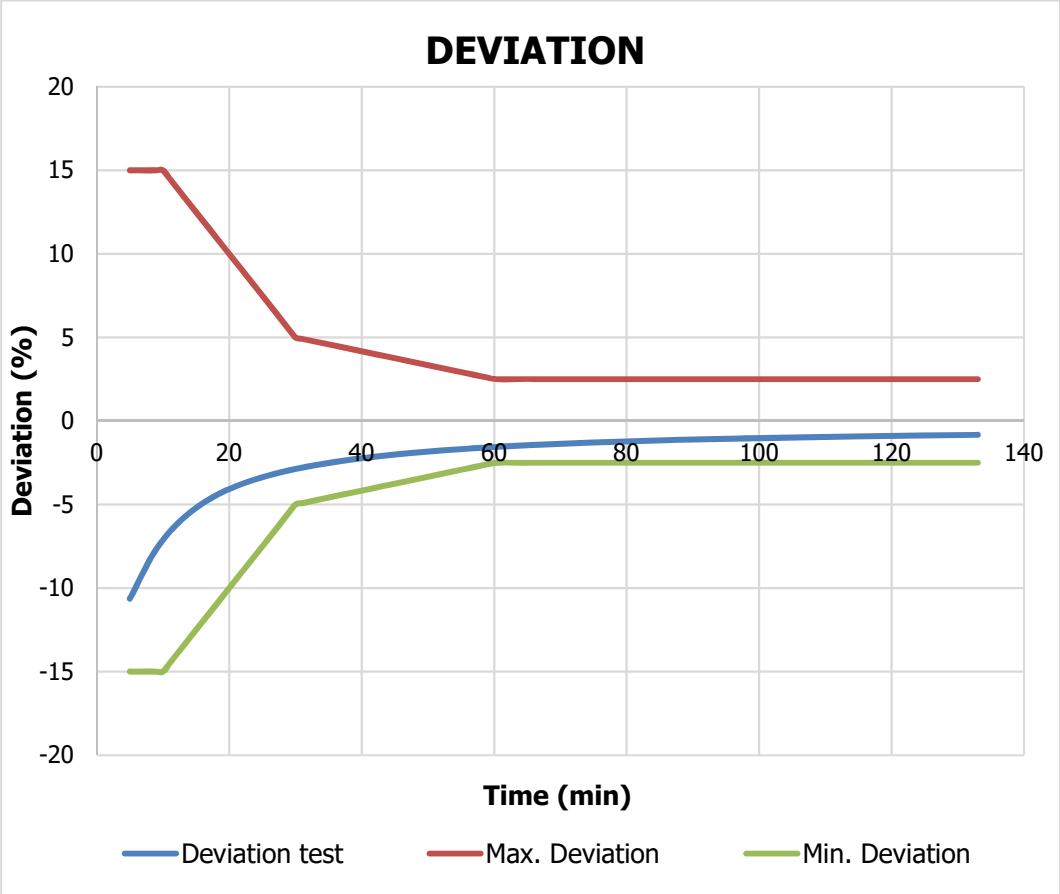

FIGURE 4

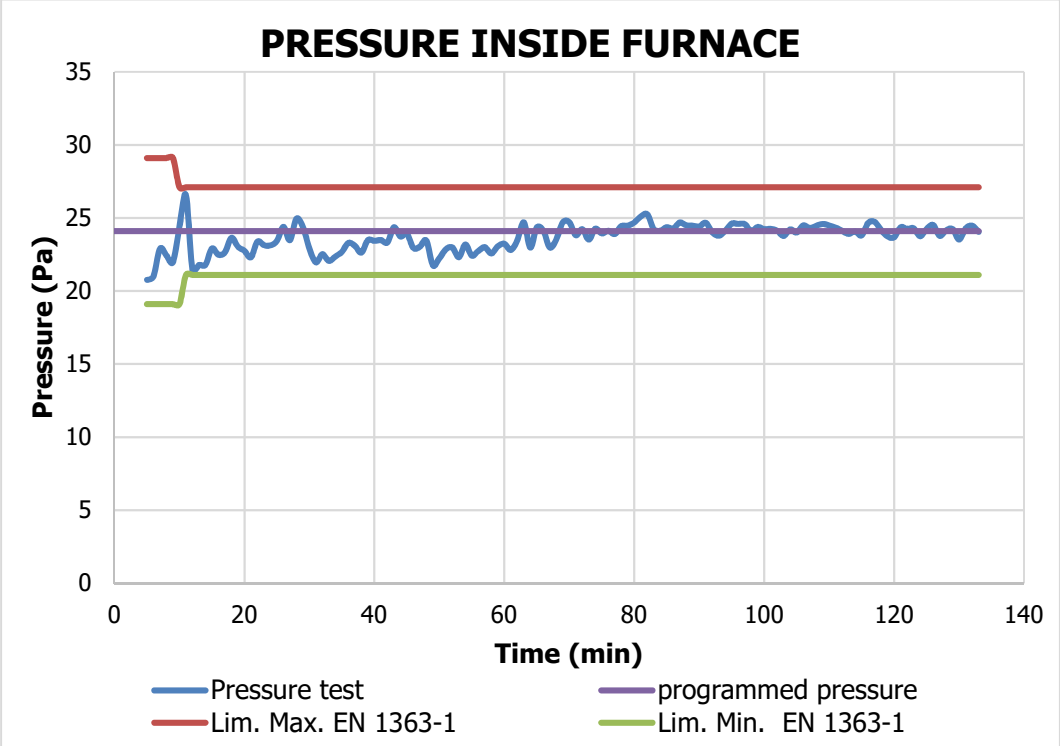

FIGURE 5

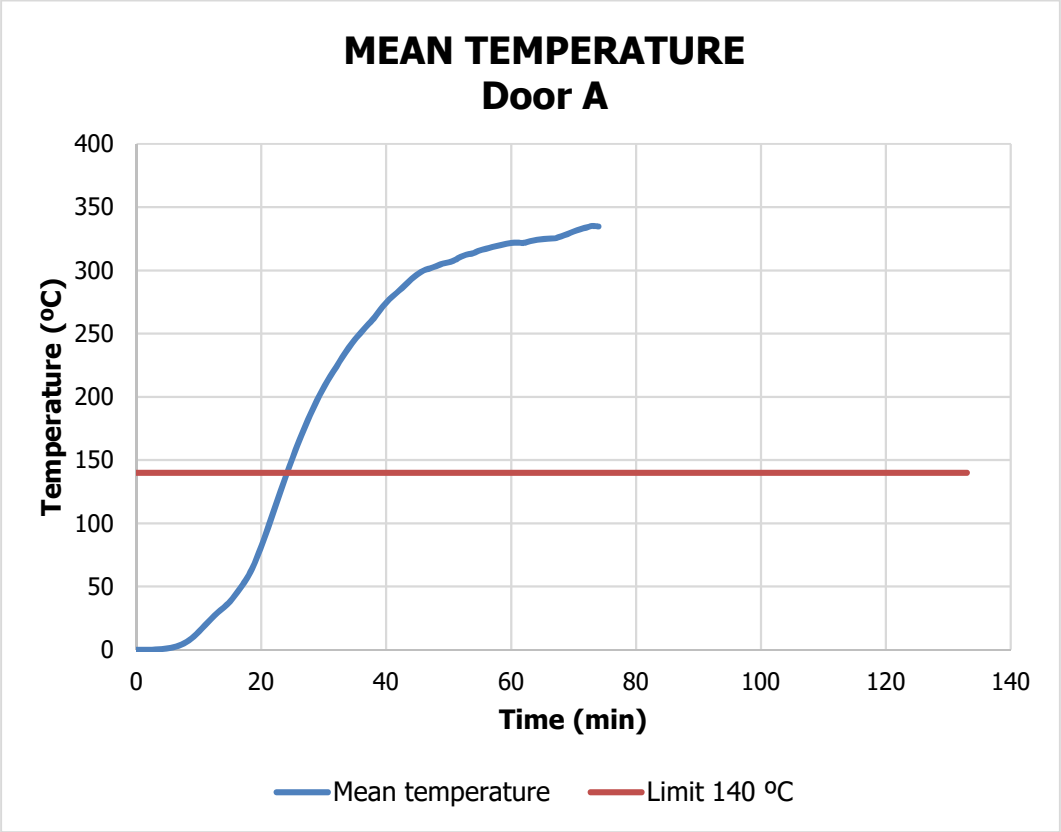

FIGURE 6

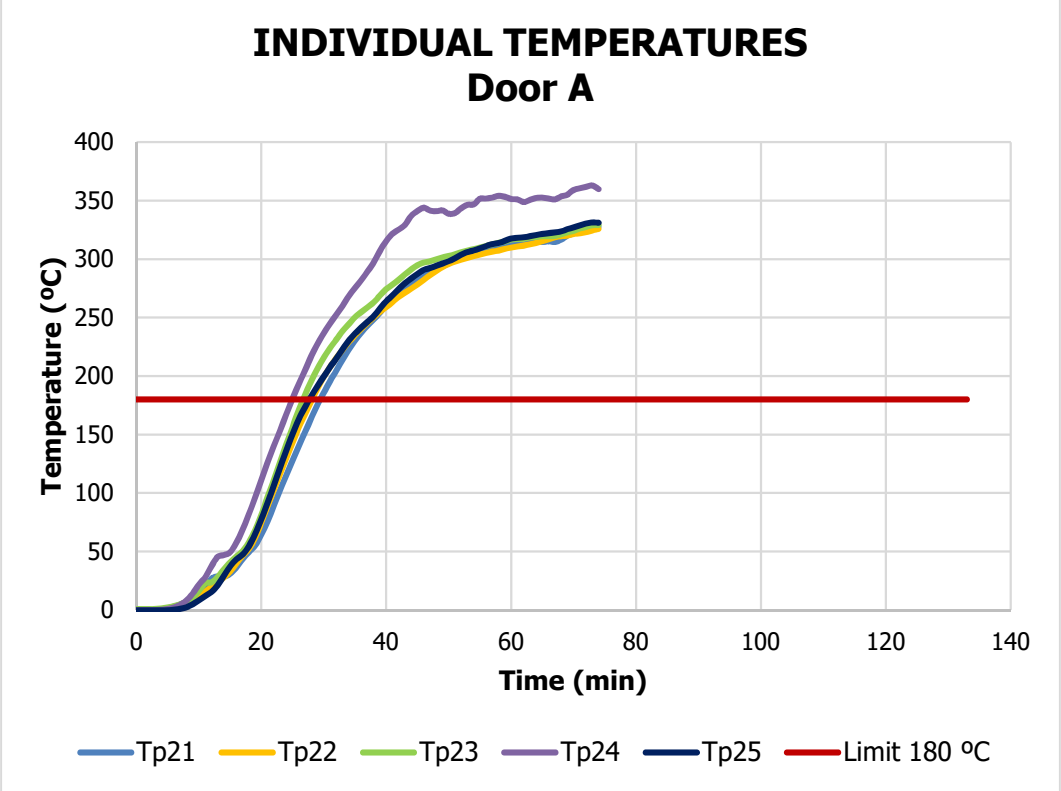

FIGURE 7

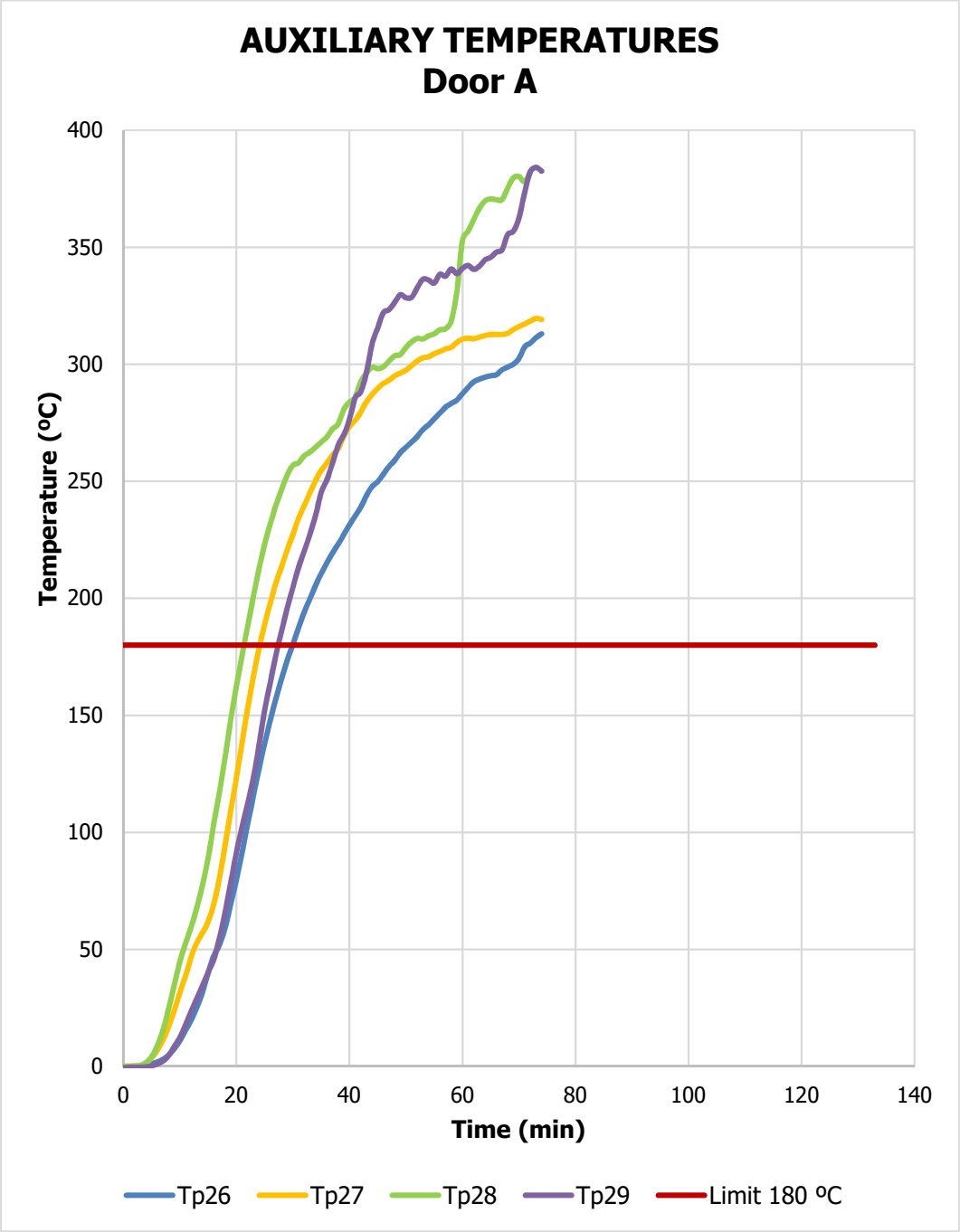
AUXILIARY TEMPERATURES
Door A
Temperature (ºC)
400
350
300
250
200
150
100
50
0
0
20
40
60
80
100
120
140
Time (min)
Tp26
Tp27
Tp28
Tp29
Limit 180 ºC

FIGURE 8

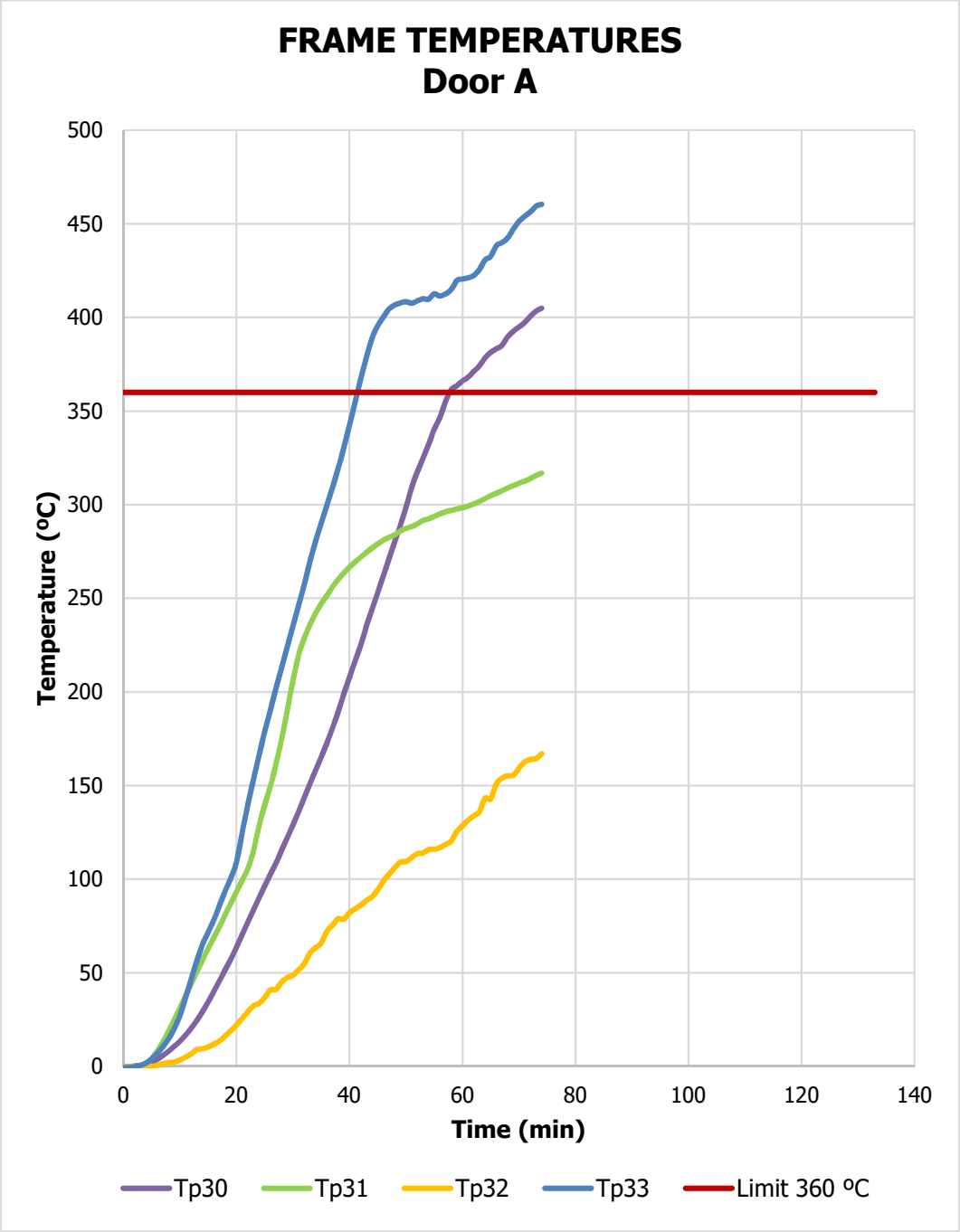
FRAME TEMPERATURES
Door A
Temperature (ºC)
500
450
400
350
300
250
200
150
100
50
0
0
20
40
60
80
100
120
140
Time (min)
Tp30
Tp31
Tp32
Tp33
Limit 360 ºC

FIGURE 9

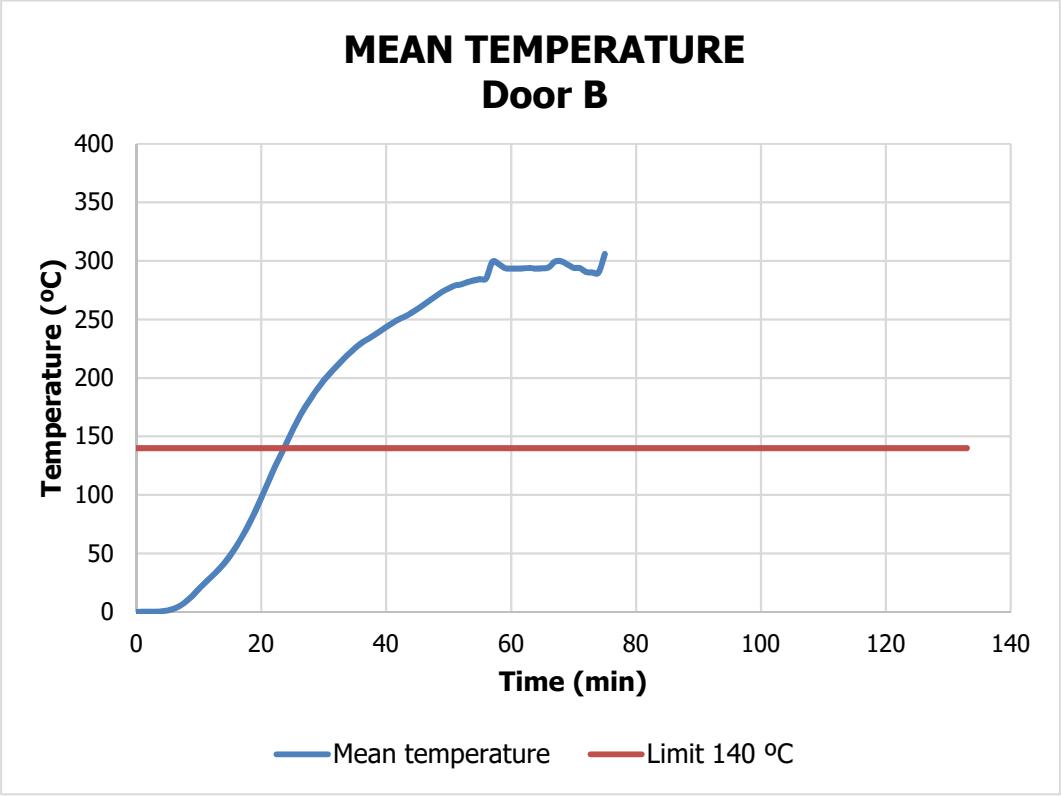

FIGURE 10

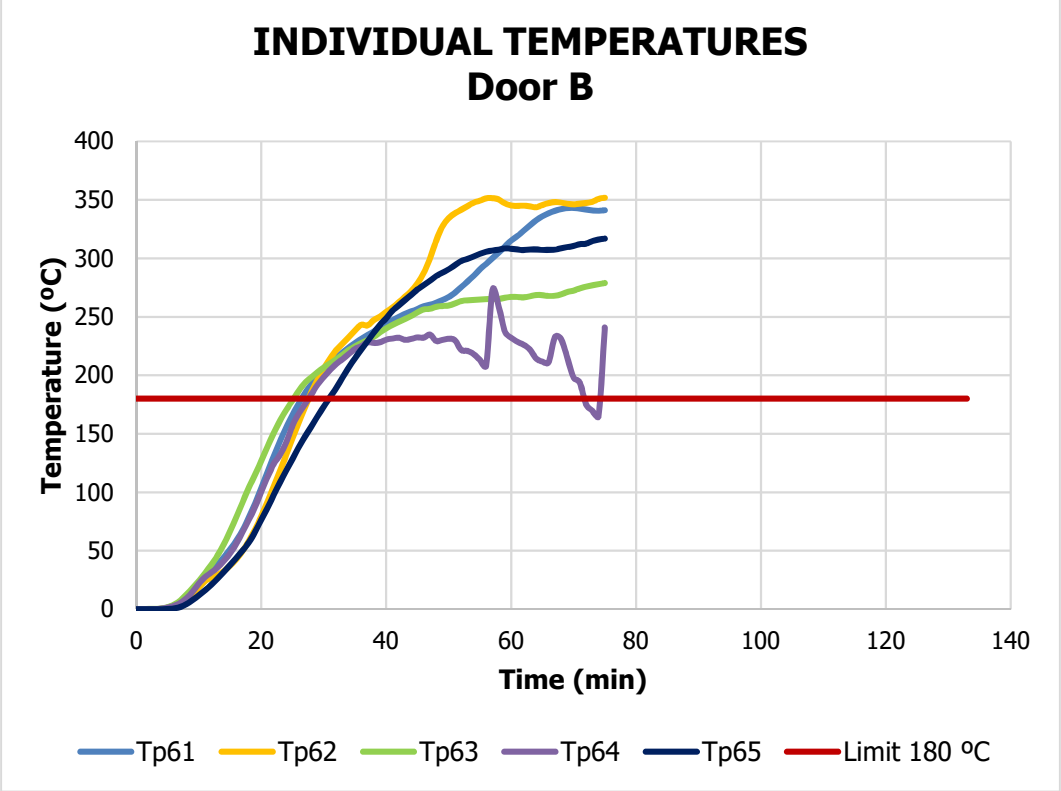

FIGURE 11

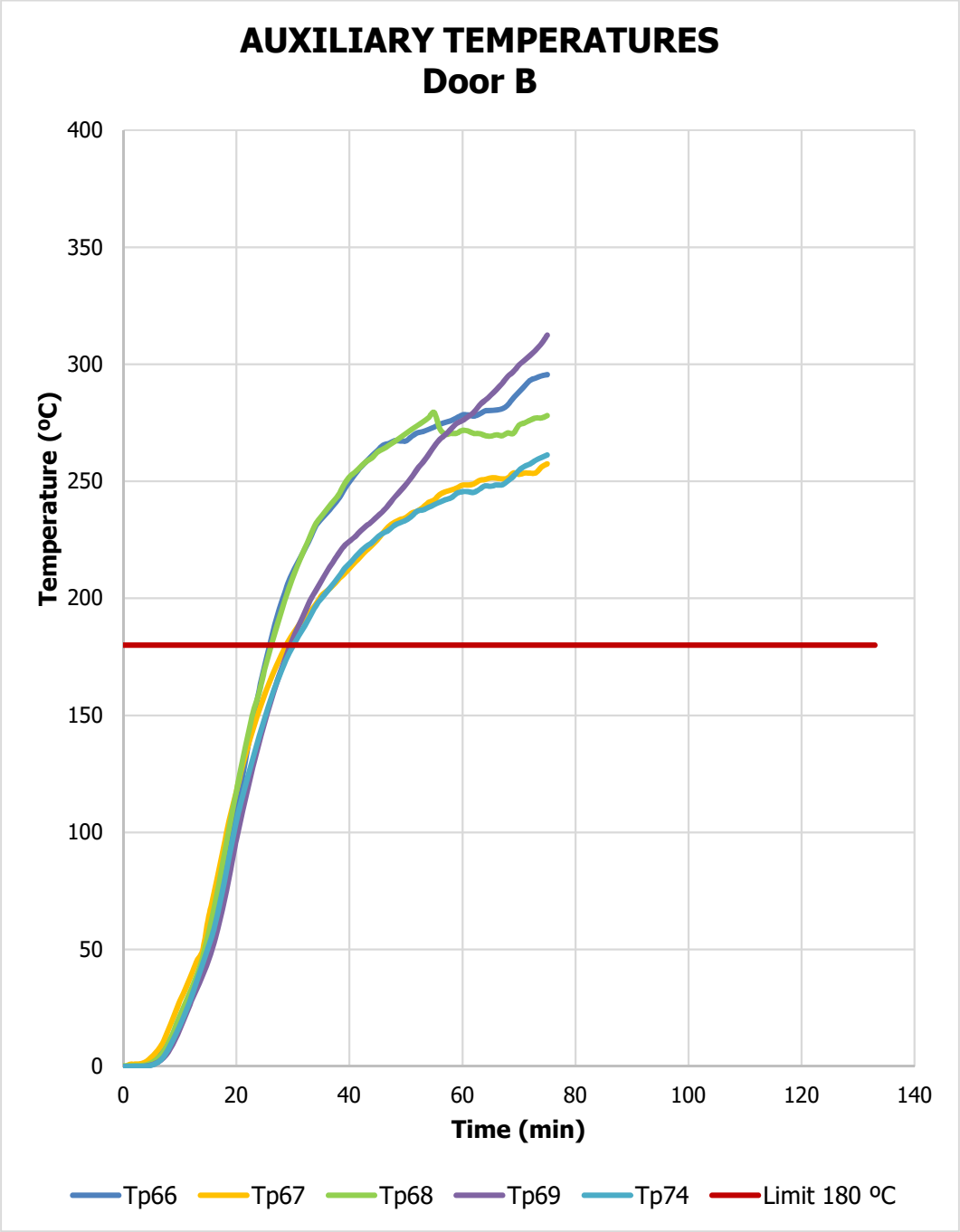
AUXILIARY TEMPERATURES
Door B
Temperature (ºC)
400
350
300
250
200
150
100
50
0
0
20
40
60
80
100
120
140
Time (min)
Tp66
Tp67
Tp68
Tp69
Tp74
Limit 180 ºC

FIGURE 12

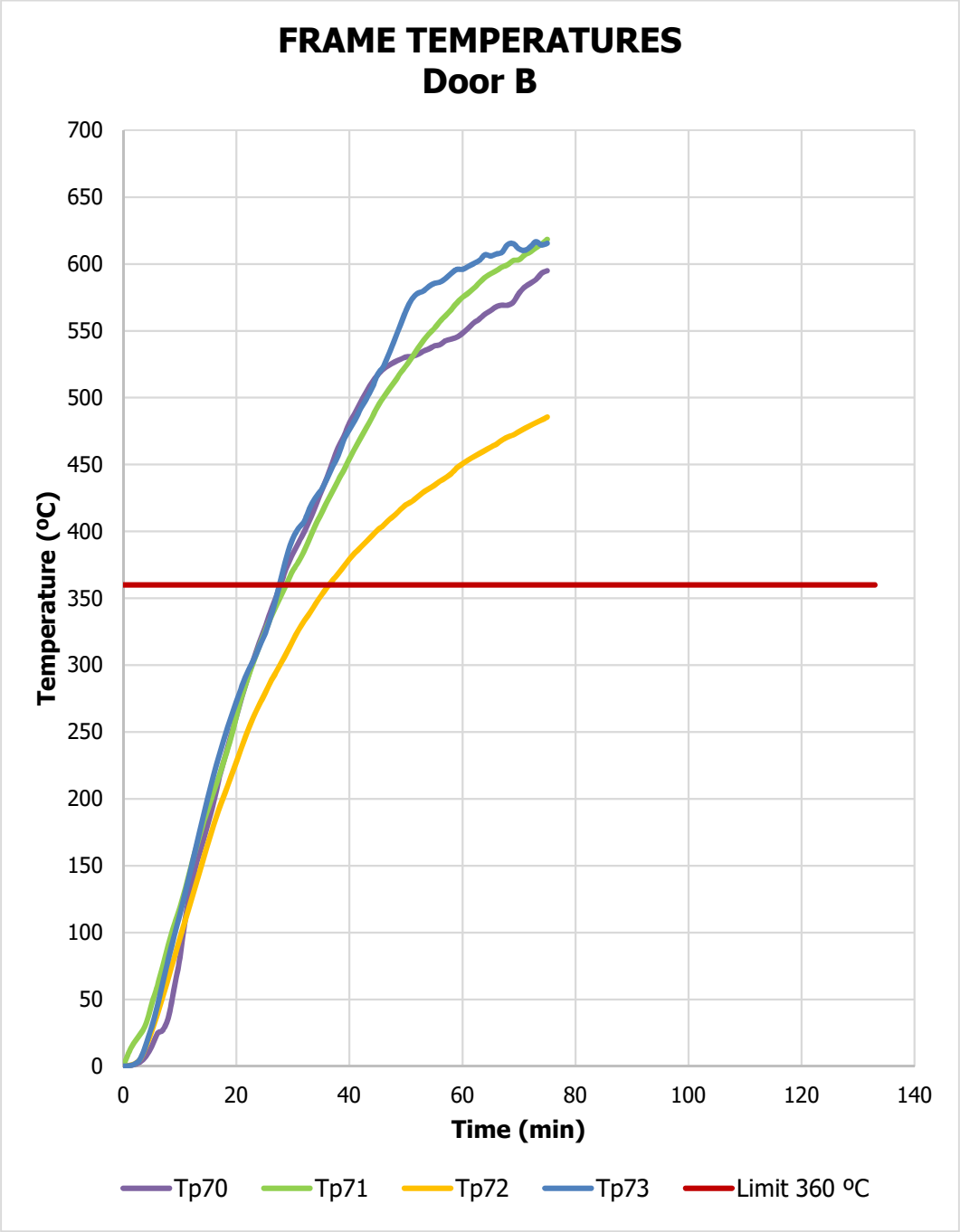
FRAME TEMPERATURES
Door B
Temperature (ºC)
700
650
600
550
500
450
400
350
300
250
200
150
100
50
0
0
20
40
60
80
100
120
140
Time (min)
Tp70
Tp71
Tp72
Tp73
Limit 360 ºC

FIGURE 13

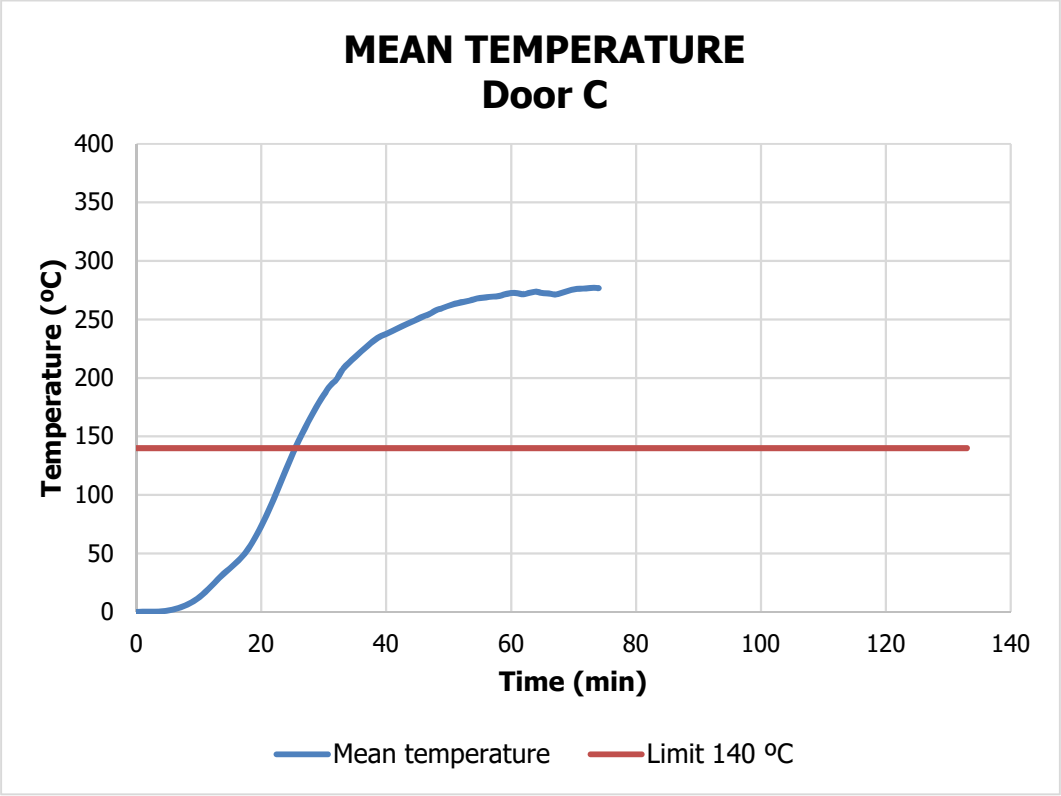

FIGURE 14

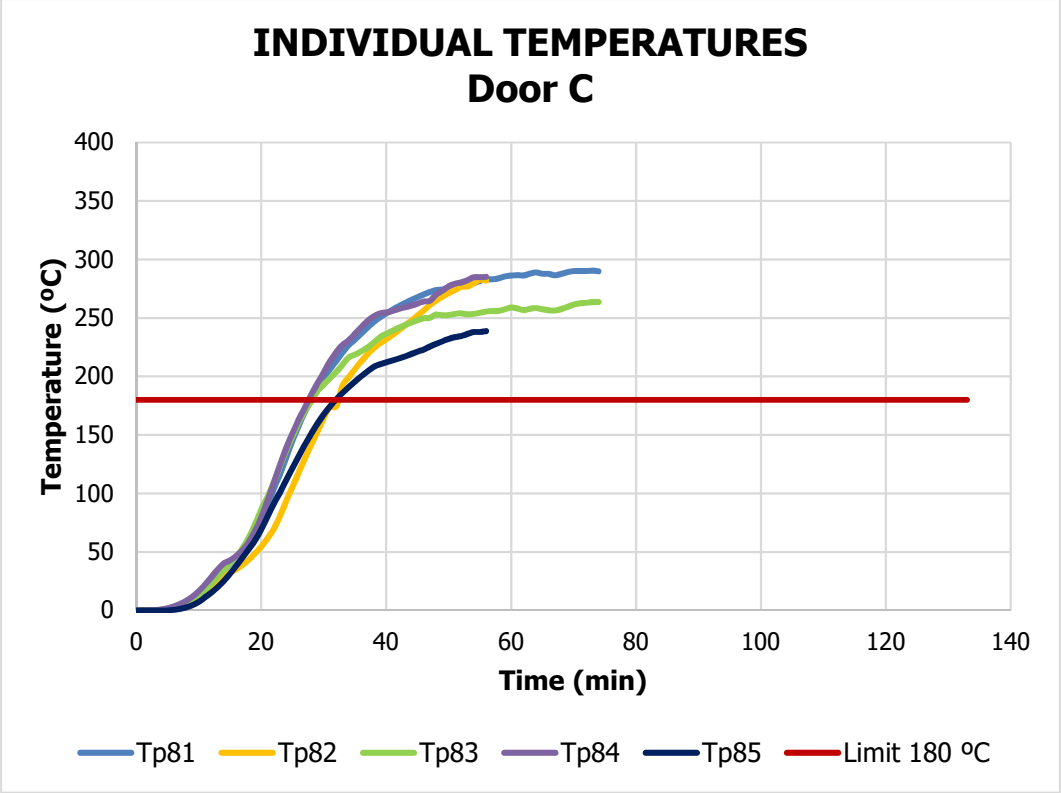

FIGURE 15

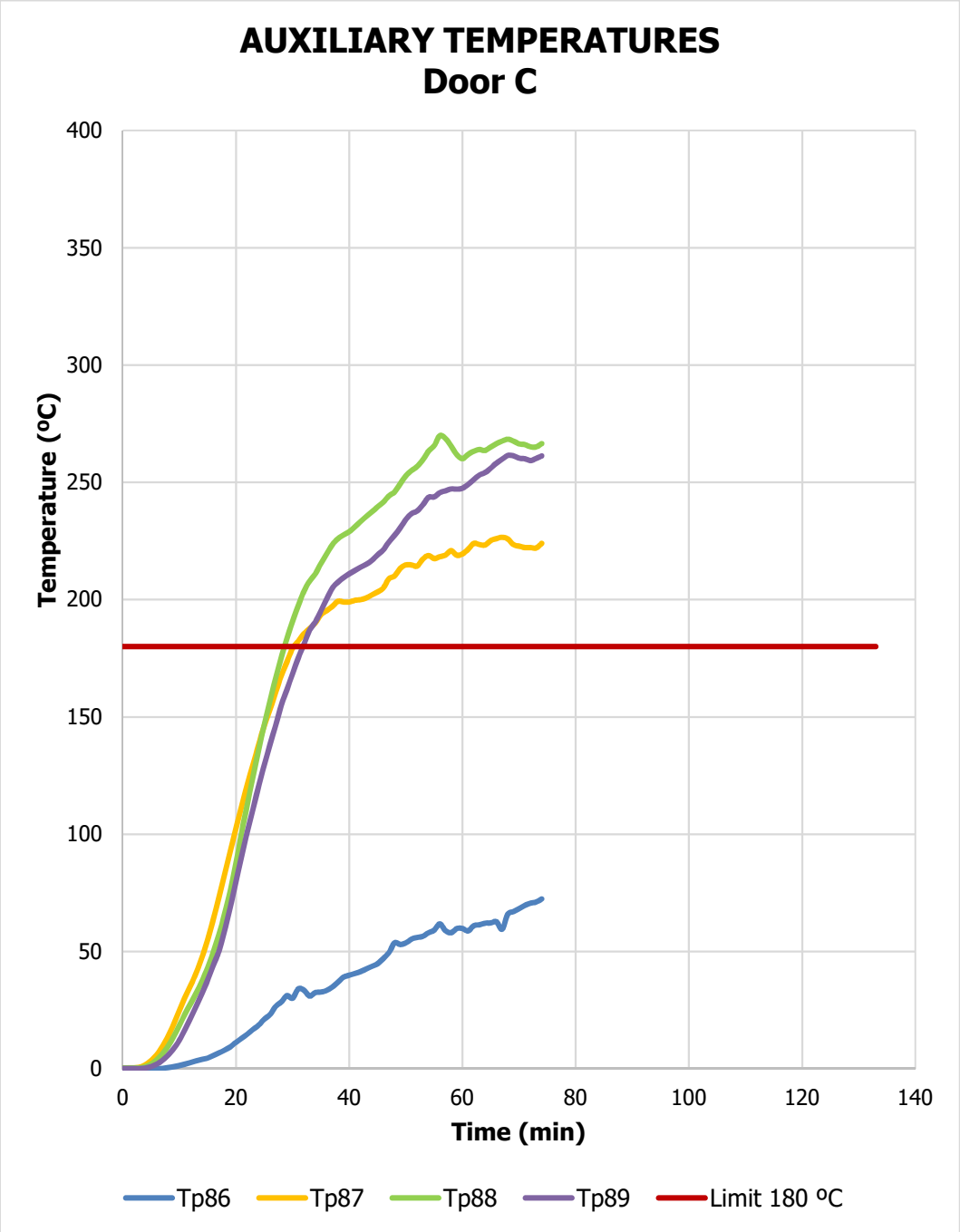
AUXILIARY TEMPERATURES
Door C
Temperature (ºC)
400
350
300
250
200
150
100
50
0
0
20
40
60
80
100
120
140
Time (min)
Tp86
Tp87
Tp88
Tp89
Limit 180 ºC

FIGURE 16

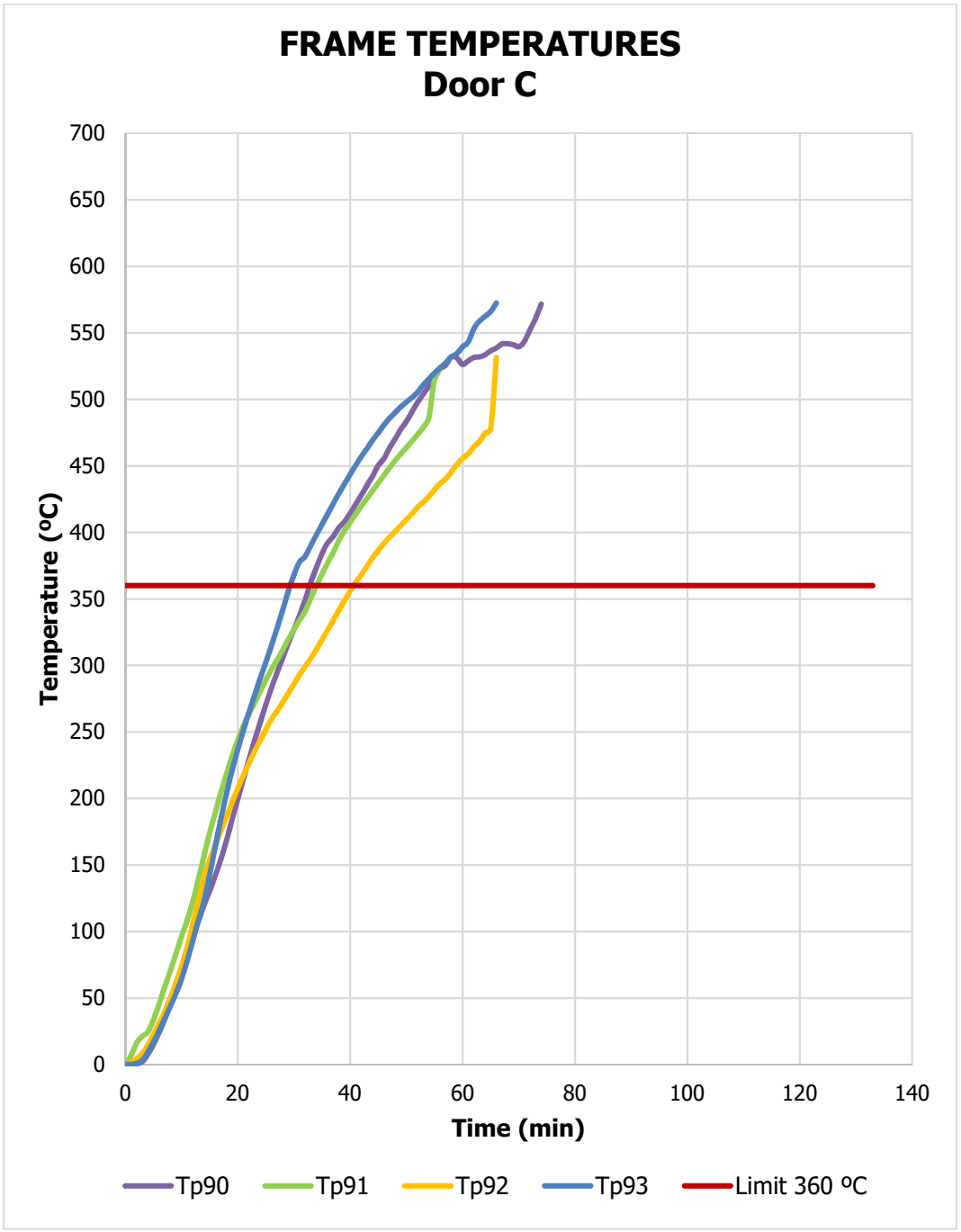
FRAME TEMPERATURES
Door C
Temperature (ºC)
700
650
600
550
500
450
400
350
300
250
200
150
100
50
0
0
20
40
60
80
100
120
140
Time (min)
Tp90
Tp91
Tp92
Tp93
Limit 360 ºC

FIGURE 17

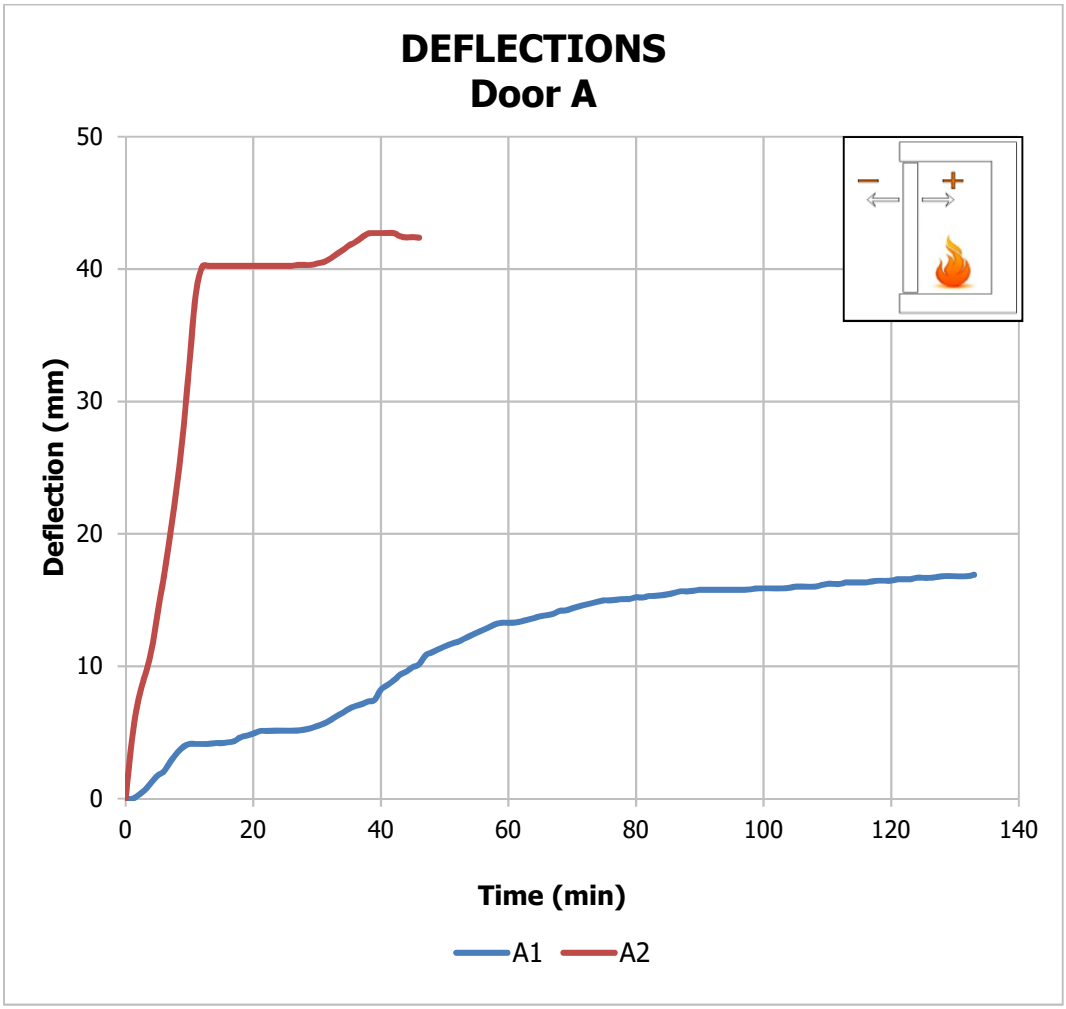
DEFLECTIONS
Door A
Deflection (mm)
50
40
30
20
10
0
0
20
40
60
80
100
120
140
Time (min)
A1
A2
−
+

FIGURE 18

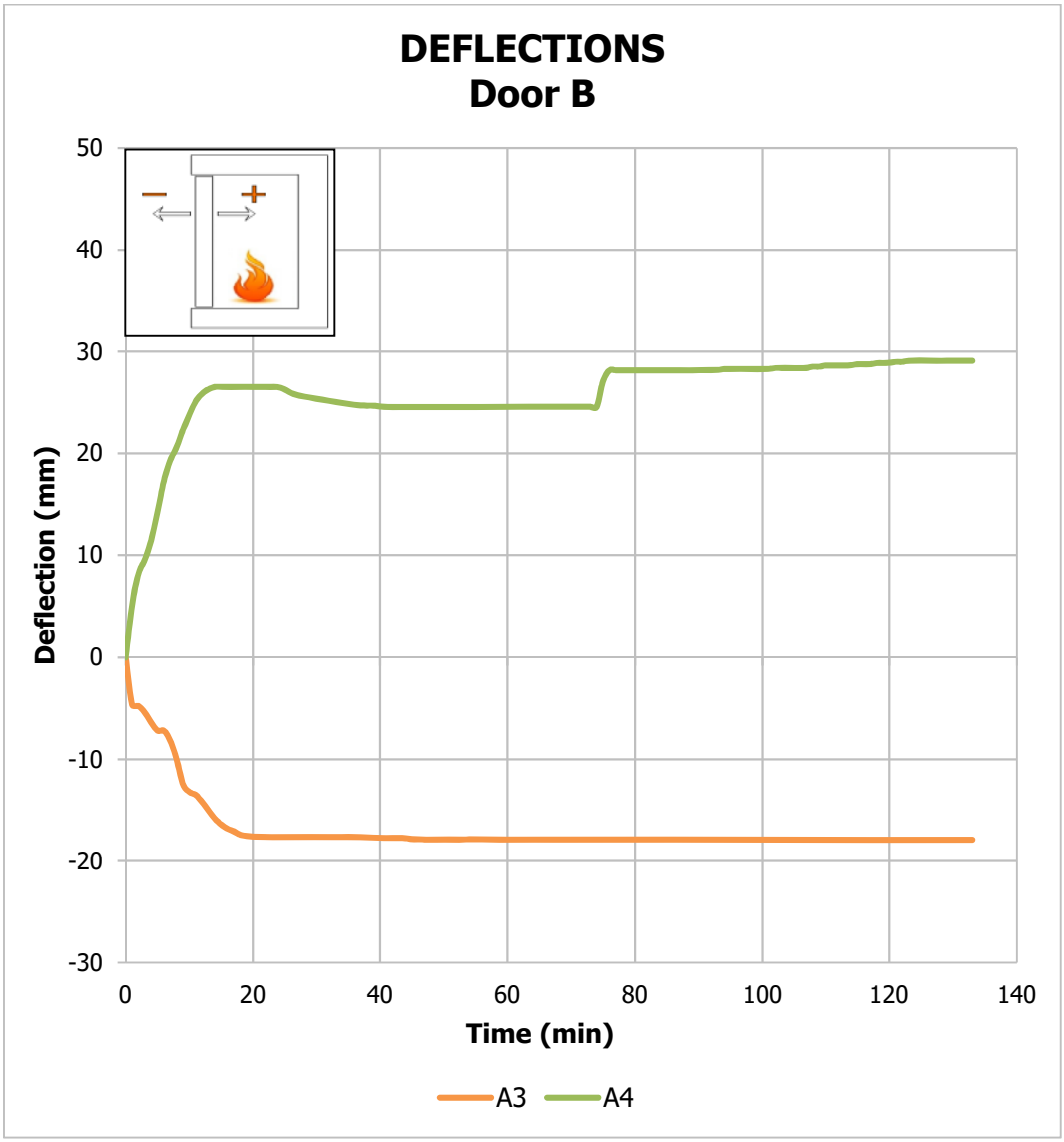
DEFLECTIONS
Door B
50
40
30
20
10
0
-10
-20
-30
Deflection (mm)
0
20
40
60
80
100
120
140
Time (min)
A3
A4

FIGURE 19

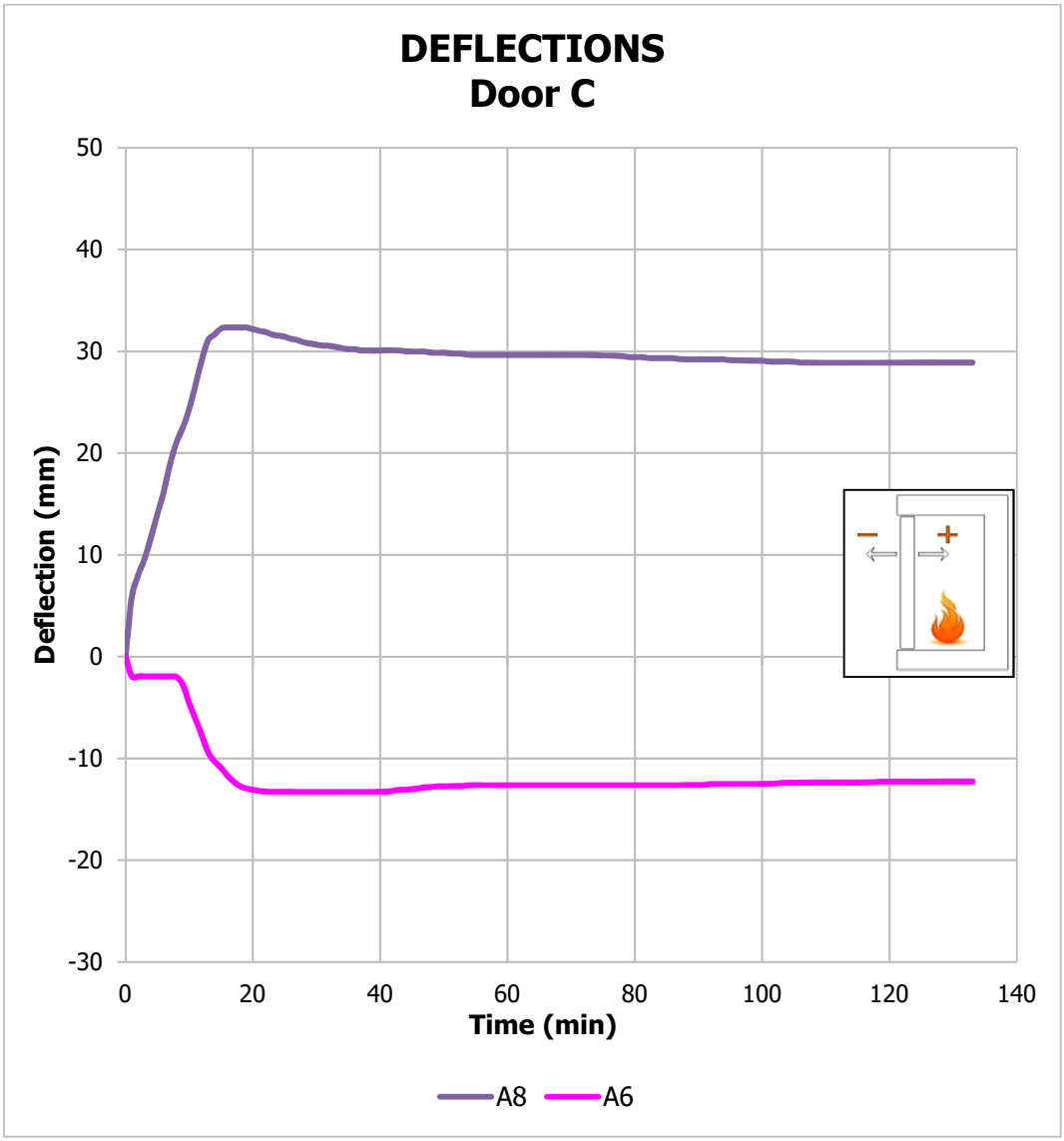
DEFLECTIONS
Door C
50
40
30
20
10
0
-10
-20
-30
Deflection (mm)
0
20
40
60
80
100
120
140
Time (min)
A8
A6

FIGURE 20

D. TECHNICAL SPECIFICATIONS PROVIDED BY THE SPONSOR

1. INFORMACIÓN PRINCIPAL / *Principal information*

Nº DE EXPEDIENTE: *File number:*	21/23426-439
NUEVA GAMA (ref.): *New range (ref.):*	*NA*
NUEVO ENSAYO (Si / No):	*Yes*
REPETICIÓN DE ENSAYO (Si / No) (Que expediente repite?) (Es igual a otra puerta pero en otro sentido de abertura?): *Test repeat (Yes / No)*	*NO*
TIPO DE PUERTA: *Type of door:*	*Steel Panic fire door, with rockwool insulation*
LADO DE EXPOSICIÓN: *Exposed face:*	*Both sides*
CLASIFICACIÓN OBJETIVO: *Target classification:*	*EI 120*

2. DATOS GENERALES / *General data*

Nº DE PUERTAS INSPECCIONADAS: *Nº of inspected doors:*	*2 pieces*
DIMENSIONES TOTALES DE LA PUERTA: *Total dimensions of the door:*	*ANCHURA (mm):* *Width (mm): 1000* *ALTURA (mm):* *Height (mm): 2200*
DIMENSIONES TOTALES DE LA HOJA ACTIVA: *Total dimensions of active leaf:*	*ANCHURA (mm):* *Width (mm):918* *ALTURA (mm):* *Height (mm): 2154*
DIMENSIONES TOTALES DE LA HOJA PASIVA: *Total dimensions of passive leaf:*	*ANCHURA (mm):* *Width (mm):* *ALTURA (mm):* *Height (mm):*
DIMENSIONES DE PASO LIBRE DE LA PUERTA: *Clear opening:*	*ANCHURA (mm):* *Width (mm): 847* *ALTURA (mm):* *Height (mm):2145*

3. DATOS DEL PRODUCTO / *Product data*

REFERENCIA COMERCIAL: *Comercial reference:*	*ELP-FPD-SL – Fire Panic door*
TIPO DE PUERTA (batiente, corredera, enrollable, etc): *Type of door:*	*Hinged*
MATERIAL PRINCIPAL (de hoja y marco): *Principal material (lead and frame):*	*Leaf – Galvanized metal sheet 1 mm thickness* *Rockwool 5cm thickness* *Expandable adhesive/glue* *Frame - Galvanized metal sheet 1.6 mm thickness* *Door hinges* *Push bar* *Handle* *Half-cylinder* *Door closer* *Intumescent seal* *Door gasket* *Drop-down seal*
NÚMERO DE HOJAS: *Number of leafs*	*SIMPLE* ☐ *DOBLE* ☐ *Single* *Double*
NÚMERO DE PANELES POR HOJA: *Number of panels per leaf*	
ANCHO DE PANELES: *Width of panels*	
PESO DE LA PUERTA (CON MARCO) (kg): *Weight of door (with frame) (Kg): 77kg (+- 2kg)*	*PESO DE LA HOJA (SIN MARCO) (kg):* *Weight of door (without frame) (Kg): 47 (+- 2kg)*

4. PRE-MARCO / *Pre-frame (The door does not have a pre-frame, the frame is directly attached to the constraction)*

FABRICANTE: *Manufacturer:*	*NA*
REFERENCIA: *Reference:*	*NA*
DIMENSIONES EXTERIORES (alto x ancho)(mm): *Outsied dimensions (height x width) (mm):*	*NA*
MATERIAL: *Material:*	*NA*
ESPESOR: *Thickness*	*NA*
MÉTODO DE FIJACIÓN DEL PRE-MARCO A OBRA:	*NA*

Method of fixing the pre-frame to construction:	
NÚMERO Y MATERIAL DE ANCLAJES DEL PRE-MARCO A OBRA Y DISTANCIA ENTRE ELLOS (mm). CROQUIS ACOTADO DEL TIPO DE FIJACIÓN: *Number and material of anchorages of the pre-frame to construction and distance between them (mm). fFxed skirt of the type of fixation:*	*NA*
CROQUIS DE LA SECCIÓN DEL PERFIL DEL PRE-MARCO (Lado activo, pasivo, superior e inferior): *Sketch of the pre-frame profile section (active, passive, superior and inferior side):*	*NA*
MÉTODO DE UNIÓN ENTRE PERFILES (Soldado, atornillado): *Method of union between profiles (soldier, bolted):*	*NA*
ACABADOS O REVESTIMIENTOS DEL PRE-MARCO: *Finishes or pre-frame coatings:*	*NA*

5. MARCO / *Frame*

FABRICANTE: *Manufacturer:*	*Ltd El+*
REFERENCIA: *Reference:*	*www.elplus.ge*
DIMENSIONES EXTERIORES (alto x ancho mm): *Outsied dimensions (height x width) (mm):*	*Height – 2220 mm* *Width – 1000 mm*
MATERIAL: *Material:*	*Galvanized metal sheet*
ESPESOR: *Thickness:*	*1.6 mm thickness*
MÉTODO DE FIJACIÓN DEL MARCO A PREMARCO/OBRA: *Method of fixing the frame to pre-frame or construction:*	1. *The frame is fixed into the opening using triangle wood pieces.*

	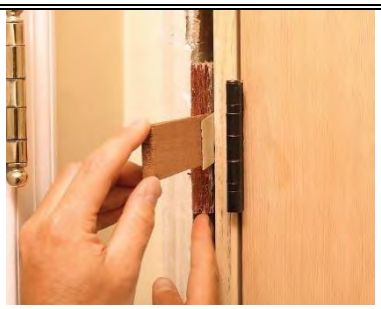 2. *We make sure that all the Jambs are as straight as possible with spirit tool.* 3. *We fill out the corners with fireproof foam for fixation and put long sticks in to the frame so that the foam does not couse the frame to change possition.* 4. *We wait for 8 hours until the foam is completely dry and remove the wooden sticks and triangle pieces that were there to make sure the frame stayed in its place.* 5. *Install the frame to the construction using Long screws*  6. *We fill rest of the space with the fireproof foam.*
NÚMERO Y MATERIAL DE ANCLAJES DEL MARCO A PREMARCO/OBRA Y DISTANCIA ENTRE ELLOS (mm). CROQUIS ACOTADO DEL TIPO DE FIJACIÓN: *Number and material of anchorages of the frame to pre-frame or construction and distance between them (mm). fFxed skirt of the type of fixation:*	*Totally 10 pieces of long metal screws or metal anchors.* *4 screws on right side* *4 screws on left side* *2 screws on top*
CROQUIS DE LA SECCIÓN DEL PERFIL DEL MARCO (Lado activo, pasivo, superior e inferior): *Sketch of the pre-frame profile section (active, passive, superior and inferior side):*	*NA – dont have pre-frame.*

MÉTODO DE UNIÓN ENTRE PERFILES (Soldado, atornillado): *Method of union between profiles (soldier, bolted):*	*Sides and top of the frame welded.*
ACABADOS O REVESTIMIENTOS DEL MARCO: *Finishes or frame coatings:*	*No coatings*

6. HOJAS / *Leafs*

INTERIOR HOJA / Inside leaf	
DETALLE GENERAL DE LA MUESTRA: *GENERAL DETAIL OF THE SAMPLE:*	*The door leaf is 52mm in thickness, insulated with rockwool. We use two long stiffening elements across the height of the door leaf. And 4 more for corners. – please check drawings for more information*
FABRICANTE: *Manufacturer:*	*Ravago*
MODELO: *Reference:*	*https://www.ravago.com/ - please check TDS for more information* *STONEWOOL BOARD* *Thermal insulation products for buildings - Factory made mineral wool (MW) products*
TIPO DE MATERIAL: *Type of material:*	*Rockwool*
ESPESOR (mm): *Thickness (mm):*	*50 mm*
DENSIDAD (kg/m³): *Density (kg/m³):*	*80 kg/m3*
MÉTODO DE FIJACIÓN: *Method of fixing:*	*Using adhesive – check below*
OBSERVACIONES: *Observations:*	The door leaf completly filled with the rockwool.
FABRICANTE: *Manufacturer:*	*Weiss Chemie*
MODELO: *Reference:*	*COSMO PU-160.260*
TIPO DE MATERIAL: *Type of material:*	*1 component Adhesive - COSMO PU-160.260*
ESPESOR (mm): *Thickness (mm):*	*NA*

DENSIDAD (kg/m³): *Density (kg/m³):*	*approx. 1.14 g/cm3*
MÉTODO DE FIJACIÓN: *Method of fixing:*	*NA*
OBSERVACIONES: *Observations:*	*NA*
FABRICANTE: *Manufacturer:*	*TATMETAL*
MODELO: *Reference:*	*http://www.tatmetal.com.tr/*
TIPO DE MATERIAL: *Type of material:*	*Galvanized metal sheet*
ESPESOR (mm): *Thickness (mm):*	*1mm*
DENSIDAD (kg/m³): *Density (kg/m³):*	*NA*
MÉTODO DE FIJACIÓN: *Method of fixing:*	*The adhesive used for 2 long stiffening elements and Welding for everything else.*
OBSERVACIONES: *Observations:*	
FABRICANTE: *Manufacturer:*	
MODELO: *Reference:*	
TIPO DE MATERIAL: *Type of material:*	
ESPESOR (mm): *Thickness (mm):*	
DENSIDAD (kg/m³): *Density (kg/m³):*	
MÉTODO DE FIJACIÓN: *Method of fixing:*	
OBSERVACIONES: *Observations:*	
REFUERZOS INTERIORES DE LA HOJA / Internal reinforcements of the leaf	
FABRICANTE: *Manufacturer:*	*Ltd EL+*
MODELO: *Reference:*	
TIPO DE MATERIAL: *Type of material:*	*2 of reinforcements along the door length -* *Galvanized sheet – 1mm thickness*
ESPESOR (mm): *Thickness:*	

DENSIDAD (kg/m³): *Density:*	
MÉTODO DE FIJACIÓN: *Method of fixing:*	*Using adhesive*
DETALLE: *Details and observations:*	
FABRICANTE: *Manufacturer:*	*Ltd EL +*
MODELO: *Reference:*	
TIPO DE MATERIAL: *Type of material:*	*4 reinforcements in the corners –* *Galvanized sheet – 1.6 mm thickness*
ESPESOR (mm): *Thickness:*	
DENSIDAD (kg/m³): *Density:*	
MÉTODO DE FIJACIÓN: *Method of fixing:*	*Welding*
DETALLE: *Details and observations:*	
SISTEMA DE UNIÓN ENTRE AISLAMIENTOS / Union system between isolations	
FABRICANTE: *Manufacturer:*	*Weiss-chemie*
REFERENCIA: *Reference:*	*COSMO PU-160.260*
TIPO (cola, grapas,...): *Type (glue, staple,...):*	*Glue*
LUGAR: *Place:*	*The glue used on top of the rockwool as well as on the bottom.*
FABRICANTE: *Manufacturer:*	
REFERENCIA: *Reference:*	
TIPO (cola, grapas,...): *Type (glue, staple,...):*	
LUGAR: *Place:*	

SISTEMA DE UNIÓN ENTRE CHAPAS / Union system between sheets	
TIPO Y PIEZA (soldado, perfilado, atornillado...): *Type (welded, profiled, screwed):*	*Welding*
LUGAR: *Place:*	Dots all arround the door leaf.
DISTANCIA ENTRE ELLOS: *Distance between them:*	10-12 cm on top and bottom 20-22 cm on the sides
TIPO Y PIEZA (soldado, perfilado, atornillado...): *Type (welded, profiled, screwed):*	*NA*
LUGAR: *Place:*	*NA*
DISTANCIA ENTRE ELLOS: *Distance between them:*	*NA*
ACABADOS O REVESTIMIENTOS DE LA HOJA – ***Any finish or coating are not used. Just the galvanized sheet***	
FABRICANTE: *Manufacturer:*	*NA*
REFERENCIA: *Reference:*	*NA*
TIPO: *Type:*	*NA*
LUGAR (ambas caras): *Paced (both faces):*	*NA*
ESPESOR (mm): *Thickness 8mm):*	*NA*
SISTEMA DE FIJACIÓN A HOJA: *Leaf fixing system:*	*NA*
TAPAJUNTAS / Joint coverings - none	
MATERIAL: *Material:*	*NA*
POSICIÓN EN LA HOJA: *Leaf position:*	*NA*
DIMENSIONES DEL PERFIL: *Dimensions of profil·les:*	*NA*
DETALLE: *Details:*	*NA*

7. PRODUCTOS INTUMESCENTES DE LAS JUNTAS Y OTROS
Joints Intumescent products and others

FABRICANTE: *Manufacturer:*	*Pyroplex*
REFERENCIA: *Reference:*	*Intumescent Strip – Fire only - Certifire CF355*
DIMENSIONES: *Dimensions:*	*ANCHURA (mm):* *Width (mm): 20mm* *ESPESOR (mm):* *Thickness (mm):2mm*
DISTRIBUCIÓN DE LA JUNTA EN LA HOJA: *Leaf position:*	*NA*
DISTRIBUCIÓN DE LA JUNTA EN EL MARCO: *Frame position:*	*Intumescent seal is located around the frame. Please check drawings for position details.*
FABRICANTE: *Manufacturer:*	SANOK RUBBER COMPANY S.A.
REFERENCIA: *Reference:*	*RUBBER COMPOUND 6EP3001 (FC-30)*
DIMENSIONES: *Dimensions:*	*ANCHURA (mm):* *Width (mm): 9mm* *ESPESOR (mm):* *Thickness (mm):7.5mm*
DISTRIBUCIÓN DE LA JUNTA EN LA HOJA: *Leaf position:*	
DISTRIBUCIÓN DE LA JUNTA EN EL MARCO: *Frame position:*	*Smoke and voice seal is located around the frame. Please check drawings for position details.*
FABRICANTE: *Manufacturer:*	
REFERENCIA: *Reference:*	
DIMENSIONES: *Dimensions:*	*ANCHURA (mm):* *Width (mm):* *ESPESOR (mm):* *Thickness (mm):*
DISTRIBUCIÓN DE LA JUNTA EN LA HOJA: *Leaf position:*	
DISTRIBUCIÓN DE LA JUNTA EN EL MARCO: *Frame position:*	

8. HERRAJES / *Hardware*

CERRADURA / Lock	
FABRICANTE: *Manufacturer:*	*Dormakaba – DORMA DEUTSCHLAND GmbH*
REFERENCIA: *Reference:*	*DORMA PHA 2000 series Panic Exit Devices with steel latch*
MATERIAL INTUMESCENTE (Marca, Referencia y ubicación en la muestra): *Instumencent material cover:*	*NA*
PORTACERRADURAS: *Lock profile fixation:*	*Outside rim device.*
INDICAR POSICIÓN DE LA CERRADURA EN LA PUERTA ***The position will be indicated in the attached drawing*** *A:* *B:* *C:* *D:* *E:* *F:* *G:* 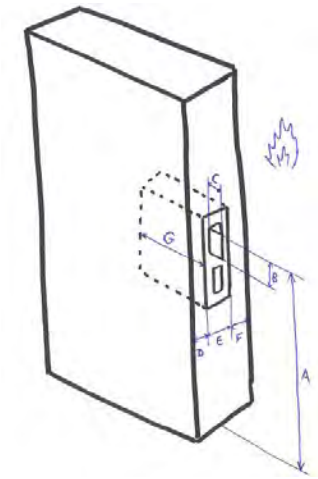 *En caso de llevar cierre arriba/abajo incluir la misma información*	
CONTRA-CERRADURA / Opposite lock	
FABRICANTE: *Manufacturer:*	*Dormakaba* *https://www.dormakaba.com/en*
REFERENCIA: *Reference:*	*DORMA PHA 2000 series Panic Exit Devices with steel latch*
FALLEBAS: *Profiles:*	*NA*
CIERRAPUERTAS / Door closer	
FABRICANTE: *Manufacturer*	*Dormakaba* *https://www.dormakaba.com/en*

REFERENCIA: *Reference:*	*22212101 TS 71 EN 3/4* *DOOR CLOSER BODY SILVER* *22002301 TS 71/* *STANDARD SCISSOR ARM SILVER*
POSICIÓN DEL CIERRAPUERTAS: *Position of the door closer:*	*According to the door closer instructions* *CARA BISAGRAS / Hinged face:* *CARA NO BISAGRAS / Opposite hinged face:* *EMBUTIDO / Internal:* *SOBRE LA HOJA / On the leaf:* *SOBRE EL MARCO / On the frame:*
SELECTOR DE CIERRE / Door coordinator - none	
FABRICANTE: *Manufacturer:*	*NA*
REFERENCIA: *Reference:*	*NA*
POSICIÓN DEL SEELECTOR DE CIERRE: *Position of the closing selector:*	*CARA BISAGRAS / Hinged face:* *CARA NO BISAGRAS / Opposite hinged face:* *EMBUTIDO / Internal:* *SOBRE LA HOJA / On the leaf:* *SOBRE EL MARCO / On the frame:*
MANILLA / POMO Handle / Knob	
UNIDADES: *Units:*	*1 handle*
FABRICANTE: *Manufacturer:*	*Dormakaba*
REFERENCIA: *Reference:*	*3501439011001 PHT 01* *EXTERNAL FITTING SILVER*
TIPO Y MATERIAL: *Type and material:*	*Outside handle, with halfcylinder. Steel*
SITUACIÓN: *Placed:*	*The position will be indicated in the attached drawing*
UNIDADES: *Units:*	
FABRICANTE: *Manufacturer:*	
REFERENCIA: *Reference:*	
TIPO Y MATERIAL: *Type and material:*	
SITUACIÓN: *Placed:*	
BARRA ANTIPÁNICO / Anti-panic device	
UNIDADES: *Units:*	*1*
FABRICANTE: *Manufacturer:*	*Dormakaba*
REFERENCIA: *Reference:*	*3501421011001 PHA 2101* *PANIC DEVICE SILVER* *3501421050001 PHA 2105*

	CONNECTING ROD 1130 mm. SILVER
TIPO Y MATERIAL: *Type and material:*	*Outside operated panic exit device. Steel*
UNIDADES: *Units:*	
FABRICANTE: *Manufacturer:*	
REFERENCIA: *Reference:*	
TIPO Y MATERIAL: *Type and material:*	
BOMBÍN (en caso de ser independiente) / Cilynder	
FABRICANTE: *Manufacturer:*	*Dormakaba*
REFERENCIA: *Reference:*	*AP1000 CYLINDER*
BISAGRAS / Hinges	
TIPO DE BISAGRA: *Hinges:*	*ball bearing hinges*
UNIDADES: *Units:*	*3*
FABRICANTE: *Manufacturer:*	*D&D Hardware*
REFERENCIA: *Reference:*	*CE Mortise Hinge Grade 13*
SOLDADA O ATORNILLADA: *Welded or screwed:*	*Screwed*
CANTIDAD DE TORNILLOS DE LA BISAGRA A LA HOJA: *Screws / hinged on leaf:*	*4 screws per hinge*
CANTIDAD DE TORNILLOS DE LA BISAGRA AL MARCO: *Screws / hinged on frame:*	*4 screws per hinge*
POSICIÓN DE LAS BISAGRAS EN LA PUERTA: *Positon of the hinged on the door:*	*The position will be indicated in the attached drawing*

	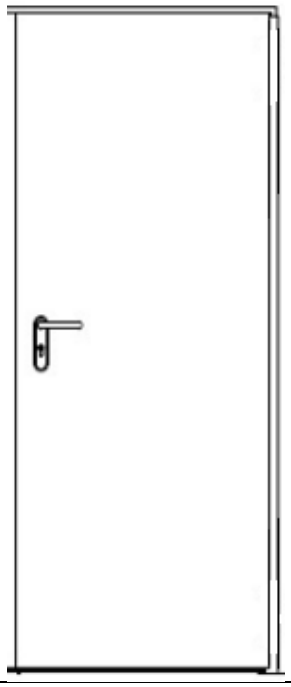 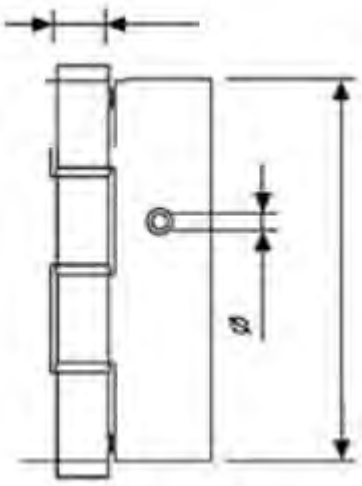
TETONES / Dog bolts - none	
UNIDADES: *Units:*	*NA*
FABRICANTE: *Manufacturer:*	*NA*
REFERENCIA: *Reference:*	*NA*
DIMENSIONES: *Dimensions:*	*NA*
MATERIAL: *Material:*	*NA*
POSICIÓN EN LA HOJA: *Position on the leaf:*	*NA*
SISTEMA DE FIJACIÓN: *Method of fixing:*	*NA*
PLACA ELECTROIMÁN / Armature - none	
UNIDADES:	*NA*
FABRICANTE:	*NA*
REFERENCIA:	*NA*
SITUACIÓN:	

	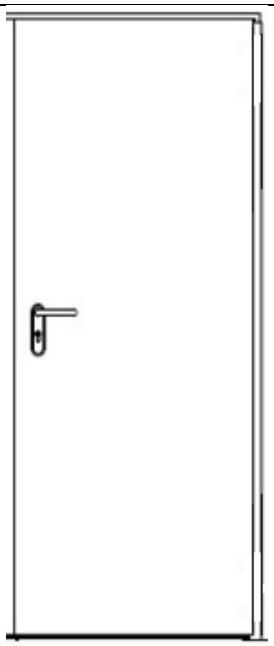
GUILLOTINA / Drop seal	
FABRICANTE: *Manufacturer:*	Fire & Acoustic Solution Pte Ltd
REFERENCIA: *Reference:*	SEALz Intumescent fire seal with optinal smoke seals
DIMENSIONES: *Dimensions:*	Height/width 3.2cm/2cm
LONGITUD: *Longitude:*	915 cm
OTROS HERRAJES: / Other hardware:	
FABRICANTE: *Manufacturer:*	*NA*
REFERENCIA: *Reference:*	*NA*
MATERIAL Y CARACTERÍSTICAS TÉCNICAS: *Materials and characteristics:*	*NA*
SITUACIÓN: *Placed:*	*NA*
OTROS HERRAJES: / Other hardware:	
FABRICANTE: *Manufacturer:*	*NA*
REFERENCIA: *Reference:*	*NA*
MATERIAL Y CARACTERÍSTICAS TÉCNICAS: *Materials and characteristics:*	*NA*
SITUACIÓN: *Placed:*	*NA*

9. VIDRIOS / *GLASS - none*

UNIDADES: *Units:*	*NA*
FABRICANTE: *Manufacturer:*	*NA*
REFERENCIA: *Reference:*	*NA*
TIPO DE VIDRIO (único, laminado,...): *Type of glass:*	*NA*
SI ES LAMINADO: *Laminated:*	*GRUESO DE LAS LÁMINAS (mm):* *Thickness of sheets (mm):* *GRUESO DE LAS CÁMARAS (mm):* *Thickness of air chamber (mm):*
DIMENSIONES EXTERIORES (CONTANDO EL MARCO): *Total dimensions (with glass frame)*	*ALTURA Height (mm):* *ANCHURA Width (mm):* *DIÁMETRO Diamater (mm):*
DIMENSIONES DE PASO DE LUZ: *Clear opening:*	*ALTURA Height (mm):* *ANCHURA Width (mm):* *DIÁMETRO Diamater (mm):*
DIMENSIONES DEL VIDRIO: *Glass dimensions:*	*ALTURA Height (mm):* *ANCHURA Width (mm):* *DIÁMETRO Diamater (mm):*
PESO Weight (Kg):	
UNIÓN ENTRE EL VIDRIO Y LA HOJA O EL JUNQUILLO: *Joint between glass and leaf or glassing bead:*	*NA*
UNIÓN ENTRE JUNQUILLO Y HOJA: *Joint between bead and leaf:*	*NA*
CROQUIS DE LA SECCIÓN DE LA UNIÓN ENTRE VIDRIO Y HOJA: *Croquis of the section of the union between glass and leaf:* *DIMENSIONES HOLGURAS VIDRIOS:* *Dimensions of clearances glass:*	

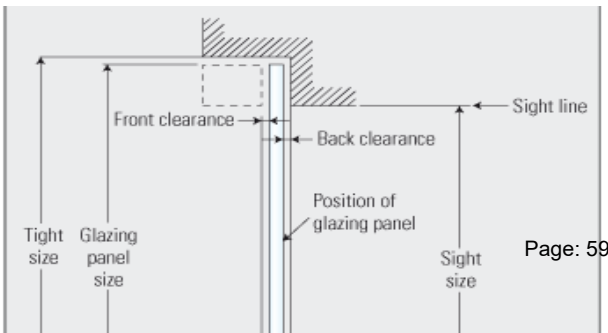

GLAZING PANEL SIZE (mm): *EDGE CLEARENCE (mm):* *EDGE COVER (mm):* *GLAZING CHANEL REBATE (mm):* *FRONT AND BACK CLEARENCE (mm):*

DETALLES ALTERNATIVOS DE LA SECCIÓN DE LA UNIÓN ENTRE VIDRIO Y HOJA: *Alternative details of the section of the union between glass and leaf:*	*NA*

10. REJILLAS / *Grids - none*

UNIDADES: *Units:*	*NA*
FABRICANTE:	*NA*

Manufacturer:	
REFERENCIA: *Reference:*	*NA*
DIMENSIONES EXTERIORES (CONTANDO EL MARCO): *Total dimensions:*	*ALTURA Height (mm):* *ANCHURA Width (mm):* *DIÁMETRO Diamater (mm):*
DIMENSIONES DE LA REJILLA: *Grids dimensions:*	*ALTURA Height (mm):* *ANCHURA Width (mm):* *DIÁMETRO Diamater (mm):*
PESO Weight (Kg):	
UNIÓN ENTRE LA REJILLA Y LA HOJA: *Union between the grille and the leaf:*	*NA*

11. OTROS ELEMENTOS (motores, amortiguadores, etc.) *Others elements*

FABRICANTE *Manufacturer: NA*
MODELO

Model: NA

12. PLANOS / *Drawings*

INCLUIR LOS SIGUIENTES PLANOS COMPLETAMENTE ACOTADOS: *- Elevation of the exposed face and the unexposed one.Sección (importante ver la composición de la puerta).* *Details:* *i. Union between the leaf and the frame (with indication of clearances).Unión entre hojas (con indicación de holguras).* *ii. Union between glass and adjacent element.* *iii. Fixing system from frame to construction.* *iv. Union between the blade and guides if any (with indication of clearances).*

13. FICHAS TÉCNICAS Y CERTIFICADOS

INCLUIR LAS SIGUIENTES FICHAS TÉCNICAS Y CERTIFICADOS CON MARCADO CE DE LOS SIGUIENTES HERRAJES, EN CASO DE LLEVARLOS: • Bisagras de un solo Eje. • Dispositivos de cierre controlado la puerta. • Dispositivos de retención controlados eléctricamente. • Sistemas de retención controlados electromagnéticamente. • Dispositivos de coordinación de puerta. • Manillas y pomos de Puertas. • Cerraduras y picaportes mecánicos. • Cilindros para cerraduras. • Dispositivos para salida de emergencias. • Dispositivos antipánicos. • Cerraduras y cerraderos electromecánicos. • Dispositivos para salidas de emergencia controlados eléctricamente. • Sistemas antipánico controlados eléctricamente.

Inspector:	*Made in the presence of:*

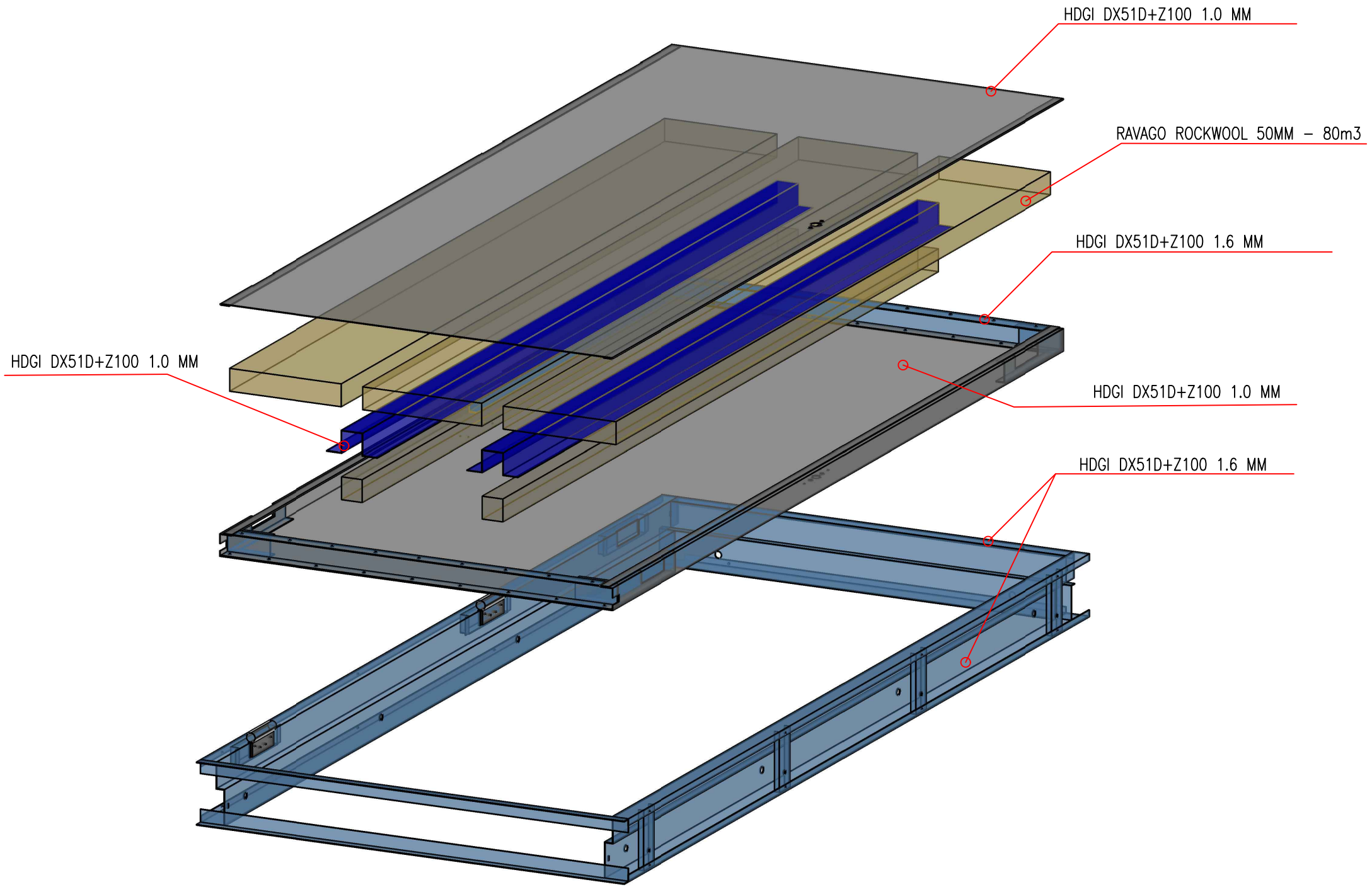
HDGI DX51D+Z100 1.0 MM
RAVAGO ROCKWOOL 50MM – 80m3
HDGI DX51D+Z100 1.6 MM
HDGI DX51D+Z100 1.0 MM
HDGI DX51D+Z100 1.0 MM
HDGI DX51D+Z100 1.6 MM

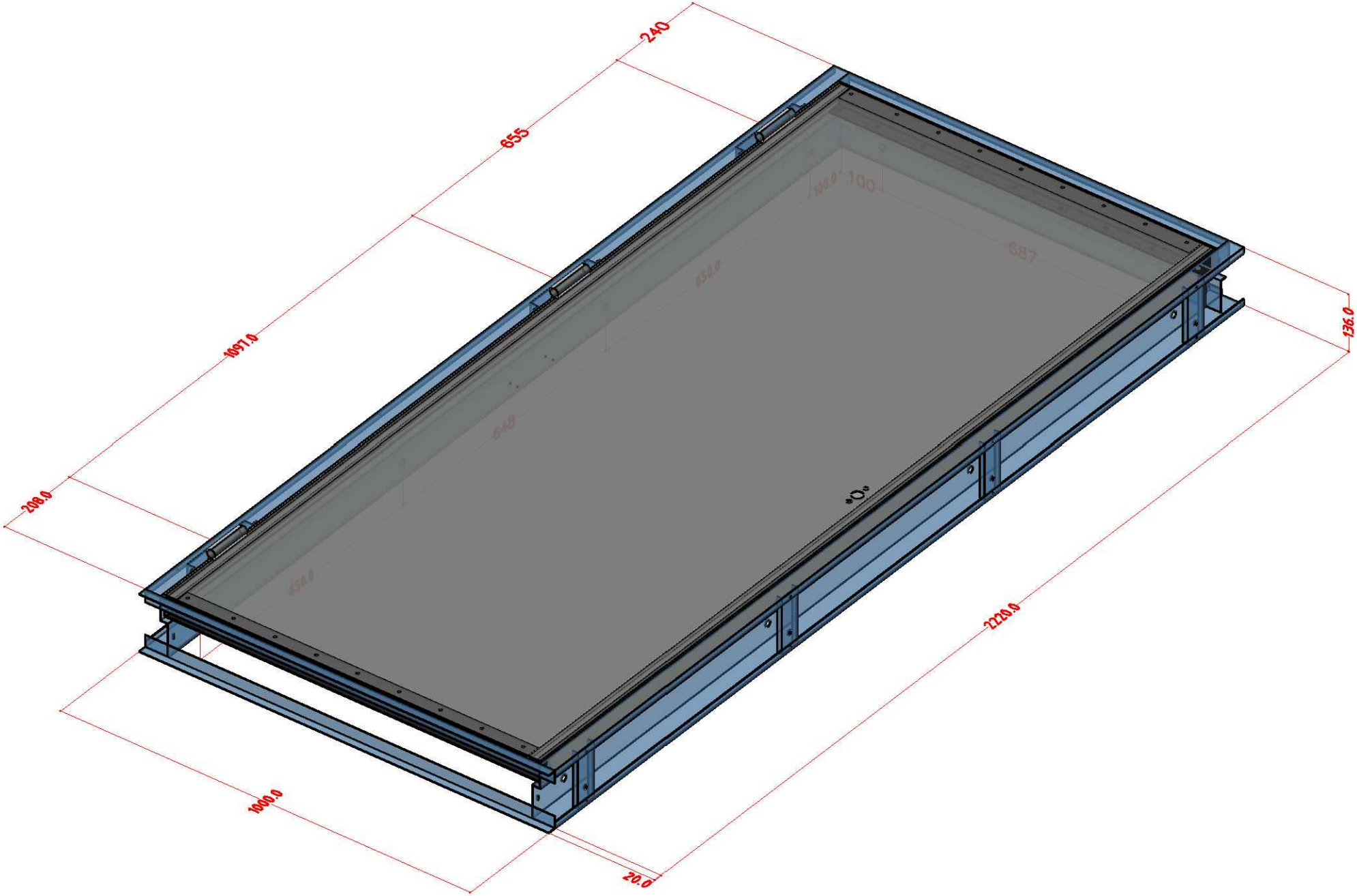
240
655
1097.0
208.0
136.0
2210.0
1600.0
20.0

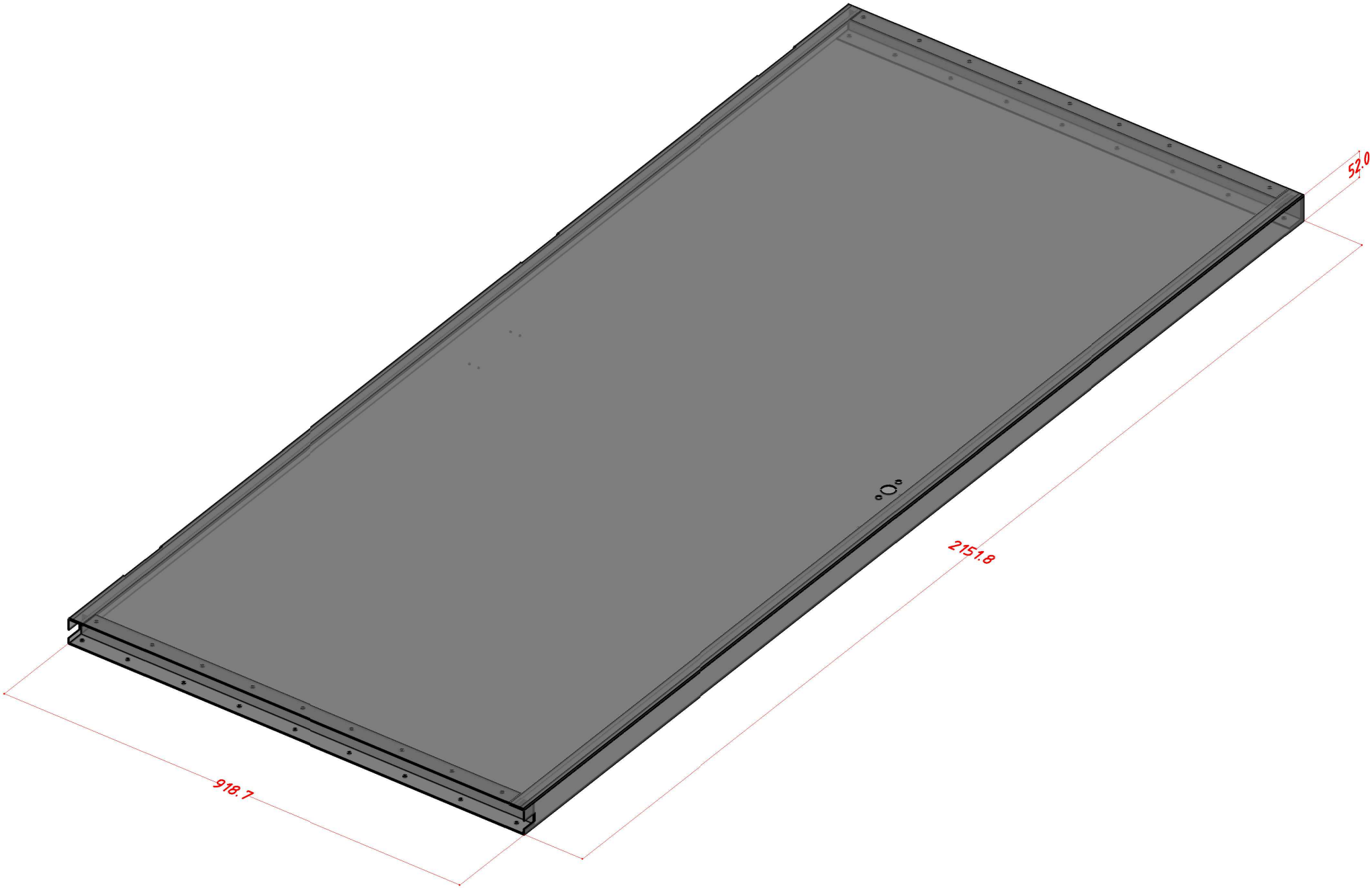
52.0
2151.8
918.7

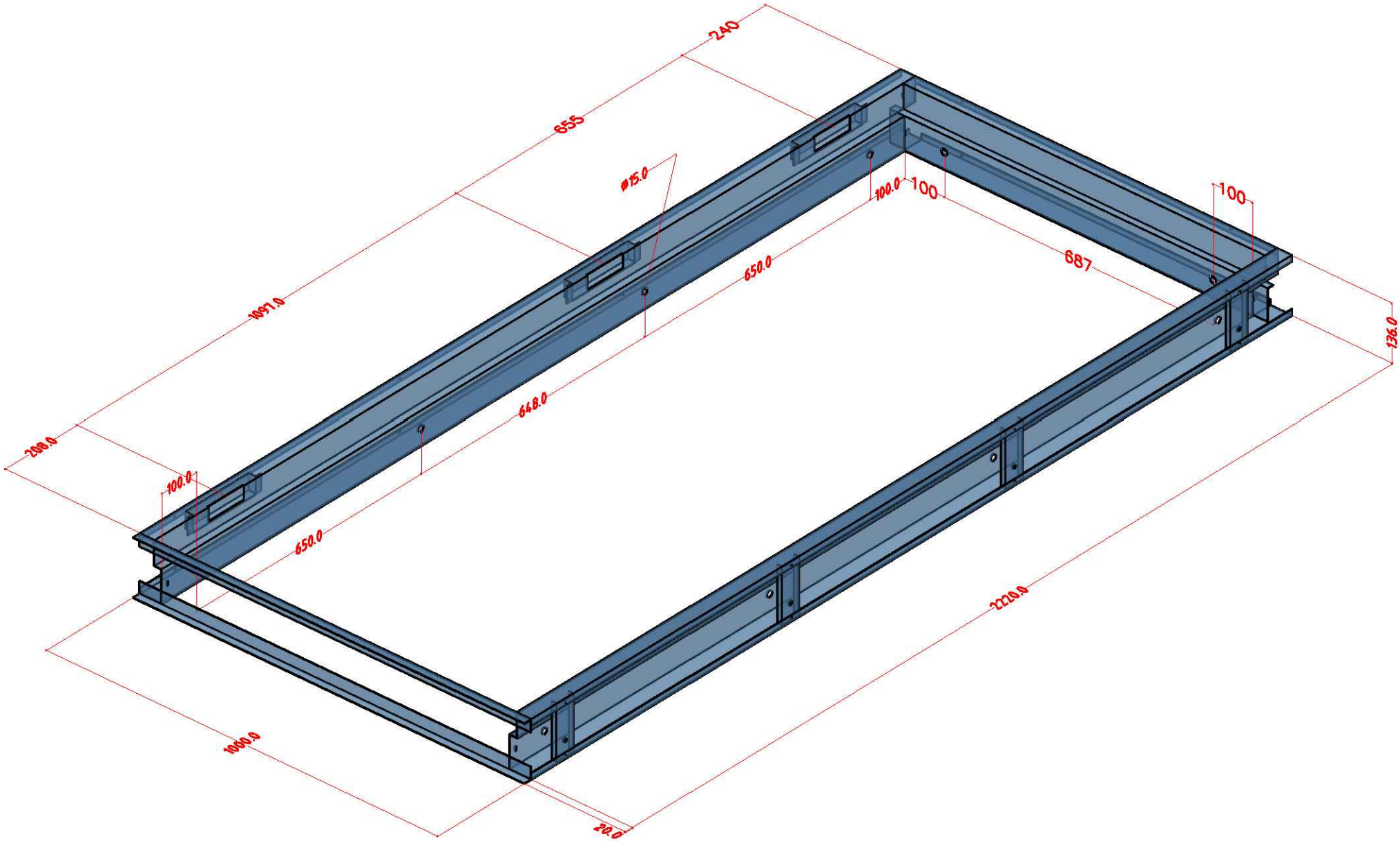
240
655
ø15.0
100.0
100
100
687
1097.0
650.0
648.0
208.0
100.0
650.0
136.0
2220.0
1060.0
20.0

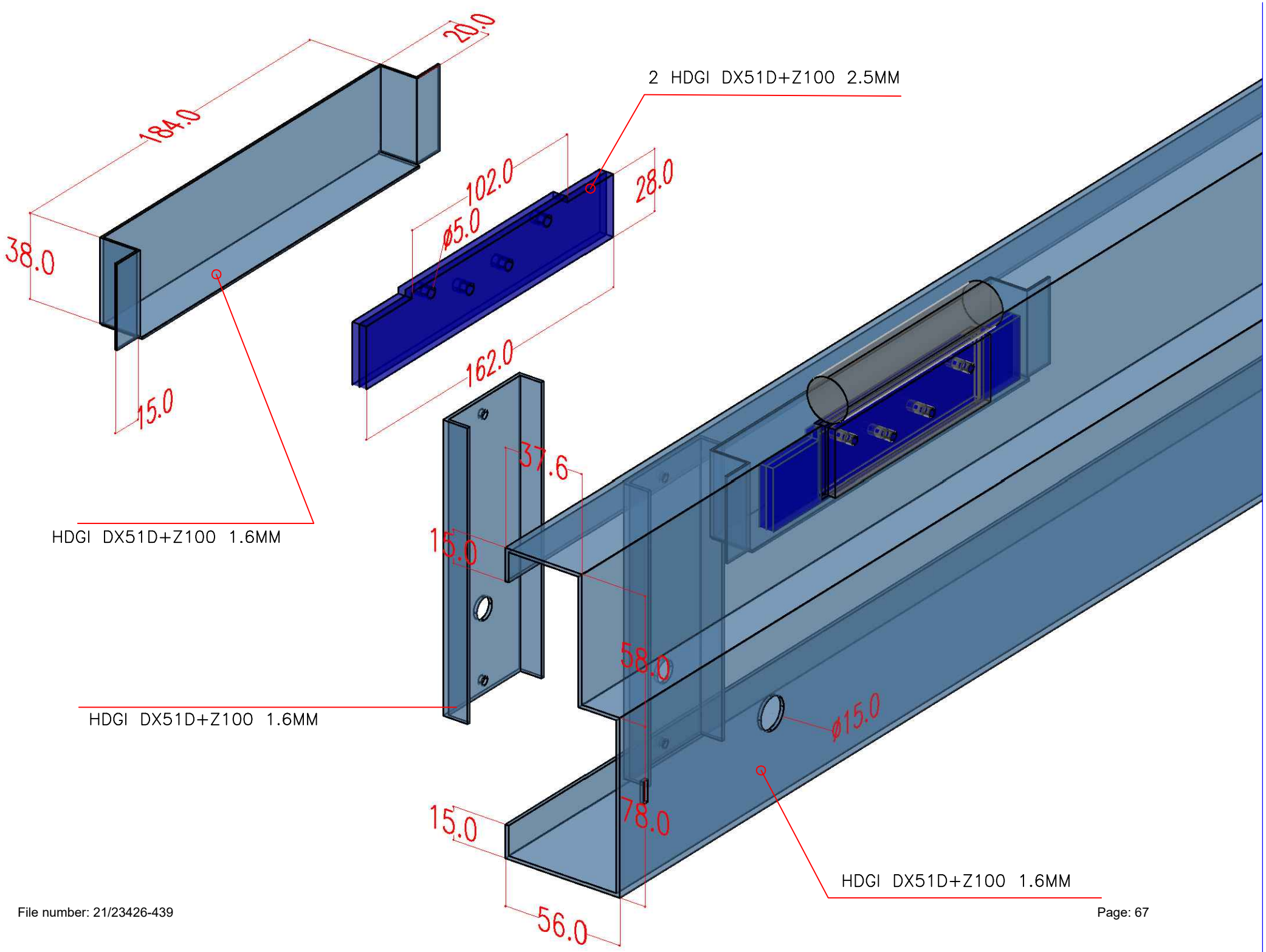
20.0
184.0
38.0
15.0
2 HDGI DX51D+Z100 2.5MM
102.0
ø5.0
28.0
162.0
HDGI DX51D+Z100 1.6MM
37.6
15.0
58.0
ø15.0
HDGI DX51D+Z100 1.6MM
15.0
78.0
56.0
HDGI DX51D+Z100 1.6MM

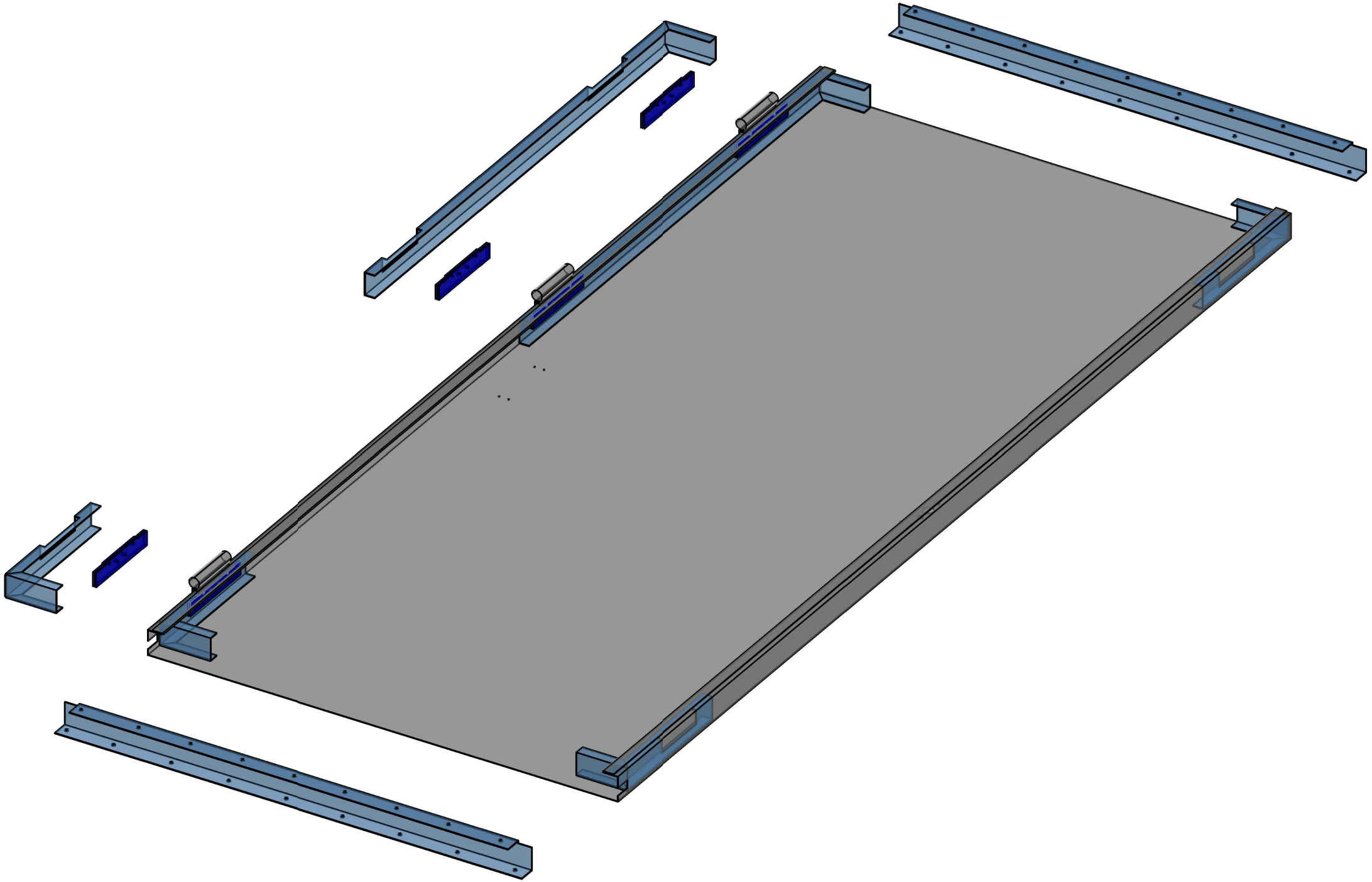

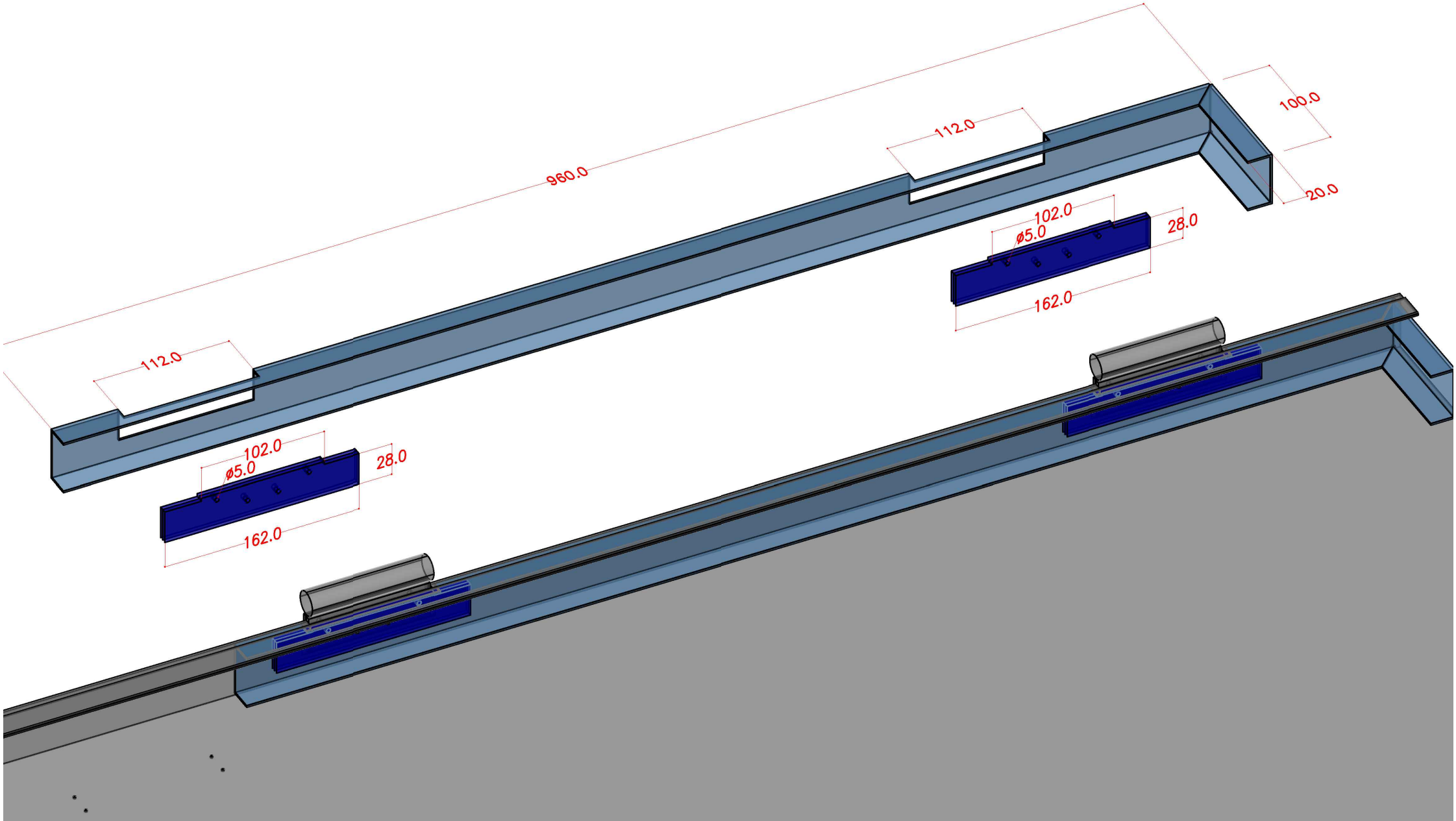
960.0
112.0
100.0
20.0
102.0
ø5.0
28.0
162.0
112.0
102.0
ø5.0
28.0
162.0

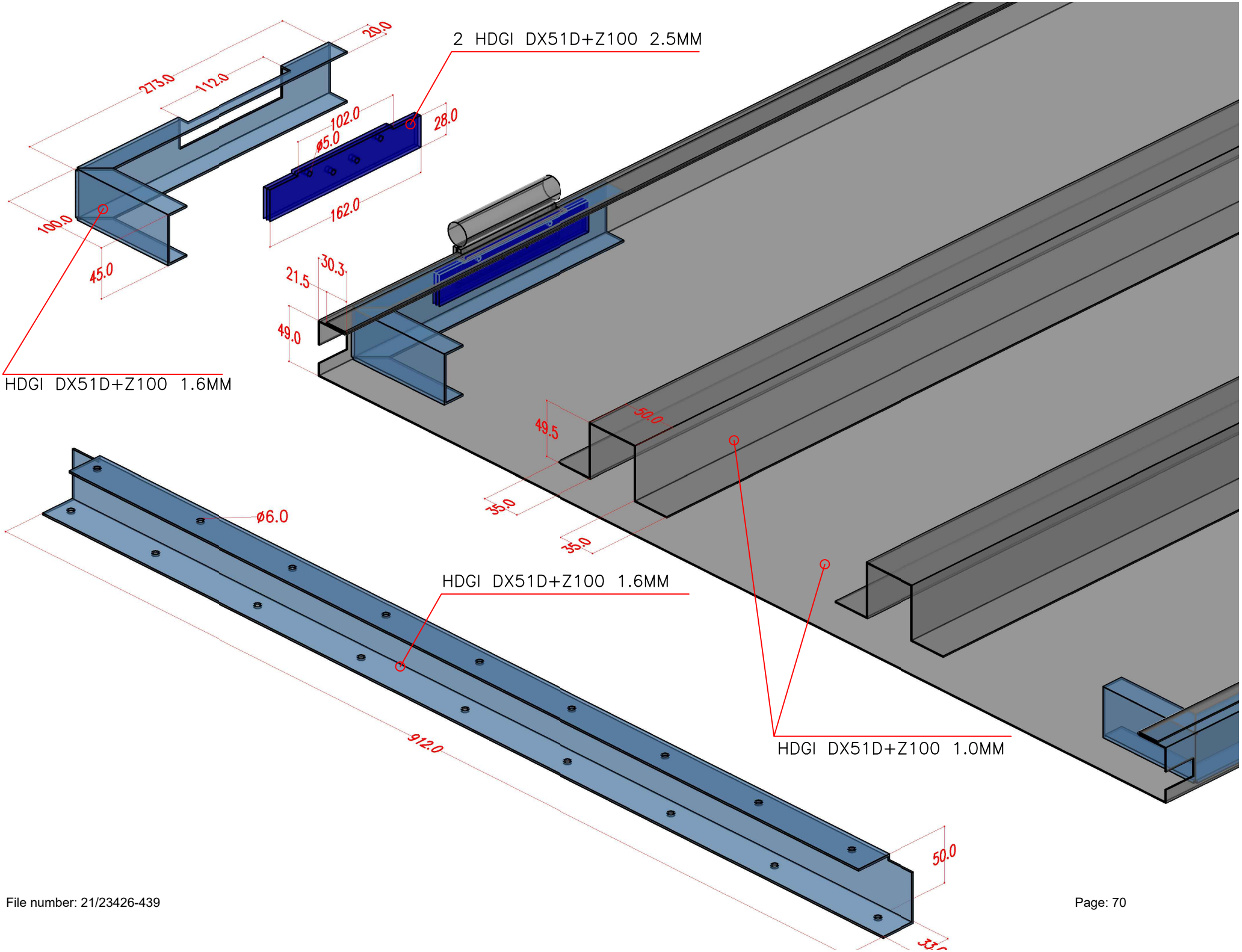
2 HDGI DX51D+Z100 2.5MM
HDGI DX51D+Z100 1.6MM
HDGI DX51D+Z100 1.6MM
HDGI DX51D+Z100 1.0MM
273.0
112.0
20.0
102.0
ø5.0
28.0
162.0
100.0
45.0
30.3
21.5
49.0
49.5
50.0
35.0
35.0
ø6.0
912.0
50.0
33.0

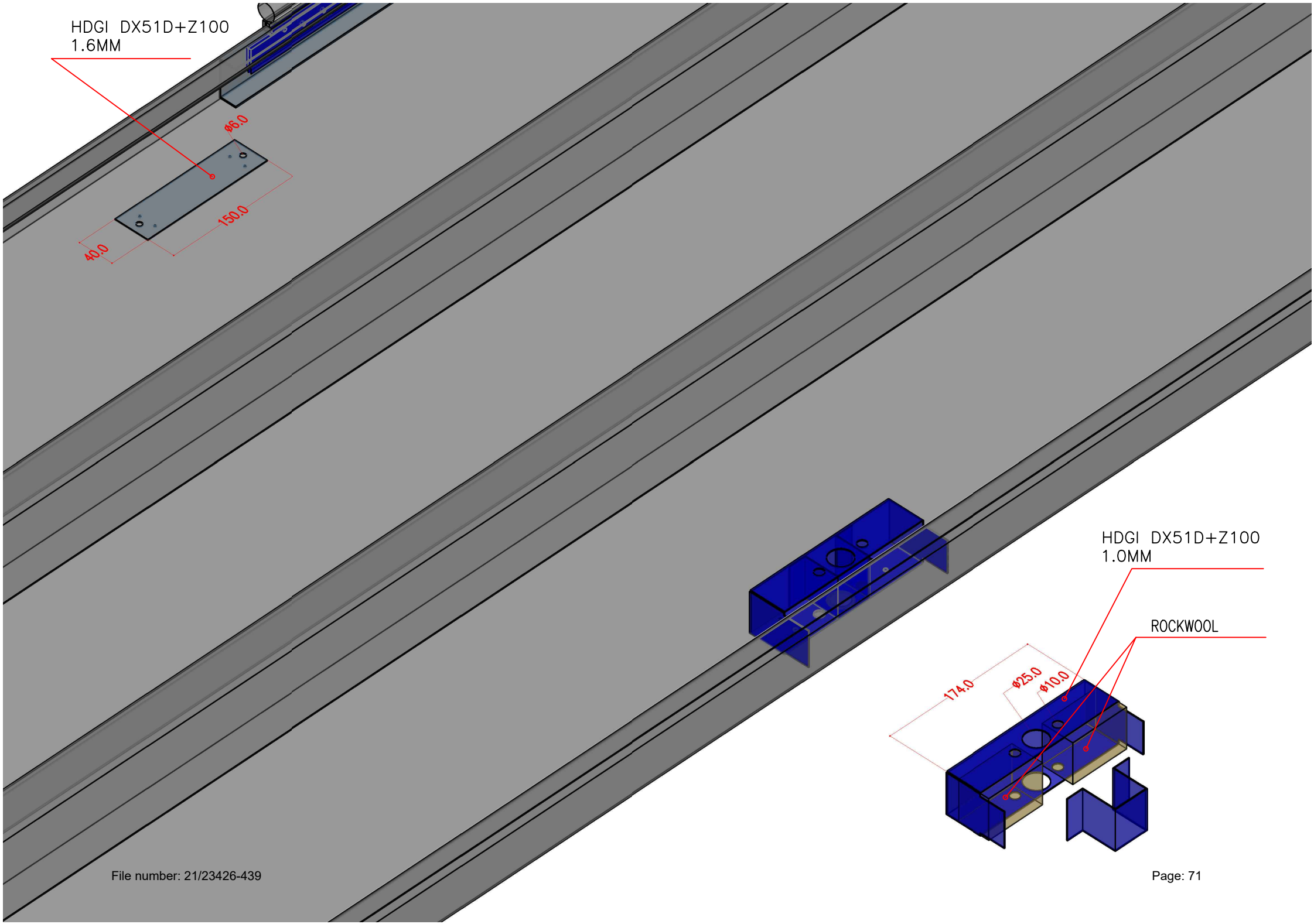
HDGI DX51D+Z100
1.6MM
ø6.0
150.0
40.0
HDGI DX51D+Z100
1.0MM
ROCKWOOL
174.0
ø25.0
ø10.0

1. INFORMACIÓN PRINCIPAL / *Principal information*

Nº DE EXPEDIENTE: *File number:*	21/23426-439
NUEVA GAMA (ref.): *New range (ref.):*	*NA*
NUEVO ENSAYO (Si / No):	*Yes*
REPETICIÓN DE ENSAYO (Si / No) (Que expediente repite?) (Es igual a otra puerta pero en otro sentido de abertura?): *Test repeat (Yes / No)*	*NO*
TIPO DE PUERTA: *Type of door:*	*Single Leaf Steel fire door, with rockwool insulation*
LADO DE EXPOSICIÓN: *Exposed face:*	*Inside (considering the door is opening inside out)*
CLASIFICACIÓN OBJETIVO: *Target classification:*	*EI 60*

2. DATOS GENERALES / *General data*

Nº DE PUERTAS INSPECCIONADAS: *Nº of inspected doors:*	*1 pieces*
DIMENSIONES TOTALES DE LA PUERTA: *Total dimensions of the door:*	*ANCHURA (mm):* *Width (mm): 1000* *ALTURA (mm):* *Height (mm): 2200*
DIMENSIONES TOTALES DE LA HOJA ACTIVA: *Total dimensions of active leaf:*	*ANCHURA (mm):* *Width (mm):918* *ALTURA (mm):* *Height (mm): 2154*
DIMENSIONES TOTALES DE LA HOJA PASIVA: *Total dimensions of passive leaf:*	*ANCHURA (mm):* *Width (mm):* *ALTURA (mm):* *Height (mm):*
DIMENSIONES DE PASO LIBRE DE LA PUERTA: *Clear opening:*	*ANCHURA (mm):* *Width (mm): 847* *ALTURA (mm):* *Height (mm):2145*

3. DATOS DEL PRODUCTO / *Product data*

REFERENCIA COMERCIAL: *Comercial reference:*	*ELP-FD-SL – Single Leaf Fire door*
TIPO DE PUERTA (batiente, corredera, enrollable, etc): *Type of door:*	*Single Lead Hinged doors*
MATERIAL PRINCIPAL (de hoja y marco): *Principal material (leaf and frame):*	*Leaf – Galvanized metal sheet 1 mm thickness + Rockwool + Expandable Glue/adhesive* *Frame - Galvanized metal sheet 1,6 mm thickness*
NÚMERO DE HOJAS: *Number of leafs*	*SIMPLE* ☐ *DOBLE* ☐ *Single* *Double*
NÚMERO DE PANELES POR HOJA: *Number of panels per leaf*	*ONE Leaf*
ANCHO DE PANELES: *Width of panels*	*Total Dimensions: XX* *Clear Opening: XXX* *Net Leaf Dimensions: XXX*
PESO DE LA PUERTA (CON MARCO) (kg): *Weight of door (with frame) (Kg): 77kg (+- 2kg)*	*PESO DE LA HOJA (SIN MARCO) (kg):* *Weight of door (without frame) (Kg): 47 (+- 2kg)*

4. PRE-MARCO / *Pre-frame*

FABRICANTE: *Manufacturer:*	*NA* *The door does not have a pre-frame, the frame is directly attached to the constraction*
REFERENCIA: *Reference:*	*NA*
DIMENSIONES EXTERIORES (alto x ancho)(mm): *Outsied dimensions (height x width) (mm):*	*NA*
MATERIAL: *Material:*	*NA*
ESPESOR: *Thickness*	*NA*
MÉTODO DE FIJACIÓN DEL PRE-MARCO A OBRA: *Method of fixing the pre-frame to construction:*	*NA*
NÚMERO Y MATERIAL DE ANCLAJES DEL PRE-MARCO A OBRA Y DISTANCIA ENTRE ELLOS (mm). CROQUIS ACOTADO DEL TIPO DE FIJACIÓN:	*NA*

Number and material of anchorages of the pre-frame to construction and distance between them (mm). fFxed skirt of the type of fixation:	
CROQUIS DE LA SECCIÓN DEL PERFIL DEL PRE-MARCO (Lado activo, pasivo, superior e inferior): *Sketch of the pre-frame profile section (active, passive, superior and inferior side):*	*NA*
MÉTODO DE UNIÓN ENTRE PERFILES (Soldado, atornillado): *Method of union between profiles (soldier, bolted):*	*NA*
ACABADOS O REVESTIMIENTOS DEL PRE-MARCO: *Finishes or pre-frame coatings:*	*NA*

5. MARCO / *Frame*

FABRICANTE: *Manufacturer:*	*Ltd El+*
REFERENCIA: *Reference:*	*www.elplus.ge*
DIMENSIONES EXTERIORES (alto x ancho mm): *Outsied dimensions (height x width) (mm):*	*Height – 2220 mm* *Width – 1000 mm*
MATERIAL: *Material:*	*Galvanized metal sheet*
ESPESOR: *Thickness:*	*1.6 mm thickness*
MÉTODO DE FIJACIÓN DEL MARCO A PREMARCO/OBRA: *Method of fixing the frame to pre-frame or construction:*	1. *The frame is fixed into the opening using triangle wood pieces.* 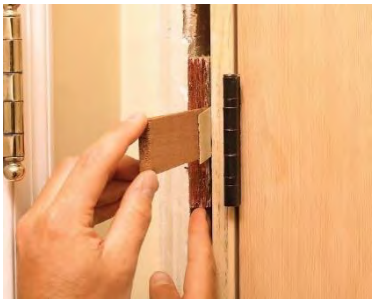

	2. *We make sure that all the Jambs are as straight as possible with spirit tool.* 3. *We fill out the corners with fireproof foam for fixation and put long sticks in to the frame so that the foam does not couse the frame to change possition.* 4. *We wait for 8 hours until the foam is completely dry and remove the wooden sticks and triangle pieces that were there to make sure the frame stayed in its place.* 5. *Install the frame to the construction using Long screws*  6. *We fill rest of the space with the fireproof foam.*
NÚMERO Y MATERIAL DE ANCLAJES DEL MARCO A PREMARCO/OBRA Y DISTANCIA ENTRE ELLOS (mm). CROQUIS ACOTADO DEL TIPO DE FIJACIÓN: *Number and material of anchorages of the frame to pre-frame or construction and distance between them (mm). fFxed skirt of the type of fixation:*	*Totally 10 pieces of long metal screws or metal anchors.* *4 screws on right side* *4 screws on left side* *2 screws on top* *Please check the drawing for locations and details.*
CROQUIS DE LA SECCIÓN DEL PERFIL DEL MARCO (Lado activo, pasivo, superior e inferior): *Sketch of the pre-frame profile section (active, passive, superior and inferior side):*	*NA – dont have pre-frame.*
MÉTODO DE UNIÓN ENTRE PERFILES (Soldado, atornillado): *Method of union between profiles (soldier, bolted):*	*Sides and top of the frame welded.*
ACABADOS O REVESTIMIENTOS DEL MARCO: *Finishes or frame coatings:*	*No coatings*

6. HOJAS / *Leafs*

INTERIOR HOJA / Inside leaf	
DETALLE GENERAL DE LA MUESTRA: *GENERAL DETAIL OF THE SAMPLE:*	*The door leaf is 52 mm in thickness, insulated with rockwool.*

	We use two long stiffening elements across the height of the door leaf. And 4 more for corners. – please check drawings for more information
FABRICANTE: *Manufacturer:*	*Ravago*
MODELO: *Reference:*	*https://www.ravago.com/ - please check TDS for more information* *STONEWOOL BOARD* *Thermal insulation products for buildings - Factory made mineral wool (MW) products*
TIPO DE MATERIAL: *Type of material:*	*Rockwool*
ESPESOR (mm): *Thickness (mm):*	*50 mm*
DENSIDAD (kg/m³): *Density (kg/m³):*	*80 kg/m3*
MÉTODO DE FIJACIÓN: *Method of fixing:*	*Using adhesive – check below*
OBSERVACIONES: *Observations:*	The door leaf completly filled with the rockwool.
FABRICANTE: *Manufacturer:*	*Weiss Chemie*
MODELO: *Reference:*	*COSMO PU-160.260*
TIPO DE MATERIAL: *Type of material:*	*1 component Adhesive - COSMO PU-160.260*
ESPESOR (mm): *Thickness (mm):*	*NA*
DENSIDAD (kg/m³): *Density (kg/m³):*	*approx. 1.14 g/cm3*
MÉTODO DE FIJACIÓN: *Method of fixing:*	*NA*
OBSERVACIONES: *Observations:*	*NA*
FABRICANTE: *Manufacturer:*	*TATMETAL*
MODELO: *Reference:*	*http://www.tatmetal.com.tr/*
TIPO DE MATERIAL: *Type of material:*	*Galvanized metal sheet*
ESPESOR (mm): *Thickness (mm):*	*1 mm*
DENSIDAD (kg/m³): *Density (kg/m³):*	*NA*

MÉTODO DE FIJACIÓN: *Method of fixing:*	*The adhesive used for 2 long stiffening elements and Welding for everything else.*
OBSERVACIONES: *Observations:*	
FABRICANTE: *Manufacturer:*	
MODELO: *Reference:*	
TIPO DE MATERIAL: *Type of material:*	
ESPESOR (mm): *Thickness (mm):*	
DENSIDAD (kg/m³): *Density (kg/m³):*	
MÉTODO DE FIJACIÓN: *Method of fixing:*	
OBSERVACIONES: *Observations:*	
REFUERZOS INTERIORES DE LA HOJA / Internal reinforcements of the leaf	
FABRICANTE: *Manufacturer:*	*Ltd EL+*
MODELO: *Reference:*	
TIPO DE MATERIAL: *Type of material:*	*2 of reinforcements along the door length -* *Galvanized sheet – 1mm thickness*
ESPESOR (mm): *Thickness:*	
DENSIDAD (kg/m³): *Density:*	
MÉTODO DE FIJACIÓN: *Method of fixing:*	*Using adhesive*
DETALLE: *Details and observations:*	
FABRICANTE: *Manufacturer:*	*Ltd EL+*
MODELO: *Reference:*	
TIPO DE MATERIAL:	*4 reinforcements in the corners –*

Type of material:	*Galvanized sheet – 1.6 mm thickness*
ESPESOR (mm): *Thickness:*	
DENSIDAD (kg/m³): *Density:*	
MÉTODO DE FIJACIÓN: *Method of fixing:*	*Welding*
DETALLE: *Details and observations:*	
SISTEMA DE UNIÓN ENTRE AISLAMIENTOS / Union system between isolations	
FABRICANTE: *Manufacturer:*	*Weiss-chemie*
REFERENCIA: *Reference:*	*COSMO PU-160.260*
TIPO (cola, grapas,...): *Type (glue, staple,...):*	*Glue*
LUGAR: *Place:*	*The glue used on top of the rockwool as well as on the bottom.*
FABRICANTE: *Manufacturer:*	
REFERENCIA: *Reference:*	
TIPO (cola, grapas,...): *Type (glue, staple,...):*	
LUGAR: *Place:*	
SISTEMA DE UNIÓN ENTRE CHAPAS / Union system between sheets	
TIPO Y PIEZA (soldado, perfilado, atornillado...): *Type (welded, profiled, screwed):*	*Welding*
LUGAR: *Place:*	Dots all arround the door leaf.
DISTANCIA ENTRE ELLOS: *Distance between them:*	*10-12 cm on top and bottom* *20-22 cm on the sides*
TIPO Y PIEZA (soldado, perfilado, atornillado...): *Type (welded, profiled, screwed):*	
LUGAR: *Place:*	
DISTANCIA ENTRE ELLOS: *Distance between them:*	
ACABADOS O REVESTIMIENTOS DE LA HOJA ***–any finish or coating are not used, Just the galvanized sheet***	
FABRICANTE: *Manufacturer:*	*NA*
REFERENCIA: *Reference:*	*NA*

TIPO: *Type:*	*NA*
LUGAR (ambas caras): *Paced (both faces):*	*NA*
ESPESOR (mm): *Thickness 8mm):*	*NA*
SISTEMA DE FIJACIÓN A HOJA: *Leaf fixing system:*	*NA*
TAPAJUNTAS / Joint coverings - none	
MATERIAL: *Material:*	*NA*
POSICIÓN EN LA HOJA: *Leaf position:*	*NA*
DIMENSIONES DEL PERFIL: *Dimensions of profil·les:*	*NA*
DETALLE: *Details:*	*NA*

7. PRODUCTOS INTUMESCENTES DE LAS JUNTAS Y OTROS
Joints Intumescent products and others

FABRICANTE: *Manufacturer:*	*Pyroplex*
REFERENCIA: *Reference:*	*Intumescent Strip – Fire only - Certifire CF355*
DIMENSIONES: *Dimensions:*	*ANCHURA (mm):* *Width (mm): 20mm* *ESPESOR (mm):* *Thickness (mm):2mm*
DISTRIBUCIÓN DE LA JUNTA EN LA HOJA: *Leaf position:*	*NA*
DISTRIBUCIÓN DE LA JUNTA EN EL MARCO: *Frame position:*	*Intumescent seal is located around the frame. Please check drawings for position details.*
FABRICANTE: *Manufacturer:*	SANOK RUBBER COMPANY S.A.
REFERENCIA: *Reference:*	*RUBBER COMPOUND 6EP3001 (FC-30)*
DIMENSIONES: *Dimensions:*	*ANCHURA (mm):* *Width (mm):* **9mm** *ESPESOR (mm):* *Thickness (mm):7.5mm*
DISTRIBUCIÓN DE LA JUNTA EN LA HOJA: *Leaf position:*	
DISTRIBUCIÓN DE LA JUNTA EN EL MARCO: *Frame position:*	*Smoke and voice seal is located around the frame. Please check drawings for position details.*
FABRICANTE: *Manufacturer:*	
REFERENCIA: *Reference:*	
DIMENSIONES:	*ANCHURA (mm):*

Dimensions:	*Width (mm):* *ESPESOR (mm):* *Thickness (mm):*
DISTRIBUCIÓN DE LA JUNTA EN LA HOJA: *Leaf position:*	
DISTRIBUCIÓN DE LA JUNTA EN EL MARCO: *Frame position:*	

8. HERRAJES */ Hardware*

CERRADURA / Lock	
FABRICANTE: *Manufacturer:*	*D&D hardware*
REFERENCIA: *Reference:*	DDML009 Fire Sash Lock
MATERIAL INTUMESCENTE (Marca, Referencia y ubicación en la muestra): *Instumencent material cover:*	*NA*
PORTACERRADURAS: *Lock profile fixation:*	*X*
INDICAR POSICIÓN DE LA CERRADURA EN LA PUERTA ***The position will be indicated in the attached drawing*** *A:* *B:* *C:* *D:* *E:* *F:* *G:* *En caso de llevar cierre arriba/abajo incluir la misma información*	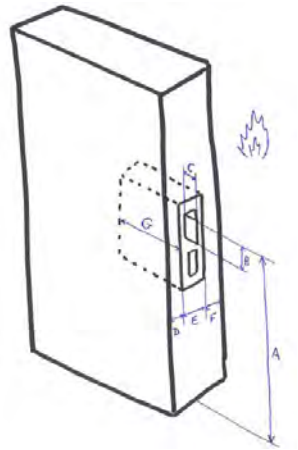
CONTRA-CERRADURA / Opposite lock	
FABRICANTE: *Manufacturer:*	*NA*
REFERENCIA: *Reference:*	*NA*
FALLEBAS: *Profiles:*	*NA*
CIERRAPUERTAS / Door closer	

FABRICANTE: *Manufacturer*	*Dormakaba*
REFERENCIA: *Reference:*	*22212101 TS 71 EN 3/4* *DOOR CLOSER BODY SILVER* *22002301 TS 71/* *STANDARD SCISSOR ARM* *SILVER*
POSICIÓN DEL CIERRAPUERTAS: *Position of the door closer:*	*According to the door closer instructions* *CARA BISAGRAS / Hinged face:* *CARA NO BISAGRAS / Opposite hinged face:* *EMBUTIDO / Internal:* *SOBRE LA HOJA / On the leaf:* *SOBRE EL MARCO / On the frame:*
SELECTOR DE CIERRE / Door coordinator - none	
FABRICANTE: *Manufacturer:*	*NA*
REFERENCIA: *Reference:*	*NA*
POSICIÓN DEL SEELECTOR DE CIERRE: *Position of the closing selector:*	*CARA BISAGRAS / Hinged face:* *CARA NO BISAGRAS / Opposite hinged face:* *EMBUTIDO / Internal:* *SOBRE LA HOJA / On the leaf:* *SOBRE EL MARCO / On the frame:*
MANILLA / POMO Handle / Knob	
UNIDADES: *Units:*	*2 handles*
FABRICANTE: *Manufacturer:*	*D&D hardware* *https://www.dndhardware.com/*
REFERENCIA: *Reference:*	*DDTP003*
TIPO Y MATERIAL: *Type and material:*	*Lever handle with plate, stainless steel 304*
SITUACIÓN: *Placed:*	*The position will be indicated in the attached drawing*
UNIDADES: *Units:*	*NA*
FABRICANTE: *Manufacturer:*	*NA*
REFERENCIA: *Reference:*	*NA*
TIPO Y MATERIAL: *Type and material:*	*NA*
SITUACIÓN: *Placed:*	*NA*
BARRA ANTIPÁNICO / Anti-panic device -none	
UNIDADES: *Units:*	*NA*
FABRICANTE: *Manufacturer:*	*NA*

REFERENCIA: *Reference:*	*NA*
TIPO Y MATERIAL: *Type and material:*	*NA*
UNIDADES: *Units:*	*NA*
FABRICANTE: *Manufacturer:*	*NA*
REFERENCIA: *Reference:*	*NA*
TIPO Y MATERIAL: *Type and material:*	*NA*
BOMBÍN (en caso de ser independiente) / Cilynder	
FABRICANTE: *Manufacturer:*	*D&D hardware* *https://www.dndhardware.com/*
REFERENCIA: *Reference:*	*Thumbturn Cylinder with Key* *DDLC004*
BISAGRAS / Hinges	
TIPO DE BISAGRA: *Hinges:*	*Ball bearing hinges*
UNIDADES: *Units:*	*3*
FABRICANTE: *Manufacturer:*	*D&D Hardware*
REFERENCIA: *Reference:*	*CE Mortise Hinge Grade 13*
SOLDADA O ATORNILLADA: *Welded or screwed:*	*Screwed*
CANTIDAD DE TORNILLOS DE LA BISAGRA A LA HOJA: *Screws / hinged on leaf:*	*4 screws per hinge*
CANTIDAD DE TORNILLOS DE LA BISAGRA AL MARCO: *Screws / hinged on frame:*	*4 screws per hinge*
POSICIÓN DE LAS BISAGRAS EN LA PUERTA: *Positon of the hinged on the door:*	*The position will be indicated in the attached drawing*

	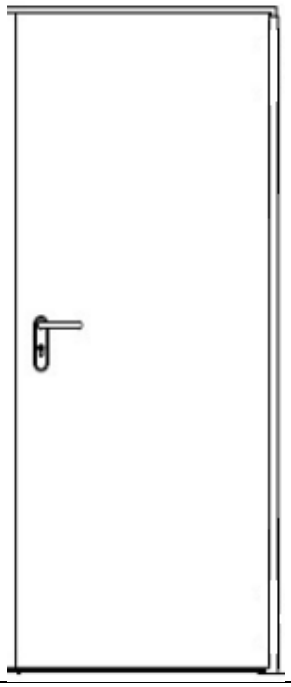 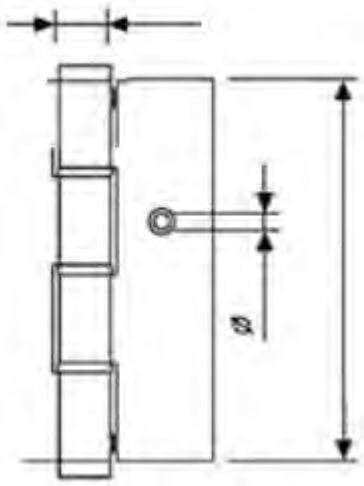
TETONES / Dog bolts - none	
UNIDADES: *Units:*	*NA*
FABRICANTE: *Manufacturer:*	*NA*
REFERENCIA: *Reference:*	*NA*
DIMENSIONES: *Dimensions:*	*NA*
MATERIAL: *Material:*	*NA*
POSICIÓN EN LA HOJA: *Position on the leaf:*	*NA*
SISTEMA DE FIJACIÓN: *Method of fixing:*	*NA*
PLACA ELECTROIMÁN / Armature - none	
UNIDADES:	*NA*
FABRICANTE:	*NA*
REFERENCIA:	*NA*
SITUACIÓN:	*NA*
GUILLOTINA / Drop seal - none	
FABRICANTE: *Manufacturer:*	*NA*
REFERENCIA:	*NA*

Reference:	
DIMENSIONES: *Dimensions:*	*NA*
LONGITUD: *Longitude:*	*NA*
OTROS HERRAJES: / Other hardware: Thumb turn lock	
FABRICANTE: *Manufacturer:*	*D&D Hardware*
REFERENCIA: *Reference:*	DDLK013
MATERIAL Y CARACTERÍSTICAS TÉCNICAS: *Materials and characteristics:*	
SITUACIÓN: *Placed:*	
OTROS HERRAJES: / Other hardware: Door viewer	
FABRICANTE: *Manufacturer:*	D&D Hardware
REFERENCIA: *Reference:*	DDDV004
MATERIAL Y CARACTERÍSTICAS TÉCNICAS: *Materials and characteristics:*	
SITUACIÓN: *Placed:*	

9. VIDRIOS / *GLASS - none*

UNIDADES: *Units:*	*NA*
FABRICANTE: *Manufacturer:*	*NA*
REFERENCIA: *Reference:*	*NA*
TIPO DE VIDRIO (único, laminado,...): *Type of glass:*	*NA*
SI ES LAMINADO: *Laminated:*	*GRUESO DE LAS LÁMINAS (mm):* *Thickness of sheets (mm):* *GRUESO DE LAS CÁMARAS (mm):* *Thickness of air chamber (mm):*
DIMENSIONES EXTERIORES (CONTANDO EL MARCO): *Total dimensions (with glass frame)*	*ALTURA Height (mm):* *ANCHURA Width (mm):* *DIÁMETRO Diamater (mm):*
DIMENSIONES DE PASO DE LUZ: *Clear opening:*	*ALTURA Height (mm):* *ANCHURA Width (mm):* *DIÁMETRO Diamater (mm):*

DIMENSIONES DEL VIDRIO: *Glass dimensions:*	*ALTURA Height (mm):* *ANCHURA Width (mm):* *DIÁMETRO Diamater (mm):*
PESO Weight (Kg):	*NA*
UNIÓN ENTRE EL VIDRIO Y LA HOJA O EL JUNQUILLO: *Joint between glass and leaf or glassing bead:*	*NA*
UNIÓN ENTRE JUNQUILLO Y HOJA: *Joint between bead and leaf:*	*NA*
CROQUIS DE LA SECCIÓN DE LA UNIÓN ENTRE VIDRIO Y HOJA: *Croquis of the section of the union between glass and leaf:* *DIMENSIONES HOLGURAS VIDRIOS:* *Dimensions of clearances glass:* *GLAZING PANEL SIZE (mm):* *EDGE CLEARENCE (mm):* *EDGE COVER (mm):* *GLAZING CHANEL REBATE (mm):* *FRONT AND BACK CLEARENCE (mm):*	
DETALLES ALTERNATIVOS DE LA SECCIÓN DE LA UNIÓN ENTRE VIDRIO Y HOJA: *Alternative details of the section of the union between glass and leaf:*	*NA*

10. REJILLAS */ Grids - none*

UNIDADES: *Units:*	*NA*
FABRICANTE: *Manufacturer:*	*NA*
REFERENCIA: *Reference:*	*NA*
DIMENSIONES EXTERIORES (CONTANDO EL MARCO): *Total dimensions:*	*ALTURA Height (mm):* *ANCHURA Width (mm):* *DIÁMETRO Diamater (mm):*
DIMENSIONES DE LA REJILLA: *Grids dimensions:*	*ALTURA Height (mm):* *ANCHURA Width (mm):* *DIÁMETRO Diamater (mm):*
PESO Weight (Kg):	*NA*
UNIÓN ENTRE LA REJILLA Y LA HOJA: *Union between the grille and the leaf:*	*NA*

11. OTROS ELEMENTOS (motores, amortiguadores, etc.) *Others elements*

FABRICANTE *Manufacturer: NA*
MODELO *Model: NA*

12. PLANOS */ Drawings*

INCLUIR LOS SIGUIENTES PLANOS COMPLETAMENTE ACOTADOS:

- Elevation of the exposed face and the unexposed one.Sección (importante ver la composición de la puerta).
Details:

i. *Union between the leaf and the frame (with indication of clearances).Unión entre hojas (con indicación de holguras).*
ii. *Union between glass and adjacent element.*
iii. *Fixing system from frame to construction.*
iv. *Union between the blade and guides if any (with indication of clearances).*

13. FICHAS TÉCNICAS Y CERTIFICADOS

INCLUIR LAS SIGUIENTES FICHAS TÉCNICAS Y CERTIFICADOS CON MARCADO CE DE LOS SIGUIENTES HERRAJES, EN CASO DE LLEVARLOS:

- Bisagras de un solo Eje.
- Dispositivos de cierre controlado la puerta.
- Dispositivos de retención controlados eléctricamente.
- Sistemas de retención controlados electromagnéticamente.
- Dispositivos de coordinación de puerta.
- Manillas y pomos de Puertas.
- Cerraduras y picaportes mecánicos.
- Cilindros para cerraduras.
- Dispositivos para salida de emergencias.
- Dispositivos antipánicos.
- Cerraduras y cerraderos electromecánicos.
- Dispositivos para salidas de emergencia controlados eléctricamente.

• Sistemas antipánico controlados eléctricamente.

Inspector:	*Made in the presence of:*

Materials:
Rockwool - 5cm thickness
Expandable adhesive/glue
Frame - Galvanized metal sheet 1.6 mm thickness
Door hinges
Handle from both sides
Cylinder with thumb-turn on one side
Door closer
Intumescent seal
Door gasket

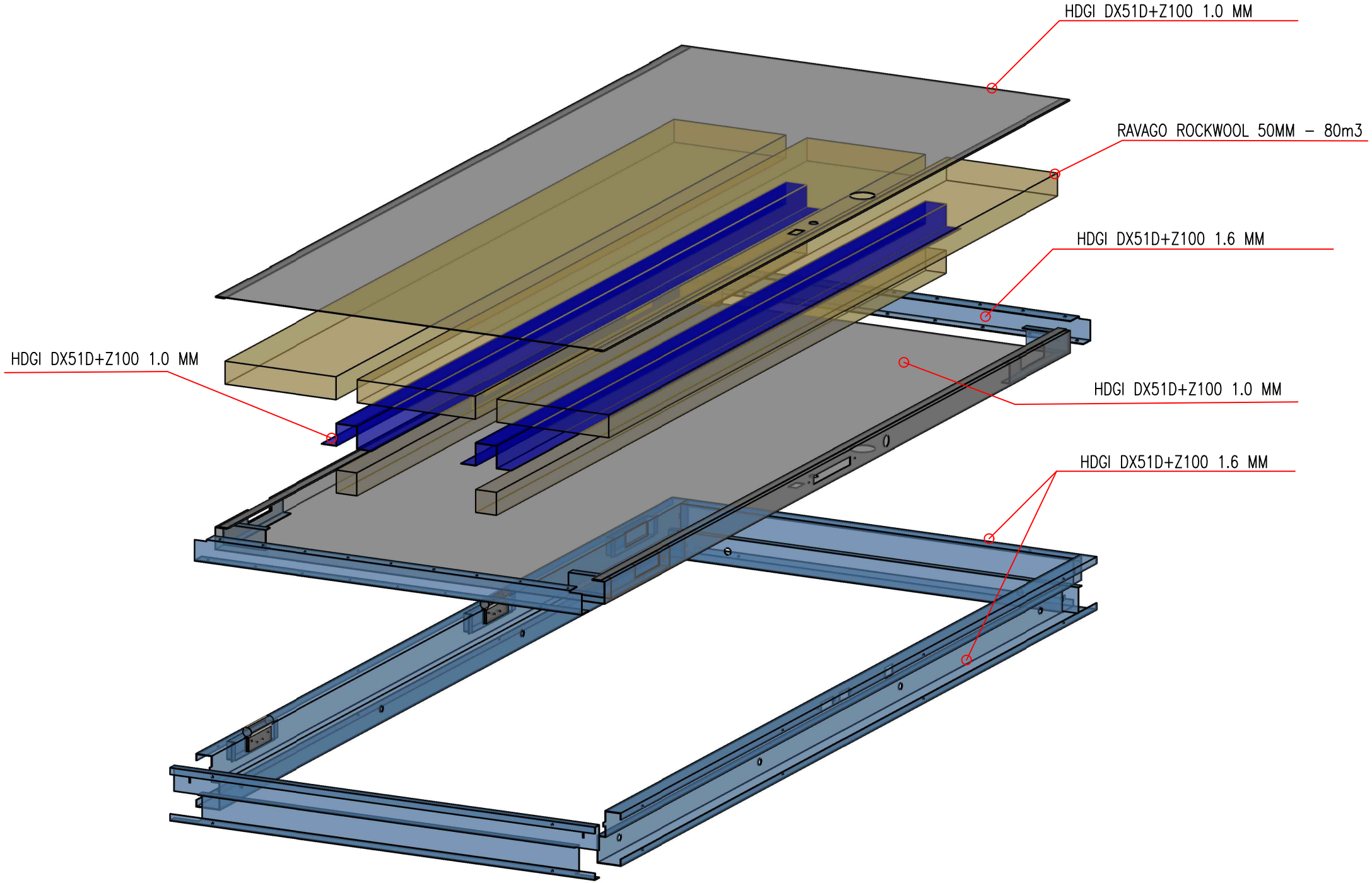
HDGI DX51D+Z100 1.0 MM
RAVAGO ROCKWOOL 50MM – 80m3
HDGI DX51D+Z100 1.6 MM
HDGI DX51D+Z100 1.0 MM
HDGI DX51D+Z100 1.0 MM
HDGI DX51D+Z100 1.6 MM

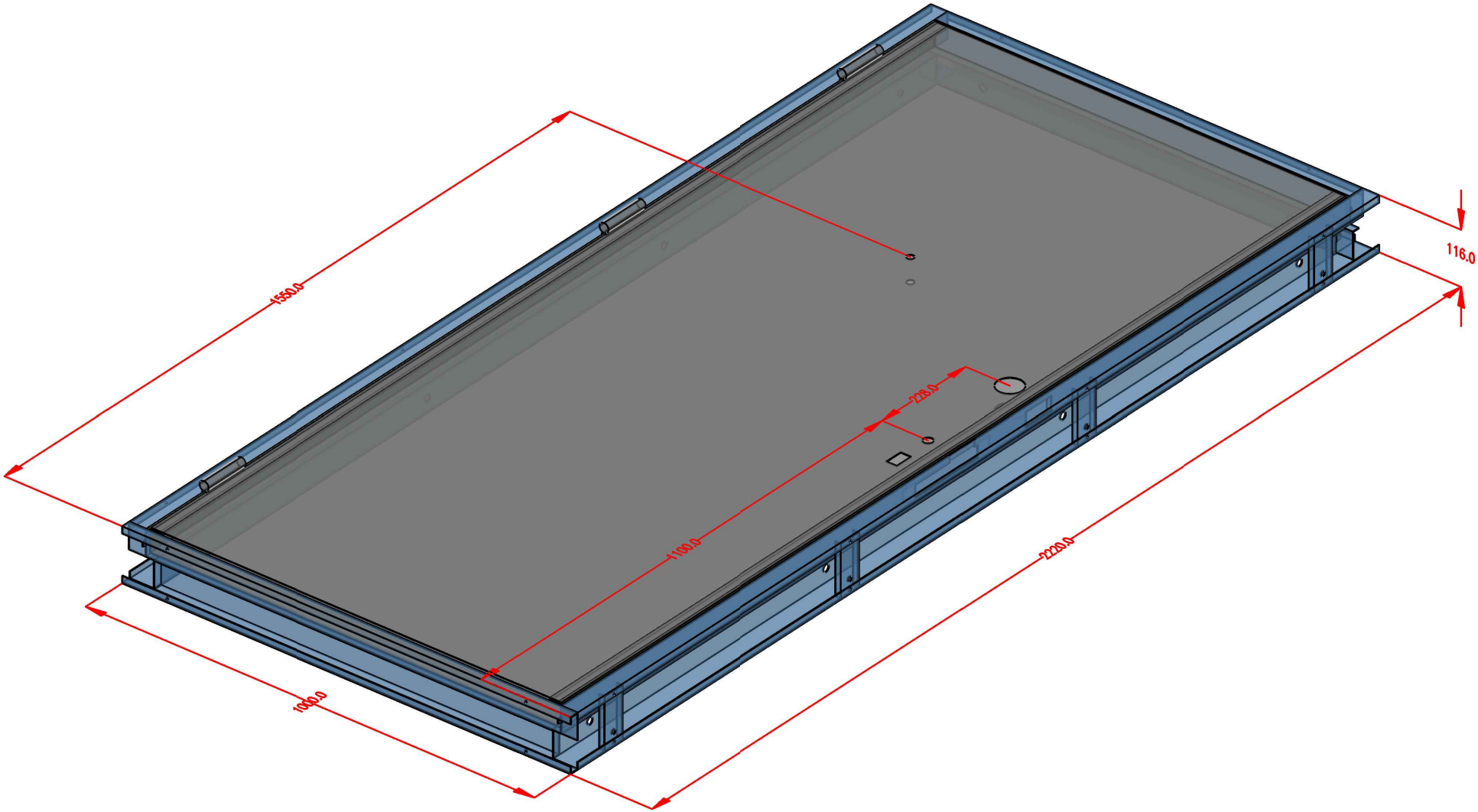
1550.0
116.0
228.0
1100.0
2220.0
1000.0

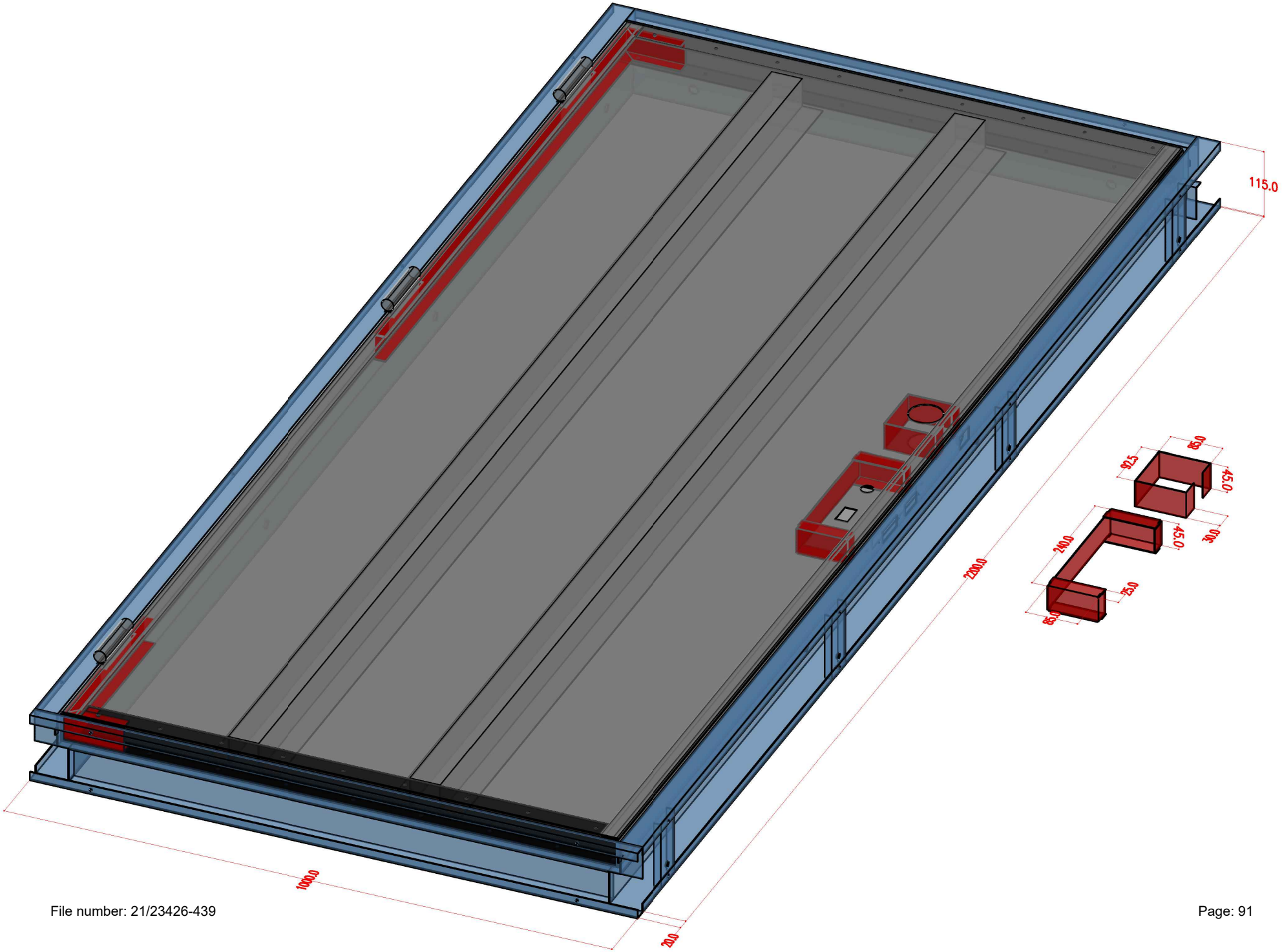
115.0
2000.0
1000.0
20.0
85.0
92.5
45.0
240.0
45.0
30.0
25.0
85.0

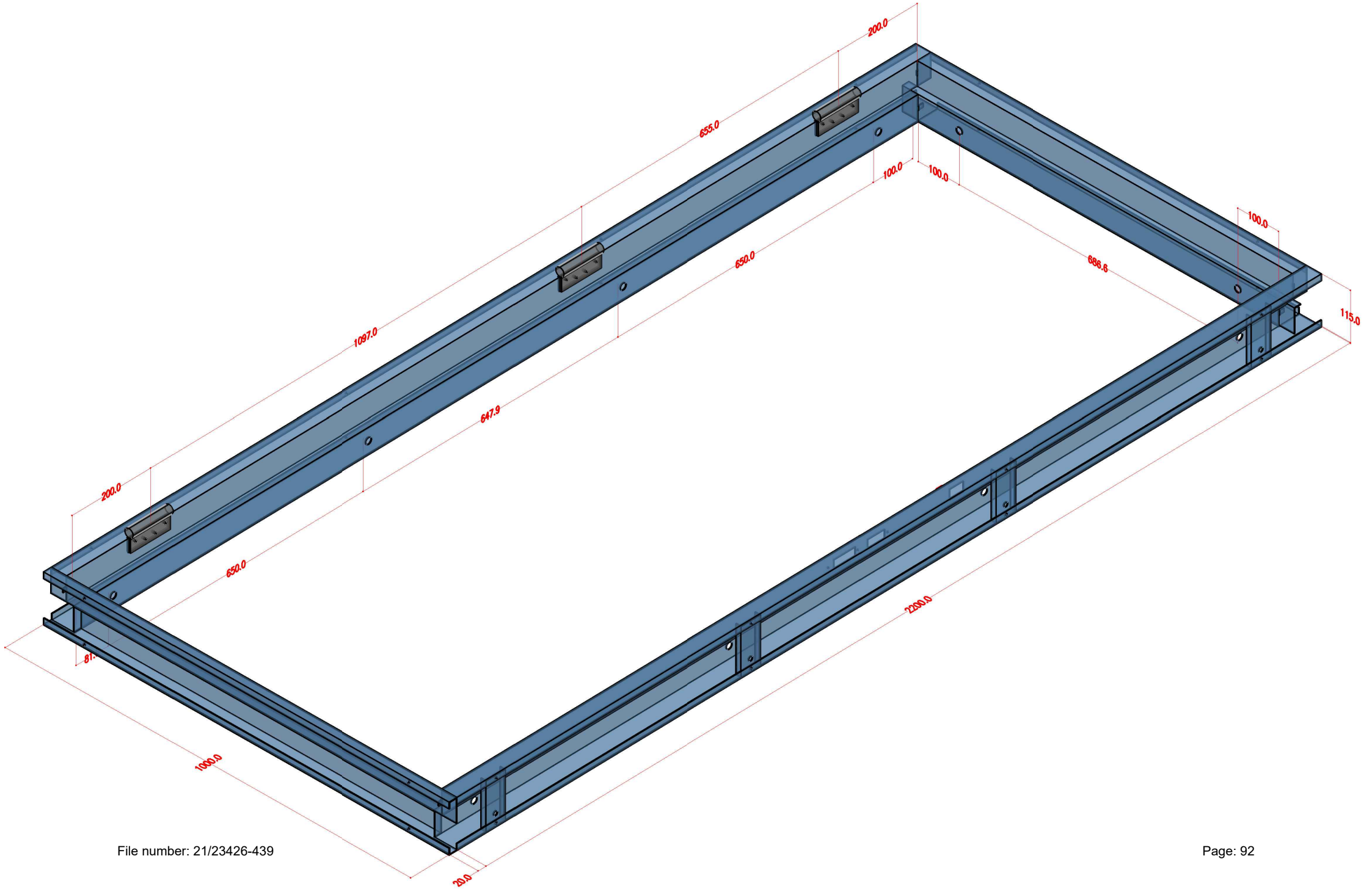
200.0
655.0
100.0
100.0
100.0
686.6
115.0
1097.0
650.0
647.9
200.0
650.0
2000.0
1000.0
20.0

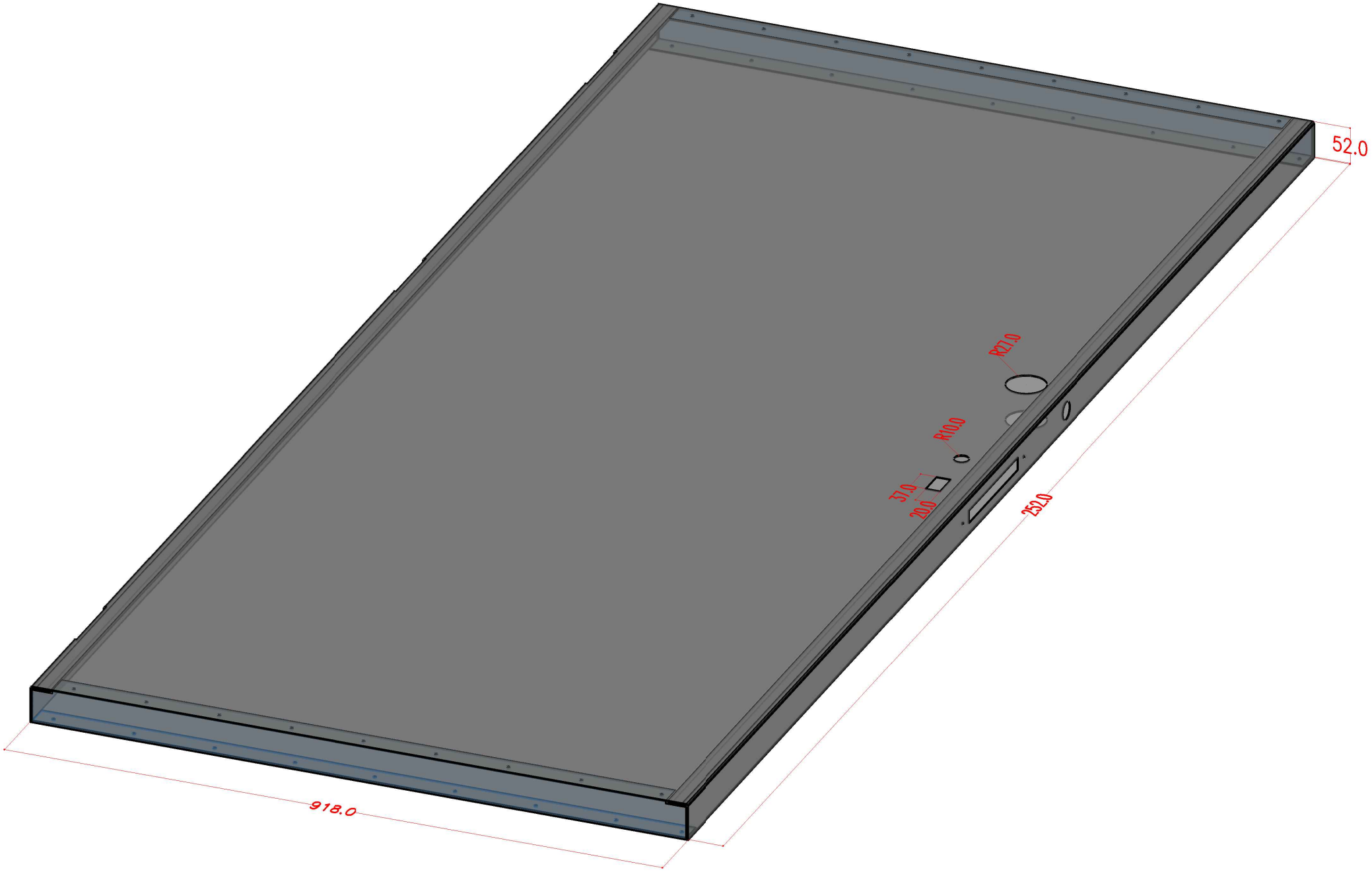
52.0
R27.0
R10.0
37.0
20.0
252.0
918.0

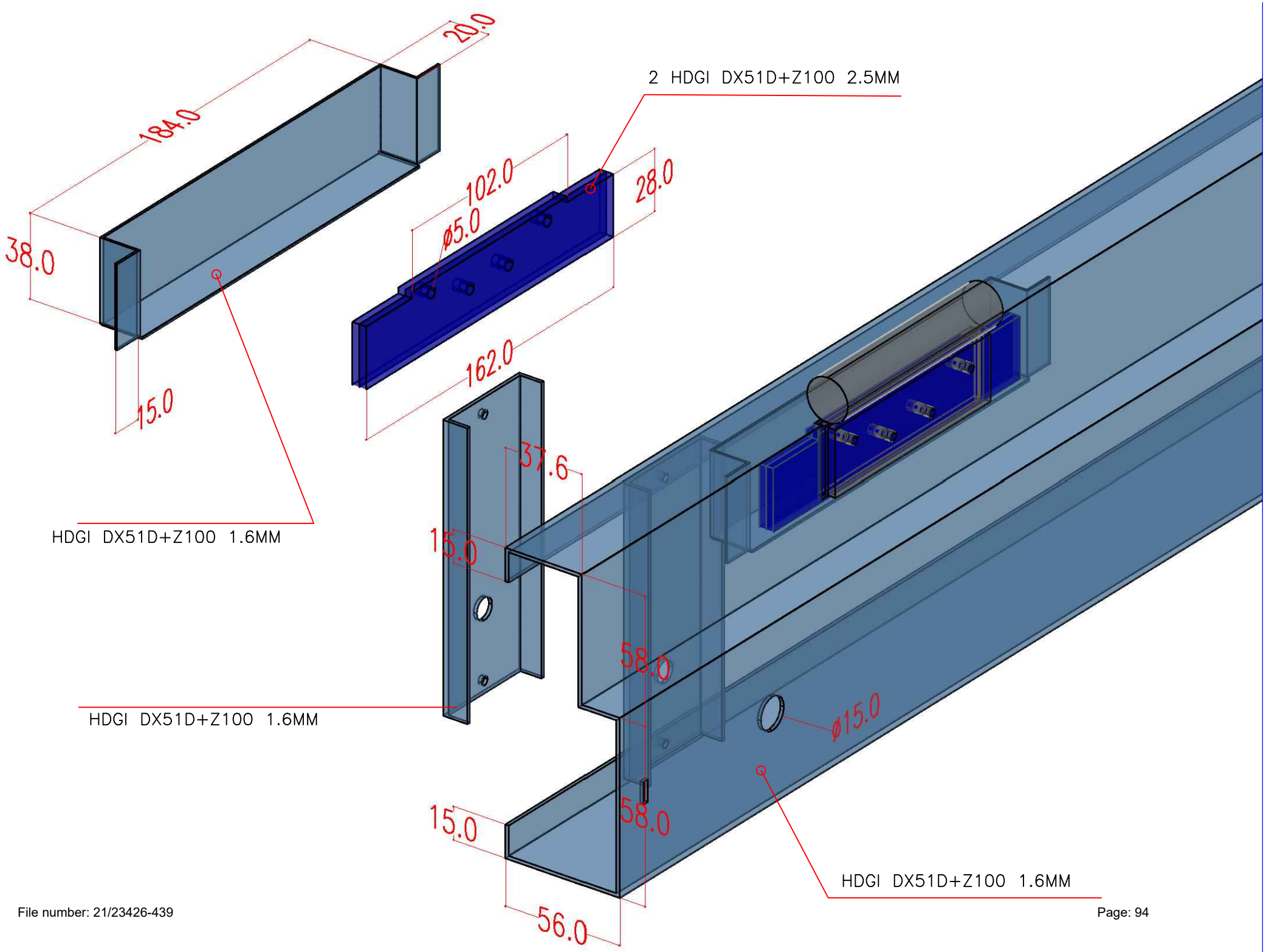
20.0
184.0
38.0
15.0
2 HDGI DX51D+Z100 2.5MM
102.0
ø5.0
28.0
162.0
HDGI DX51D+Z100 1.6MM
37.6
15.0
58.0
ø15.0
HDGI DX51D+Z100 1.6MM
15.0
58.0
56.0
HDGI DX51D+Z100 1.6MM

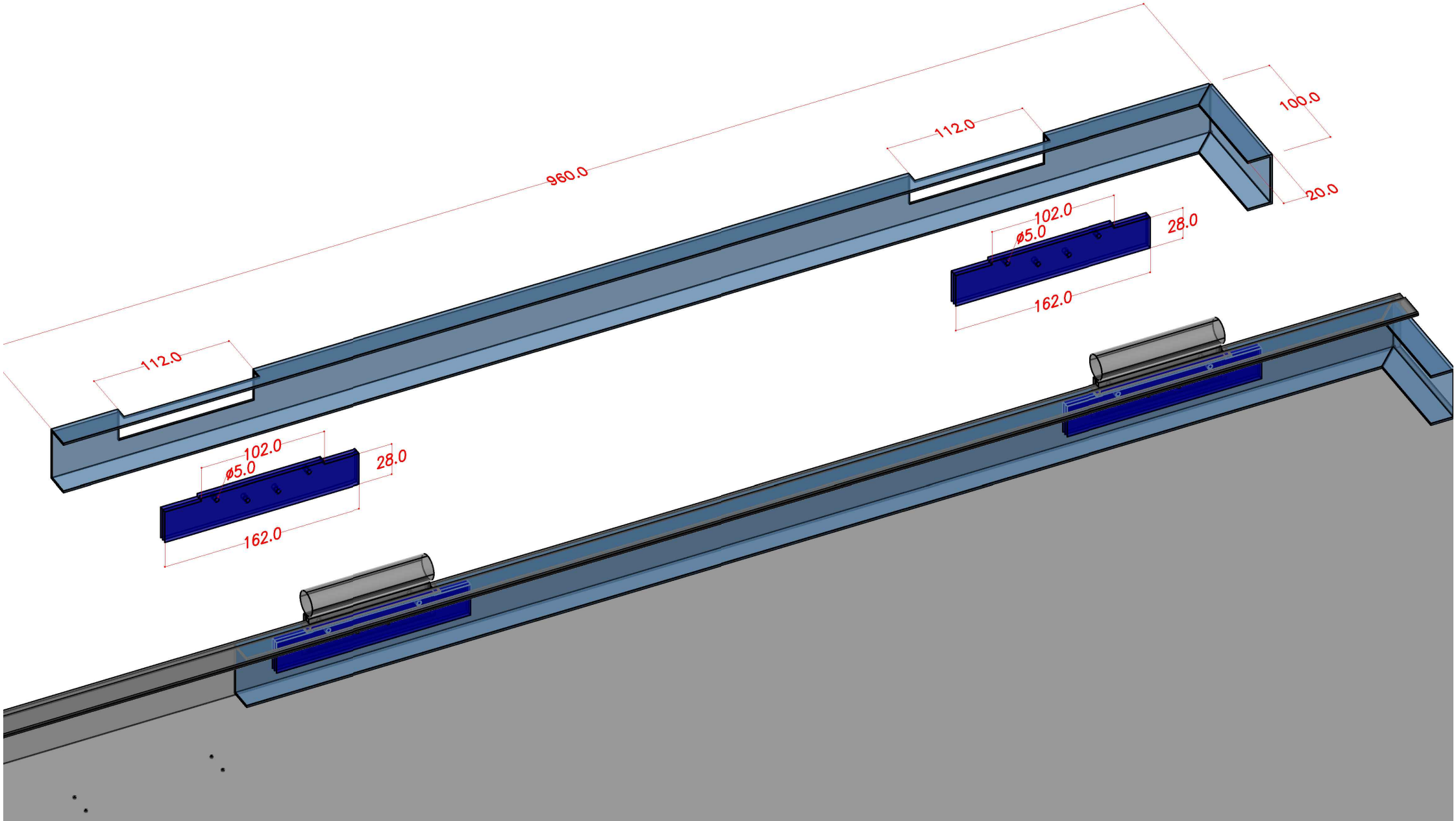
960.0
112.0
100.0
20.0
102.0
ø5.0
28.0
162.0
112.0
102.0
ø5.0
28.0
162.0

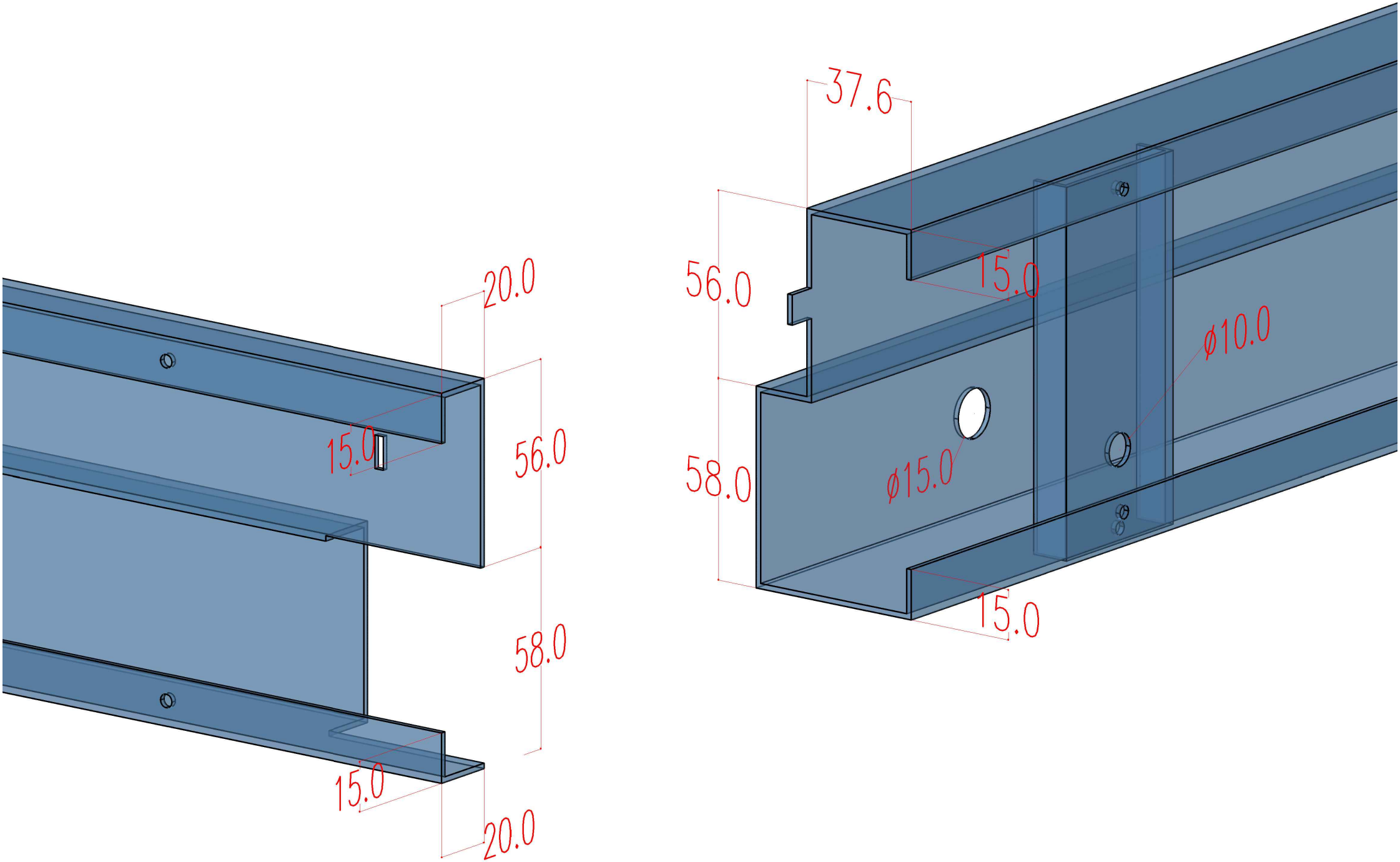
37.6
56.0
15.0
ø10.0
58.0
ø15.0
15.0
20.0
56.0
15.0
58.0
15.0
20.0

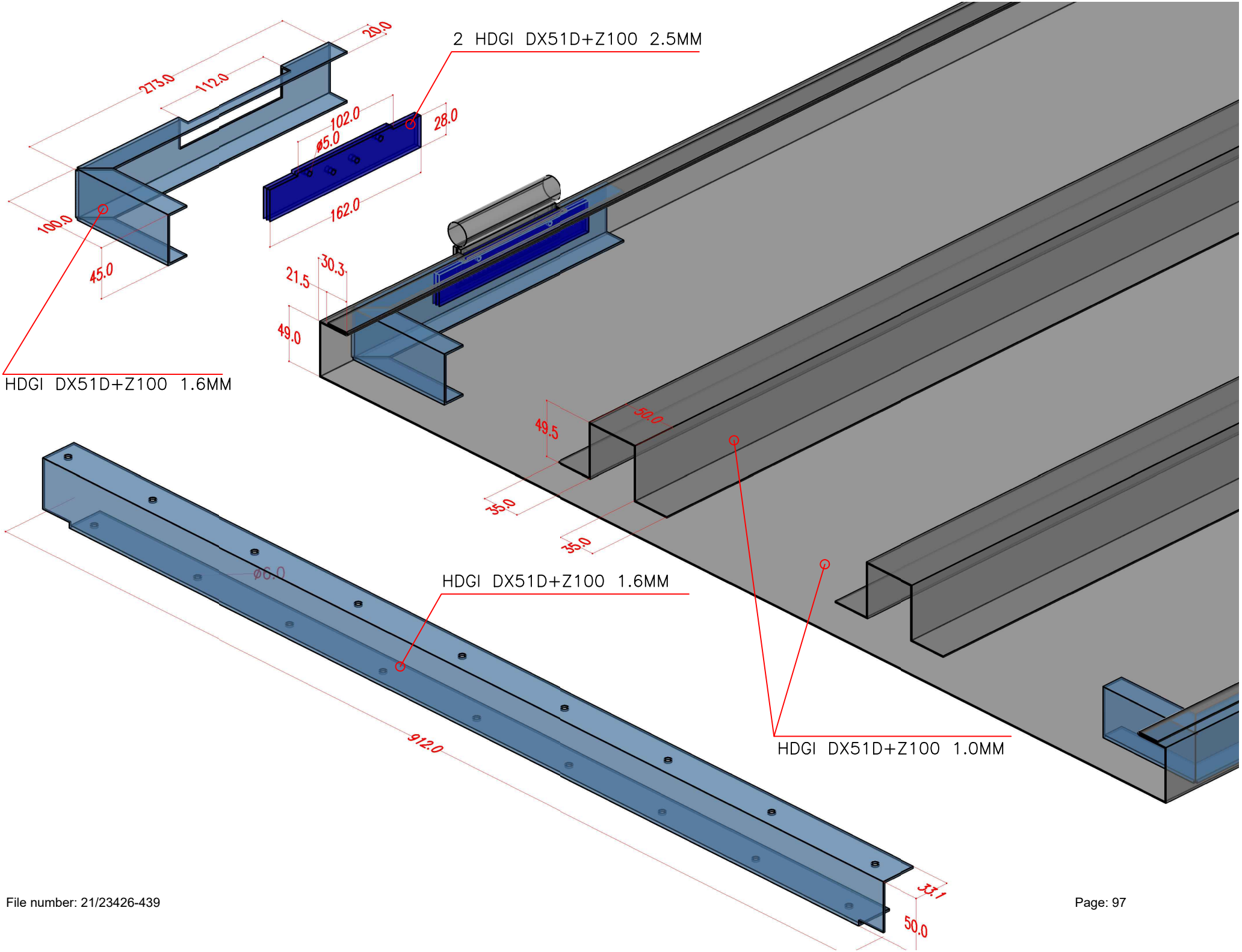
2 HDGI DX51D+Z100 2.5MM
HDGI DX51D+Z100 1.6MM
HDGI DX51D+Z100 1.6MM
HDGI DX51D+Z100 1.0MM
273.0
112.0
20.0
102.0
ø5.0
28.0
162.0
100.0
45.0
30.3
21.5
49.0
49.5
50.0
35.0
35.0
ø6.0
912.0
33.1
50.0

dormakaba

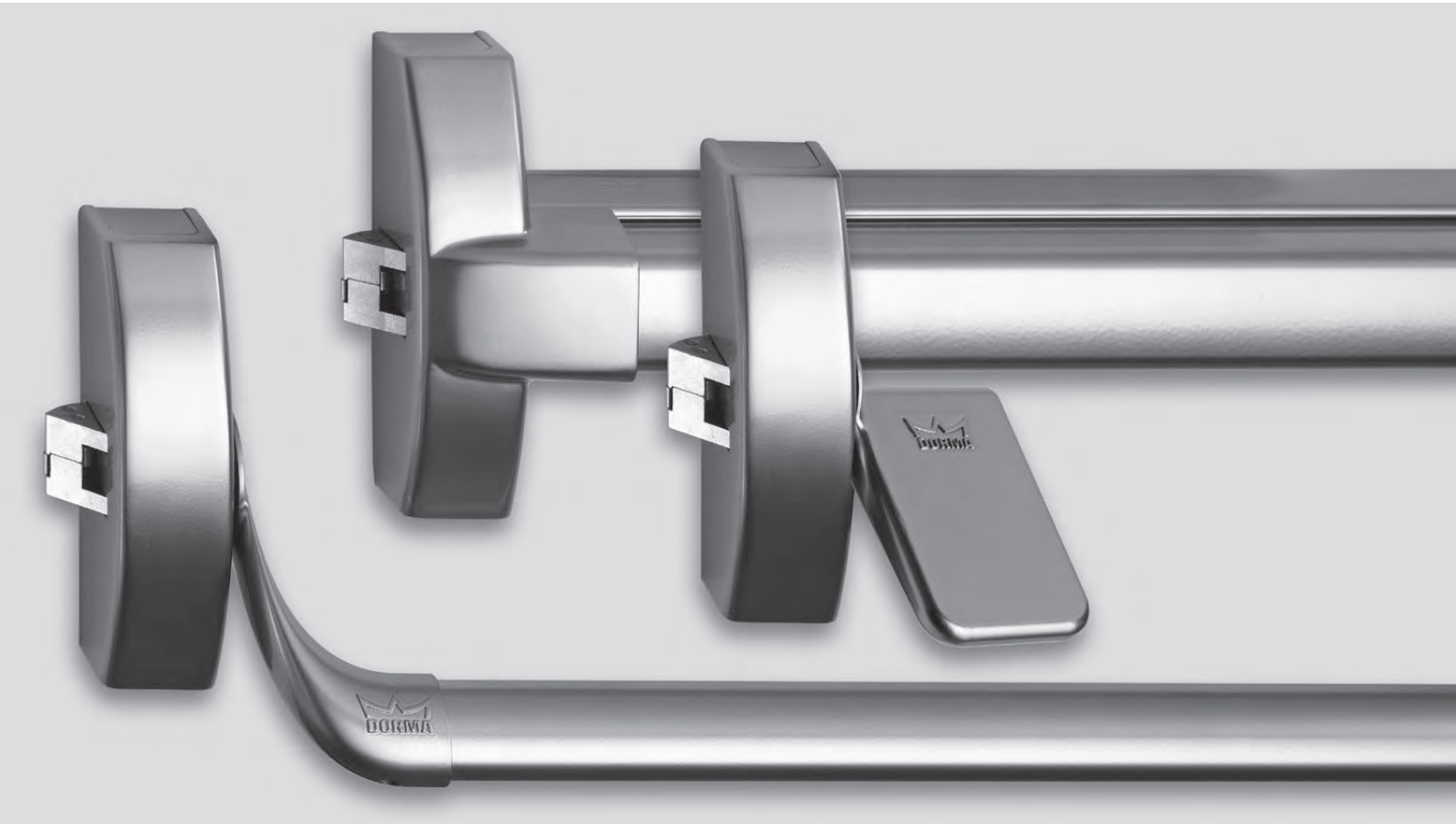

PHA 2000
PHB 3000
Exit Pad

Panic Hardware
in Contur Design

The modular dormakaba panic hardware-system in contur design

Prior knowledge of how to open the escape door is not expected.
DANGER OF PANIC

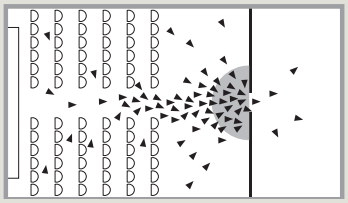

EN 1125
Panic exit devices operated by a horizontal bar

PHA 2000



PHB 3000



F Approval certification
The Panic Hardware products of the series PHA 2000 and PHB 3000 have been tested to and certified compliant with EN 1125. All products meet the requirements of Annex ZA to EN 1125 and are therefore qualified to bear the CE mark of conformity.

DORMA ESCAPE

Advanced, high-spec fittings for emergency exit doors

Prior knowledge of how to open the escape door is expected.

NO DANGER OF PANIC

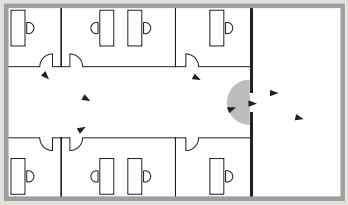

EN 179

Emergency escape devices with exit pad

With this system, dormakaba is able to offer a comprehensive range of high-quality panic hardware fittings with horizontal and vertical locking for doors in emergency exits and escape routes – applications in which safety, reliability and aesthetic attractiveness are indispensable requirements. dormakaba's PHA and PHB products cover in full the hardware requirements that arise in public-frequented facilities such as hospitals, universities and schools, concert halls, shopping malls, hotels and administrative buildings. Whether office suites or apartment blocks, in buildings where there is generally no public pedestrian traffic, the Exit Pad provides the ideal answer. For both series, the same external dormakaba PHT fittings are used.

Exit Pad



F Approval certification

The emergency exit devices of the Exit Pad series are tested to and certified compliant with EN 179. All products meet the requirements of Annex ZA to EN 179 and are therefore qualified to bear the CE mark of conformity.

Contents

PHA 2000/PHB 3000	Features and functions	4
PHA 2000	Dimensions	6
	Applications and fixing details	7
PHB 3000	Dimensions	8
	Applications and fixing details	9
PHA 2000/PHB 3000	Components	10
Exit Pad	Features and functions	16
	Dimensions	18
	Applications and fixing details	19
	Components	20
Glass Kit	Features and functions	22
	Applications and fixing details	23
	Components	28
PH Accessories	Applications and fixing details	30
	Components	32
PHT	External fittings	34

PHA 2000 / PHB 3000

Practical panic hardware for many door situations

With the series PHA 2000 crossbar and the series PHB 3000 pushbar combined with the universally applicable PHT external fittings, dormakaba is able to offer a range suitable not only for narrow-stile doors but also timber and similar full-face doors.

The wide security latchbolt engages in a keeper that is normally mounted on the frame. This ensures that the latch is extremely easy to mount and that the door is also securely locked.

Benefits

For the trade
- Modular system for reduced storage costs
- Non-handed
- Universal use of PHT external fittings

For the installer
- Straightforward fixing
- Easy adjustment to different door widths and heights

For the architect/specifier
- For horizontal and vertical panic lock mechanisms
- External fitting with dormakaba lever handle or knob
- Electrical functions for special applications

For the user
- Simple operation
- Excellent quality ensures long lifespan
- Universal electric strike

Data and features		PHA 2000			PHB 3000		
		1-point	2-point	3-point	1-point	2-point	3-point
Modular system		●	●	●	●	●	●
Standard (non-expandable)		–	●	–	●	–	–
Standard doors (single-leaf/double-leaf)		●	●	●	●	●	●
Fire and smoke check doors (single-leaf/double-leaf) F		●	●	●	●	●	●
Glass doors		●	●	●	–	–	–
Door width	≤ 1000 mm	●	●	●	●	●	●
	≤ 1300 mm	●	●	●	●	●	●
Door height	≤ 2270 mm	–	●	●	–	●	●
	≤ 3400 mm[1)]	–	●	●	–	●	●
Max. door leaf weight in kg		200	200	200	200	200	200
Non-handed design		●	●	●	●	●	●
Dogging device[2)]		●	●	●	●	●	●
Security anti-thrust latch	for standard doors	–	–	–	–	–	–
	for fire and smoke check doors	●	●	●	●	●	●
Unlocking via electric strike		○	○	○	○	○	○
Monitoring switch on actuating bar		○	○	○	○	○	○
PHT external fittings For standard doors and fire and smoke check doors For door leaf thicknesses up to 60 mm		●	●	●	●	●	●
Extended handle spindle and bolts for door leaf thicknesses of 60 – 105 mm		○	○	○	○	○	○
Approved to EN 1125		●	●	●	●	●	●
CE mark for construction products		●	●	●	●	●	●

● yes – no ○ Option

[1)] Doors higher than 2500 mm lie outside the scope of EN 1125.
[2)] Not for Fire and smoke check doors.

F Approval certification
The panic hardware products marked with an F are approved for use with fire and smoke check doors. Approval certification for the fire and smoke check door in conjunction with the dormakaba panic hardware product is additionally required in some countries – check local regulations.

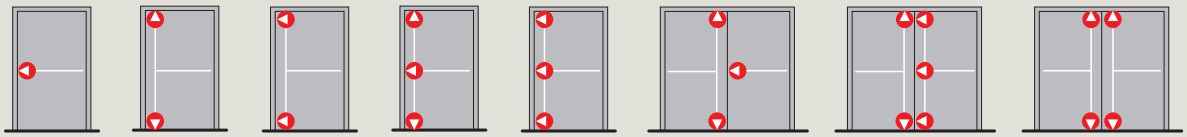

The modular panic hardware system

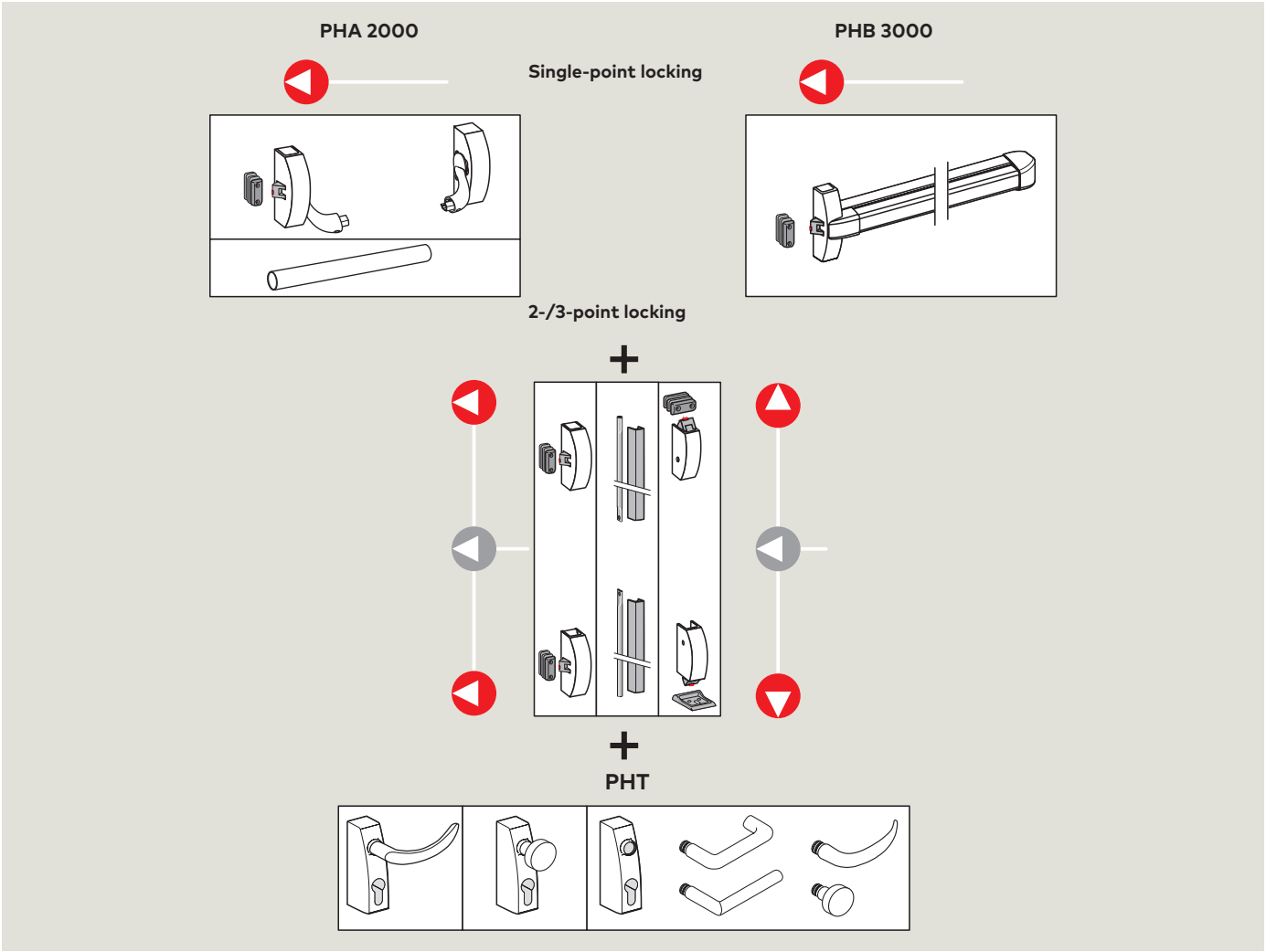

Security anti-thrust latch

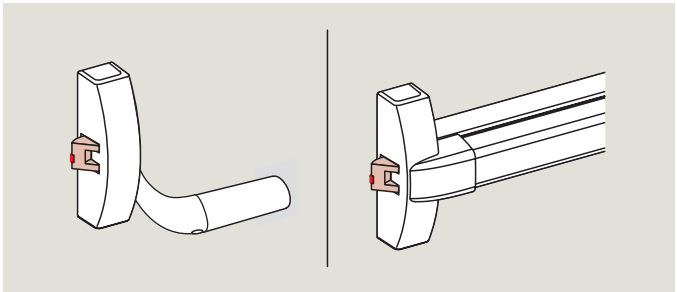

The security anti-thrust latch prevents the latch from being pushed back by unauthorised means when it is in the closed position.

Dogging device

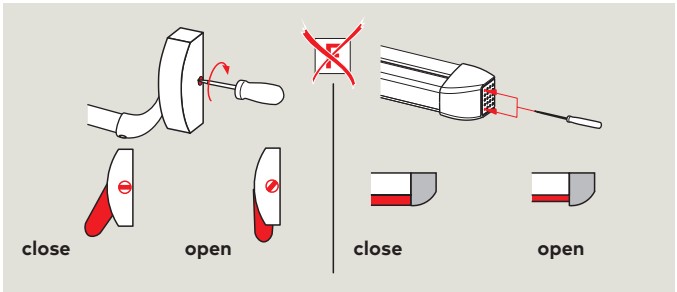

The dogging device serves to hold the latch in its retracted position so the door is freely accessible.

PHA 2000

Single-point locking

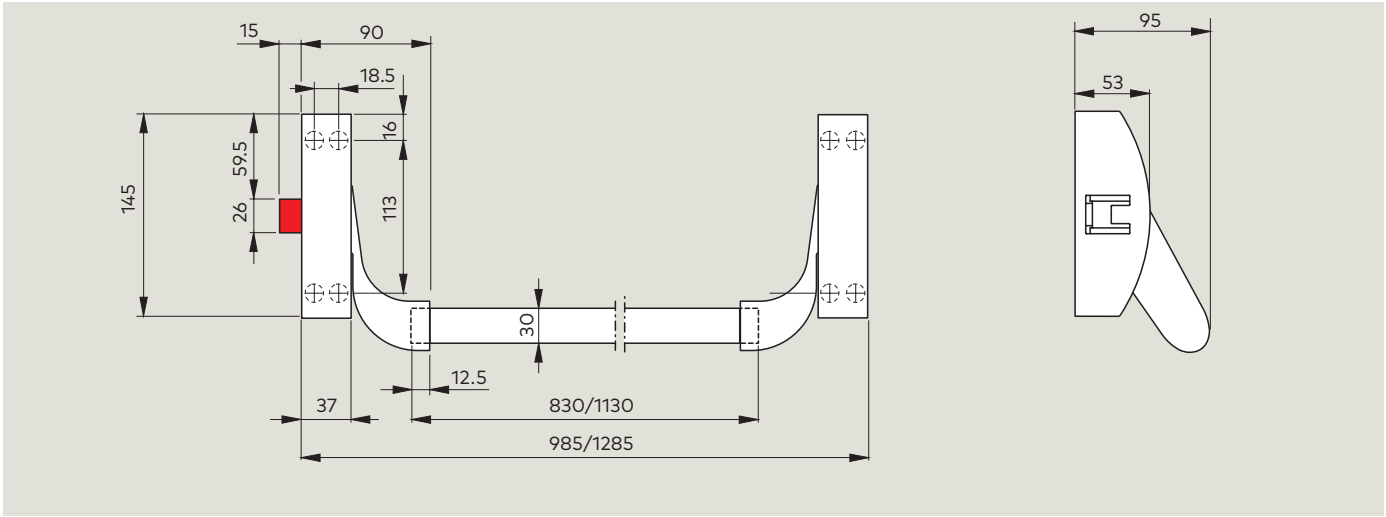

2/3-point locking

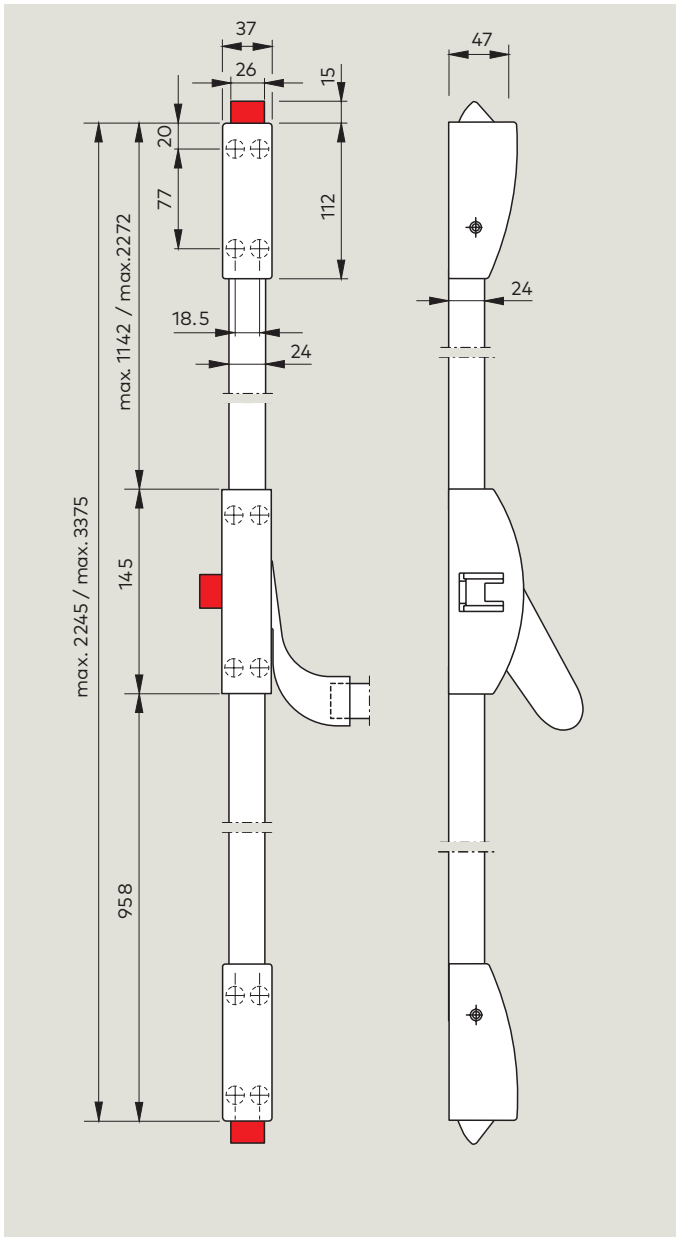

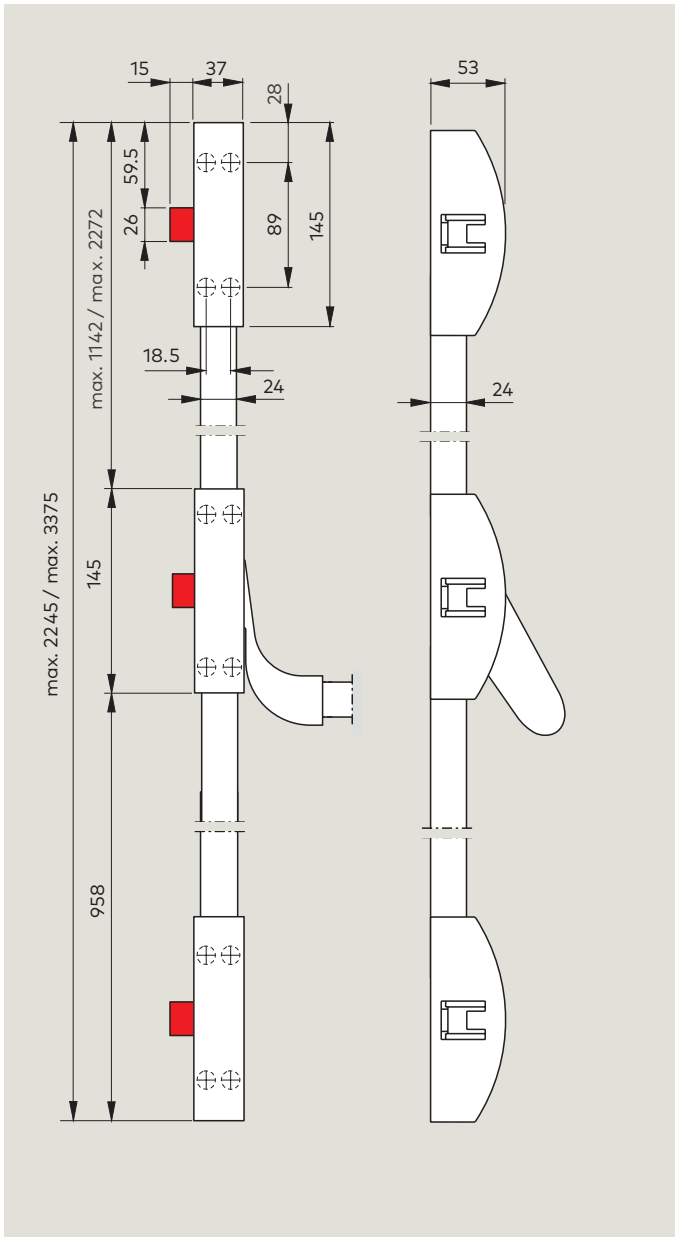

Applications and fixing details

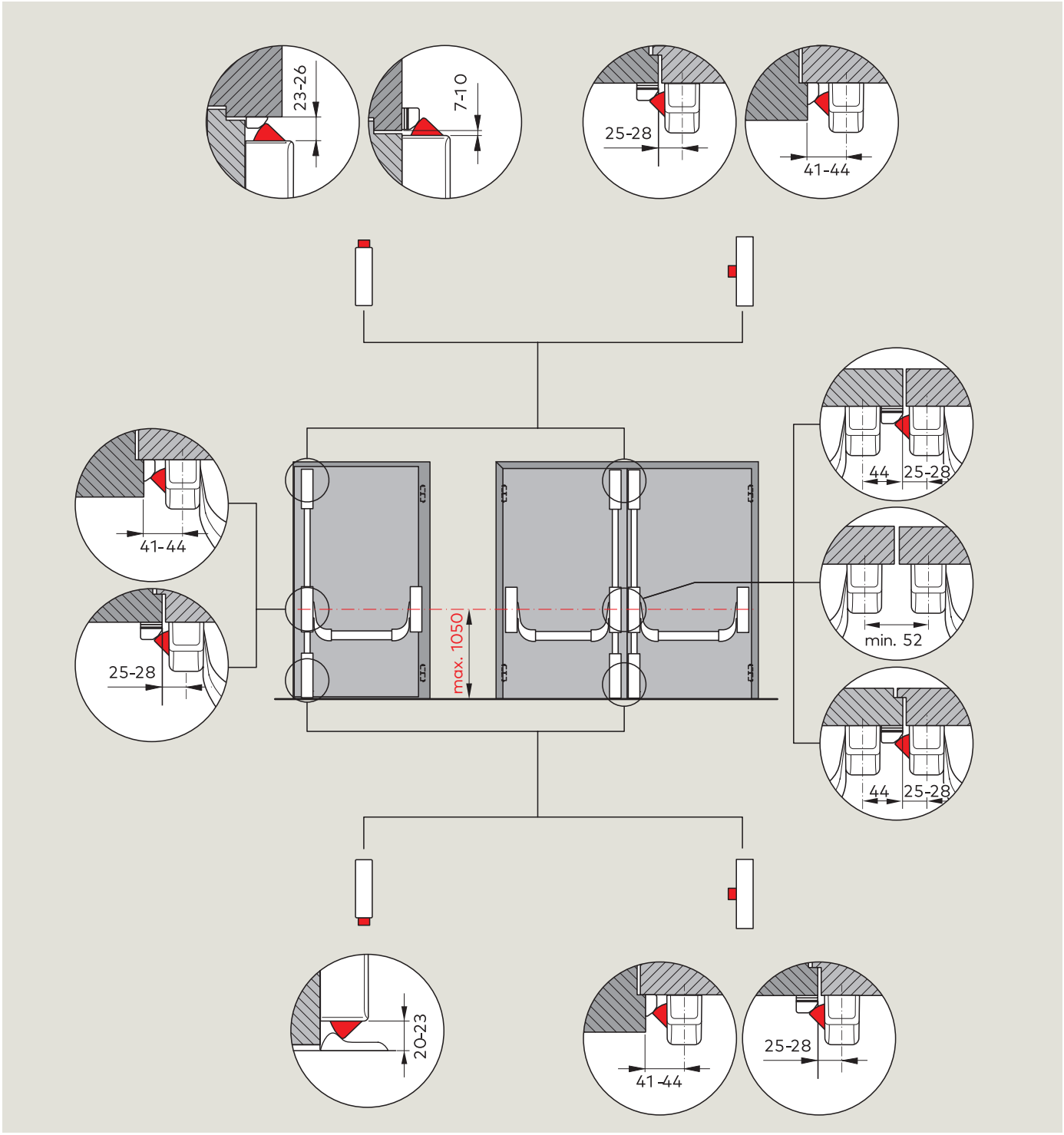

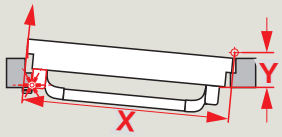

Note

It may be the case that the exit device cannot be installed based on standard measurements where the door situation is extreme, e.g. with a door width X < 1000 mm combined with a hinge offset Y > 90 mm.

dormakaba will be glad to provide you with installation suggestions on request.

PHB 3000

Single-point locking

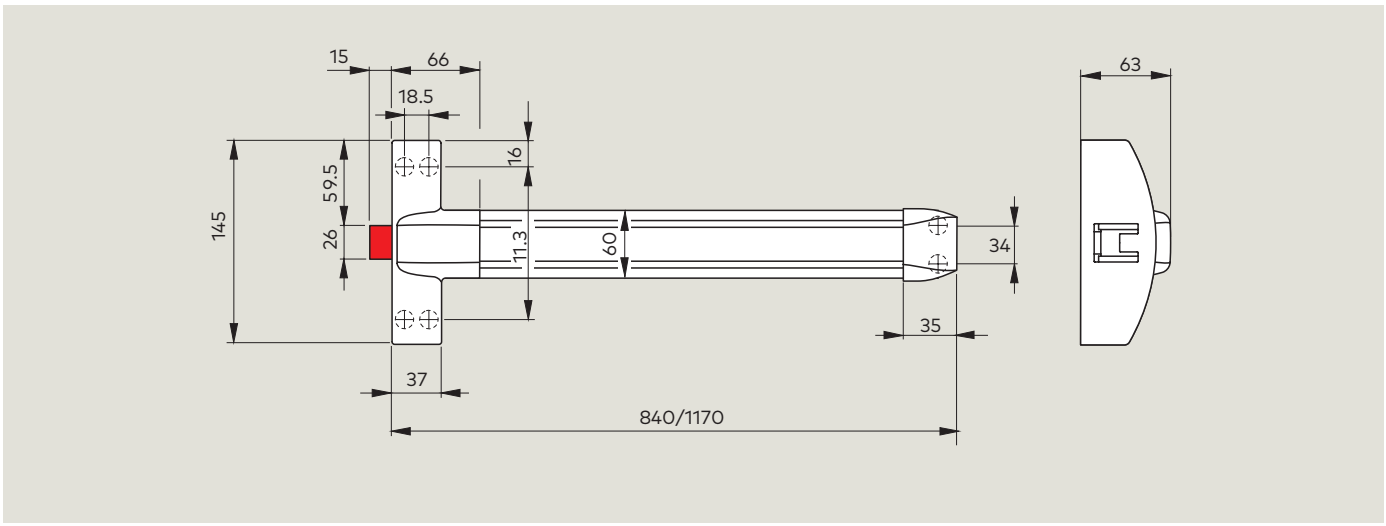

2/3-point locking

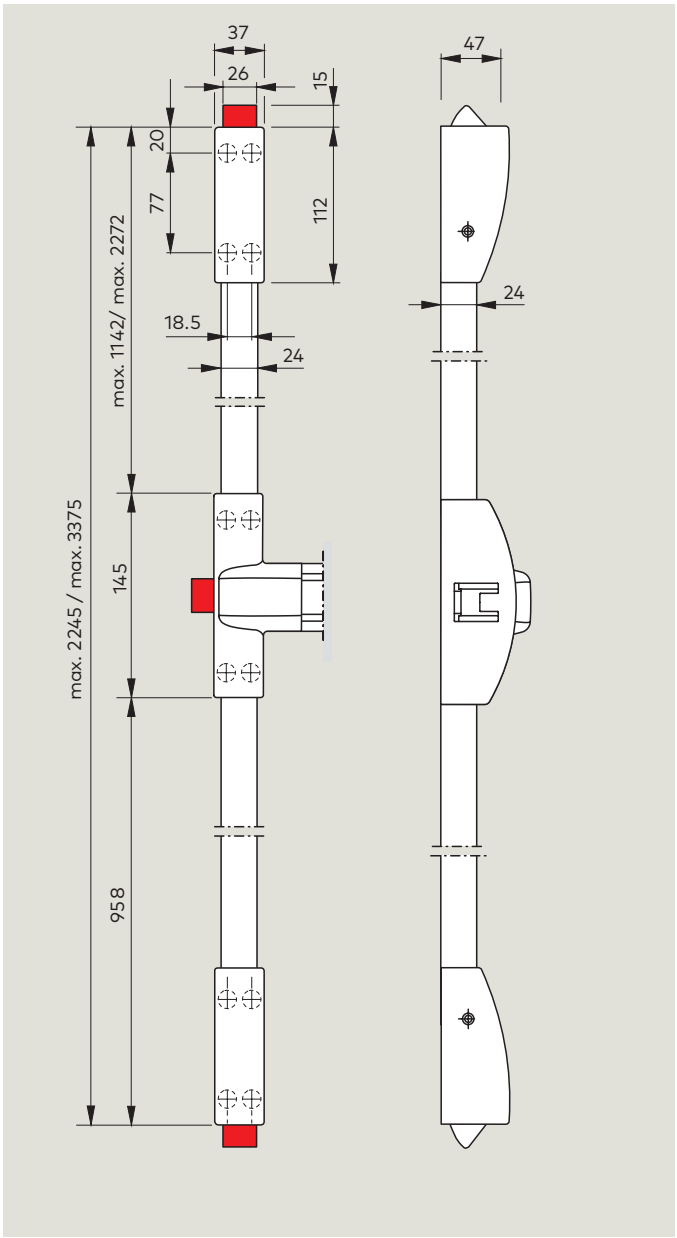

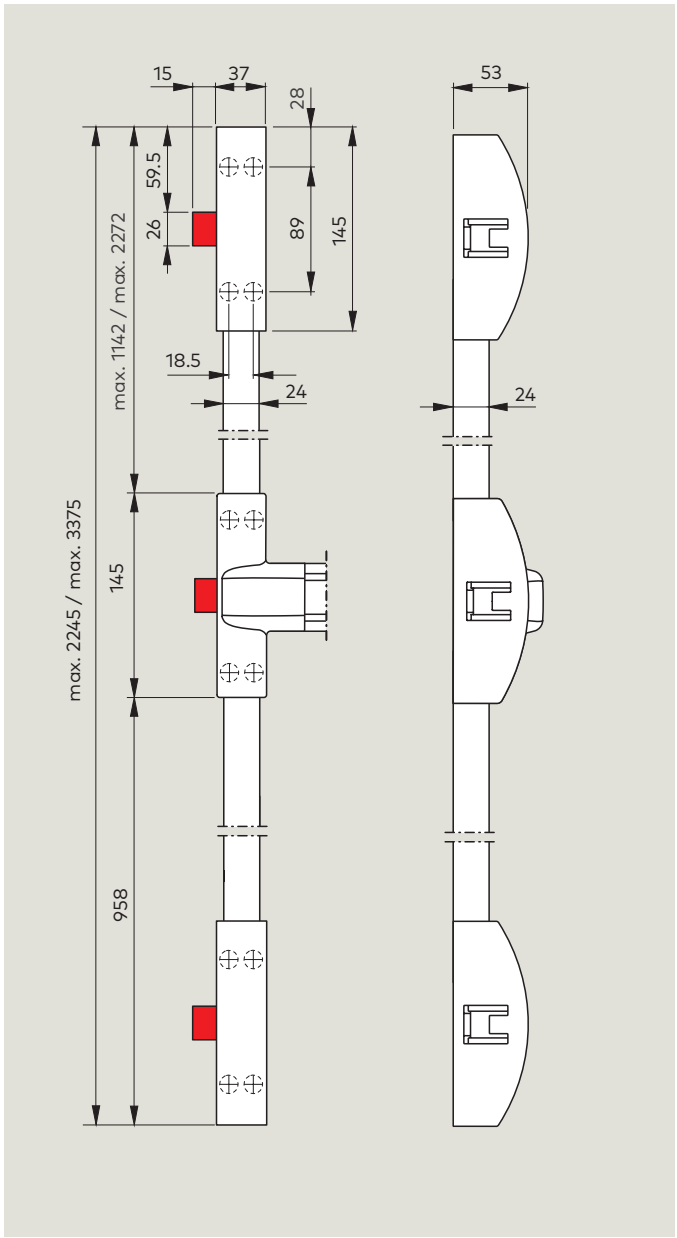

Applications and fixing details

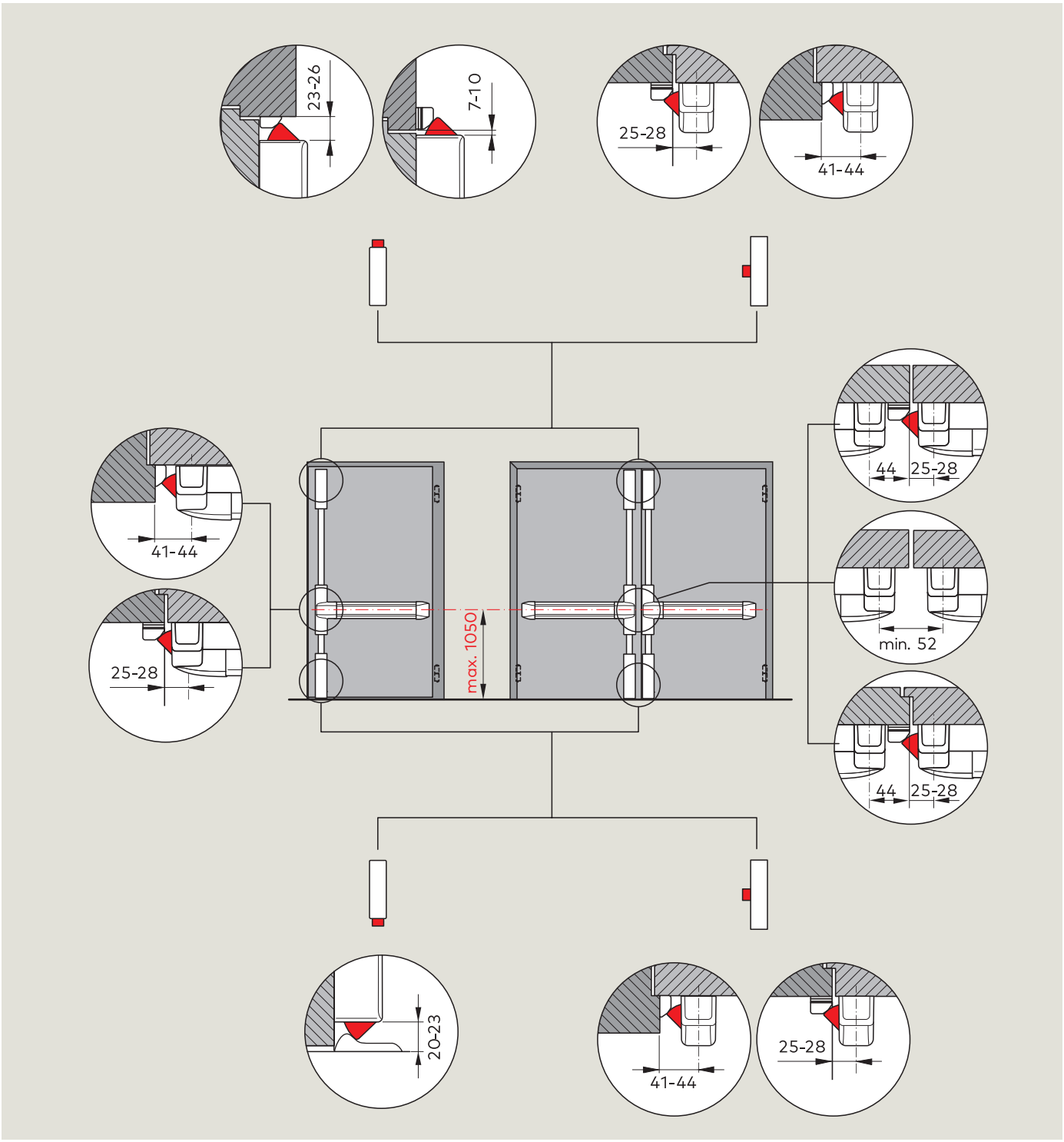

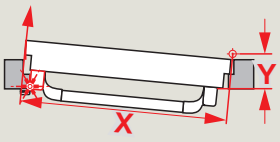

Note

It may be the case that the exit device cannot be installed based on standard measurements where the door situation is extreme, e.g. with a door width X < 1000 mm combined with a hinge offset Y > 90 mm.
dormakaba will be glad to provide you with installation suggestions on request.

PHA 2000 / PHB 3000

Components on single-leaf doors

				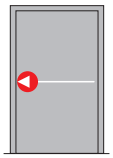	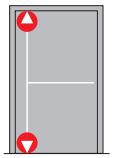	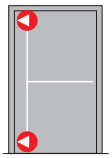	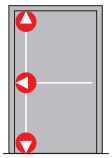	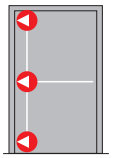
Standard doors	Modular		2101	●	●	●	●	●
	Standard		2201		○	○		
			2104/05	●	●	●	●	●
	Modular	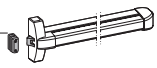	3102/03	●	●	●	●	●
	Standard		3101	○				
			PHX 04/05		●	●	●	●
			PHX 02		●		●	
			PHX 06			●		●
Fire and smoke check doors	Modular		2102	●	●	●	●	●
F	Standard		2201		○	○		
			2104/05	●	●	●	●	●
	Modular		3104/05	●	●	●	●	●
			PHX 04/05		●	●	●	●
			PHX 03		●		●	
			PHX 07			●		●

● yes ○ Option

For external fittings, see page 34

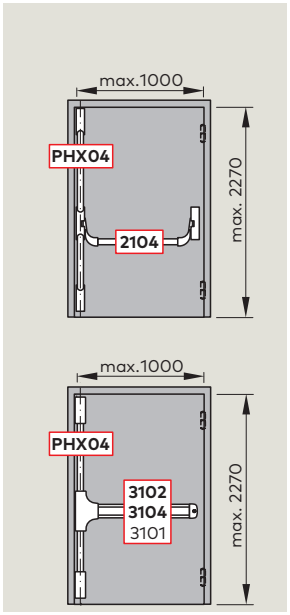

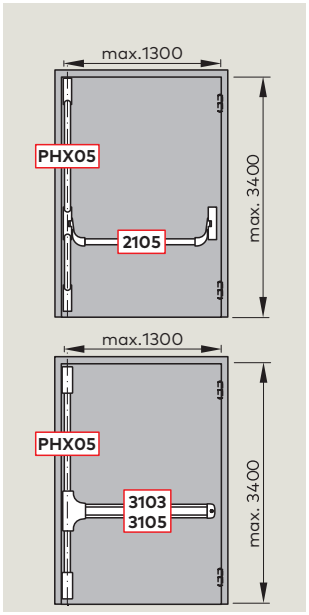

F Approval certification

The panic hardware products of the series PHA 2000/PHB 3000 in the Contur design marked with the F symbol have been approved for use on fire and smoke check doors.
In some countries, approval certification of the fire and smoke check doors to be used is additionally required.

The panic hardware products of the series PHA 2000/PHB 3000 in the Contur design carry the CE mark of conformity.

Components on double-leaf doors				Over-rebated door				Flush closing door	
				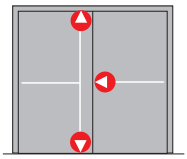		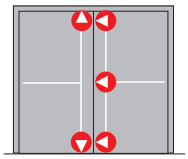		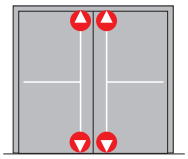	
				Inactive leaf	Active leaf	Inactive leaf	Active leaf	Inactive leaf	Active leaf
Standard doors	Modular		2101	●	●	●	●	●	●
	Standard		2201	○		○		○	○
			2104/05	●	●	●	●	●	●
	Modular	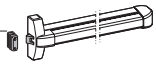	3102/03	●	●	●	●	●	●
	Standard		3101		○				
			PHX 04/05	●		●	●	●	●
			PHX 02	●		●		●	●
			PHX 06				●		
Fire and smoke check doors F	Modular		2102	●	●	●	●	●	●
	Standard		2201	○		○		○	○
			2104/05	●	●	●	●	●	●
	Modular		3104/05	●	●	●	●	●	●
			PHX 04/05	●		●	●	●	●
			PHX 03	●		●		●	●
			PHX 07				●		

● yes ○ Option

For external fittings, see page 34

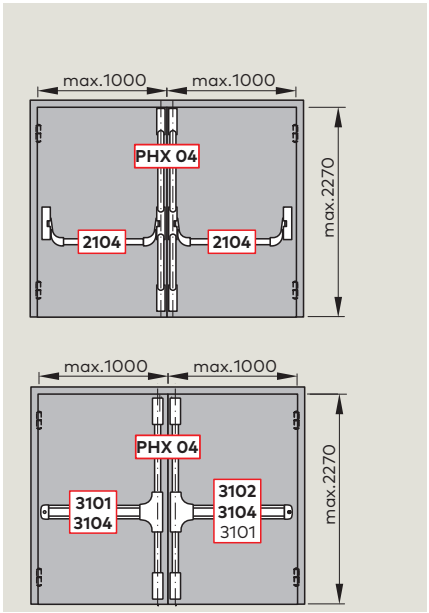

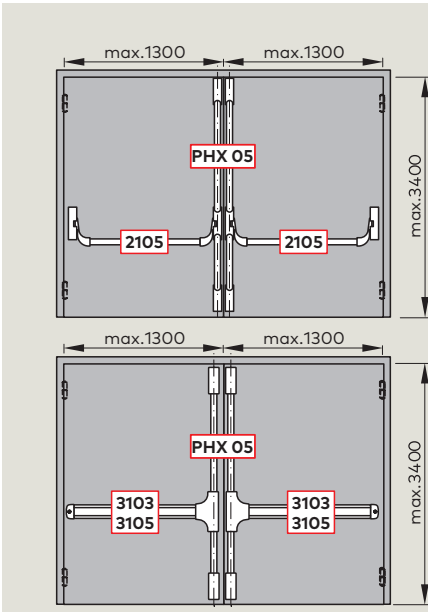

Note

According to EN 1125, the effective length of the operating bar has to be at least 60% of the door width.
Doors higher than 2500 mm lie outside the scope of EN 1125.

PHA 2000

	Specification text	Order No.
	PHA 2000 Panic exit device tested in accordance with EN 1125, for door widths up to 1300 mm, door heights up to 2270 (in accordance with EN 1125) or 3400 mm; non-handed. Can be unlocked electrically via electric strike. All products of the PHA 2000 series carry the CE mark.	
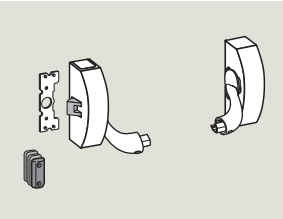	**PHA 2101** Single-point locking, modular, for standard doors, without security anti-thrust latch, with dogging device. Zinc die-cast latch, zinc latch keeper with spacer plates, plastic mounting backplate.	
	☐ silver finish	35014 21011001
	☐ black	35014 21011002
	☐ white	35014 21011010
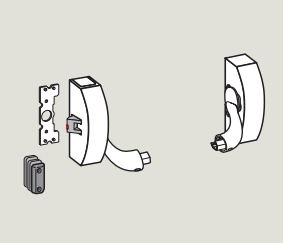	**PHA 2102** F Single-point locking, modular, for fire and smoke check doors, with security anti-thrust latch and dogging device. Steel latch, steel latch keeper with spacer plates, plastic mounting backplate.	
	☐ silver finish	35014 21021001
	☐ black	35014 21021002
	☐ white	35014 21021010
	☐ stainless steel finish	35014 21021004
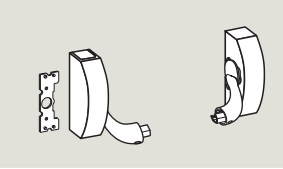	**PHA 2201** Two-point locking only, with dogging device. Plastic mounting backplate.	
	☐ silver finish	35014 22011001
	☐ black	35014 22011002
	☐ white	35014 22011010
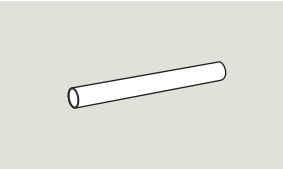	**PHA 2104** Connecting rod 830 mm (for door widths up to 1000 mm)	
	☐ silver finish	35014 21040001
	☐ red	35014 21040002
	☐ black	35014 21040019
	☐ white	35014 21040010
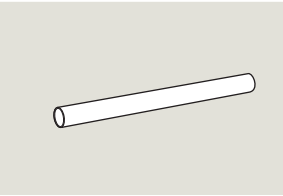	**PHA 2105** Connecting rod 1130 mm (for door widths up to 1300 mm)	
	☐ silver finish	35014 21050001
	☐ rot	35014 21050002
	☐ black	35014 21050019
	☐ white	35014 21050010
	☐ stainless steel finish	35014 21050004

See page 30 for accessories such as adjustable keepers,
electric strikes or micro switches for signal actuation.

PHB 3000

	Specification text	Order No.
	PHA 3000 Panic exit device tested in accordance with EN 1125, for door widths up to 1300 mm, door heights up to 2270 mm (in accordance with EN 1125) or 3400 mm, non-handed. Can be unlocked electrically via electric strike. All products of the PHB 3000 series carry the CE mark.	
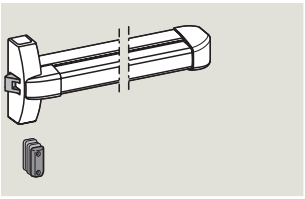	**PHB 3101** Single-point locking, standard, for standard doors with a door width up to 1000 mm, without security anti-thrust latch, with dogging device. Zinc die-cast latch, steel latch keeper with spacer plates.	
	☐ silver finish	35014 31011001
	☐ white	35014 31011010
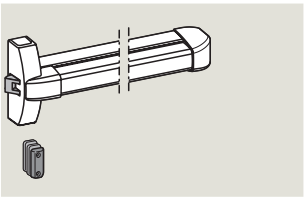	**PHB 3102** Single-point locking, modular, for standard doors with a door width up to 1000 mm, without security anti-thrust latch, with dogging device. Zinc die-cast latch, steel latch keeper with spacer plates.	
	☐ silver finish	35014 31021001
	☐ white	35014 31021010
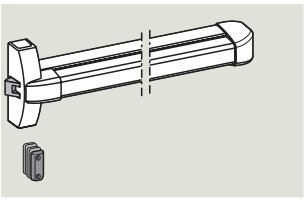	**PHB 3103** Single-point locking, modular, for standard doors with a door width up to 1300 mm, without security anti-thrust latch, with dogging device. Zinc die-cast latch, steel latch keeper with spacer plates.	
	☐ silver finish	35014 31031001
	☐ white	35014 31031010
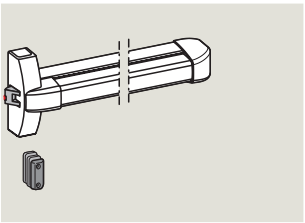	**PHB 3104** F Single-point locking, modular, for fire and smoke check doors with a door width up to 1000 mm, with security anti-thrust latch and dogging device. Steel latch, steel latch keeper with spacer plates.	
	☐ silver finish	35014 31041001
	☐ white	35014 31041010
	☐ stainless steel finish	35014 31041004
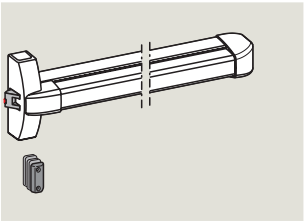	**PHB 3105** F Single-point locking, modular, for fire and smoke check doors with a door width up to 1300 mm, with security anti-thrust latch and dogging device. Steel latch, steel latch keeper with spacer plates.	
	☐ silver finish	35014 31051001
	☐ white	35014 31051010
	☐ stainless steel finish	35014 31051004

PHA 2000 / PHB 3000

	Specification text	Order No.
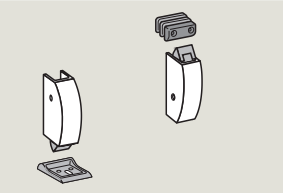	**PHX 02** Top and bottom lock combination, without security anti-thrust latch. Zinc die-cast latch, zinc top latch keeper with spacer plates, steel bottom latch keeper.	
	☐ silver finish	35014 22021001
	☐ black	35014 22021002
	☐ white	35014 22021010
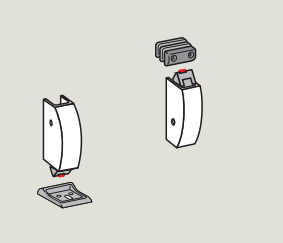	**PHX 03** F Top and bottom lock combination, for fire and smoke check doors, with security anti-thrust latch. Steel latch, steel top latch keeper with spacer plates, steel bottom latch keeper.	
	☐ silver finish	35014 22031001
	☐ black	35014 22031002
	☐ white	35014 22031010
	☐ stainless steel finish	35014 22031004
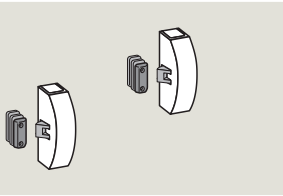	**PHX 06** Top and bottom locking combination with lateral latch, without security anti-thrust latch. Die-cast zinc latch, steel latch keepers with spacer plates.	
	☐ silver finish	35014 22061001
	☐ black	35014 22061002
	☐ white	35014 22061010
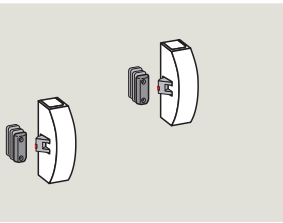	**PHX 07** F Top and bottom locking combination with lateral latch, for fire and smoke check doors, with security anti-thrust latch. Steel latch, steel latch keepers with spacer plates.	
	☐ silver finish	35014 22071001
	☐ black	35014 22071002
	☐ white	35014 22071010
	☐ stainless steel finish	35014 22071004

	Specification text	Order No.

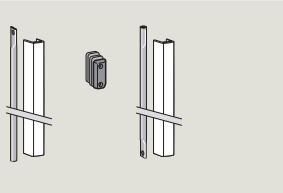

PHX 04 F

Connecting rod set with cover for door heights up to 2270 mm.
Steel latch keeper with spacer plates for double doors.

☐	silver finish	35014 22041001
☐	black	35014 22041002
☐	white	35014 22041010
☐	stainless steel finish	35014 22041004

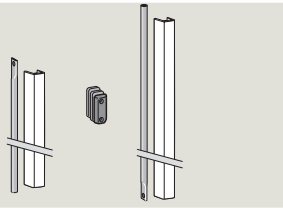

PHX 05 F

Connecting rod set with cover for door heights up to 3400 mm.
Steel latch keeper with spacer plates for double doors.

☐	silver finish	35014 22051001
☐	black	35014 22051002
☐	white	35014 22051010
☐	stainless steel finish	35014 22051004

Exit Pad – Emergency exits protected in accordance with EN 179

The fittings of the Exit Pad series are high-quality emergency exit devices for doors in escape routes and can be combined with the components of the PHA 2000/PHB 3000 series. They are used in buildings with no public pedestrian traffic.

It is expected that people using the building are familiar with the exits and their fittings, avoiding the likelihood of a panic situation developing.
All products of the Exit Pad series have been tested to and certified compliant with EN 179. They correspond to the requirements of Annex ZA to EN 179 and can therefore carry the CE mark of conformity.

Benefits

For the trade
- All-in-one packaging for easy stocking
- Non-handed
- Universal use of PHT external fittings

For the installer
- Straightforward fixing
- Easy adjustment to different door widths and heights

For the architect/specifier
- High-quality appearance with no visible fixings
- Connecting rods with metal covers
- External fitting with dormakaba lever handle or knob

For the user
- Simple operation
- Excellent quality ensures long lifespan

Data and features		Exit Pad[1)]	
		1-point	2-point
Standard doors (single-leaf/double-leaf)		●	●
Fire and smoke check doors (single-leaf/double-leaf) F		●	●
Glass doors		●	●
Door width	≤ 1300 mm	●	–
Door height	≤ 2270 mm	–	●
Max. door leaf weight (in kg)		200	200
Non-handed		●	●
Security anti-thrust latch	for standard doors	–	–
	for fire and smoke check doors	●	●
Unlocking via electric strike		○	○
External fittings PHT For standard doors and fire and smoke check doors For door leaf thicknesses up to 60 mm		●	●
Extended handle spindle and bolts for door leaf thicknesses of 60 – 105 mm		○	○
Approved to EN 179		●	●
CE mark for construction products		●	●

● Yes – No ○ Option

[1)] To achieve a three-point locking system, the Exit Pad can be used as a modular single-point locking device in combination with the PHX components from the PHA 2000/PHB 3000 series.
In conjunction with PHX 05 door height max. 3400 mm (Doors higher than 2500 mm lie outside the scope of EN 179).

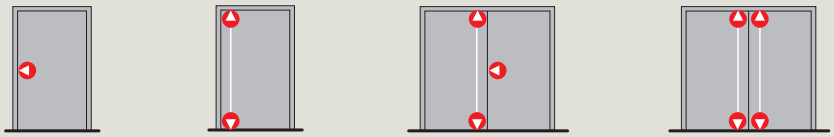

Exit Pad

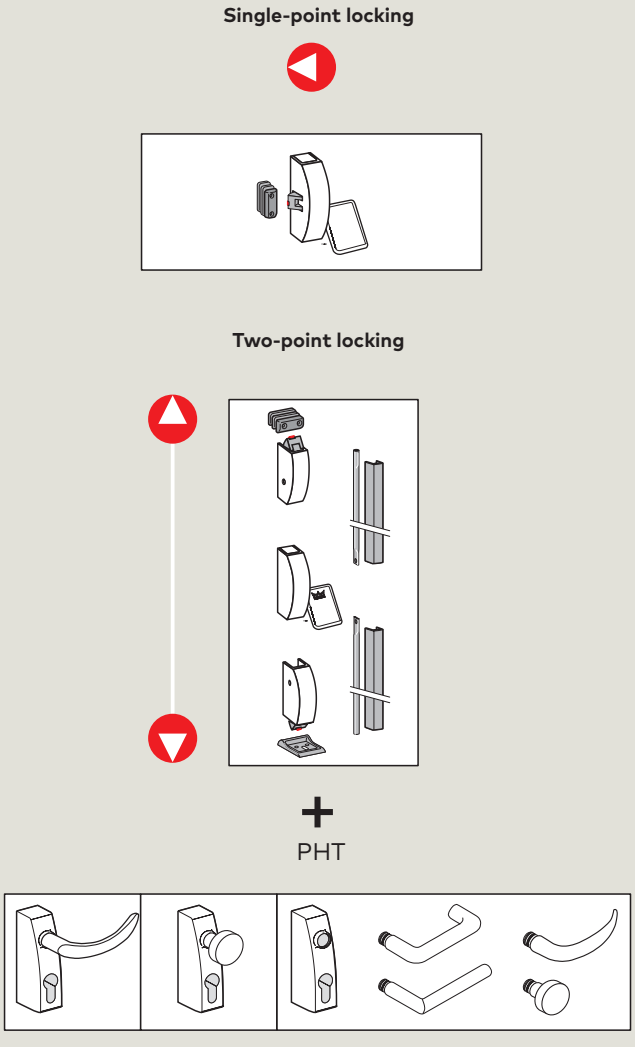

Security anti-thrust latch

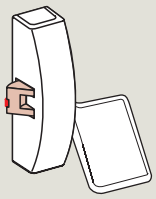

The security anti-thrust latch prevents the latch from being pushed back by unauthorised means when it is in the closed position.

Exit Pad

Single-point locking

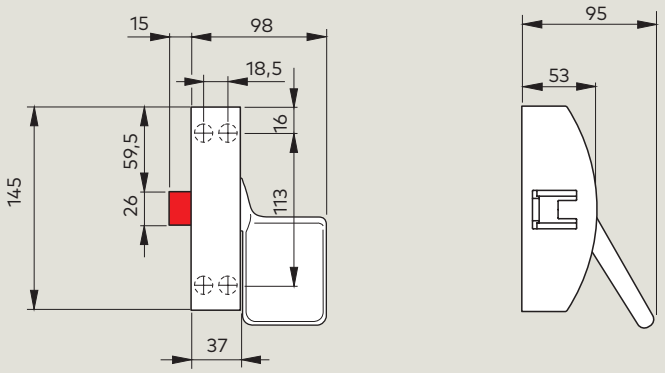

Two-point locking

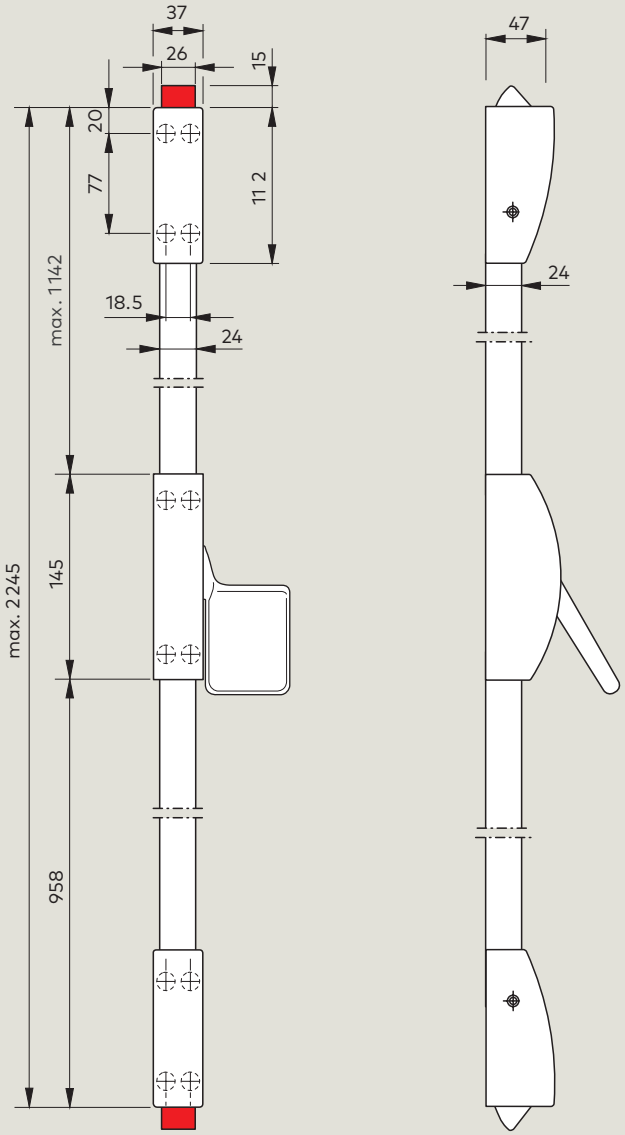

Applications and fixing details

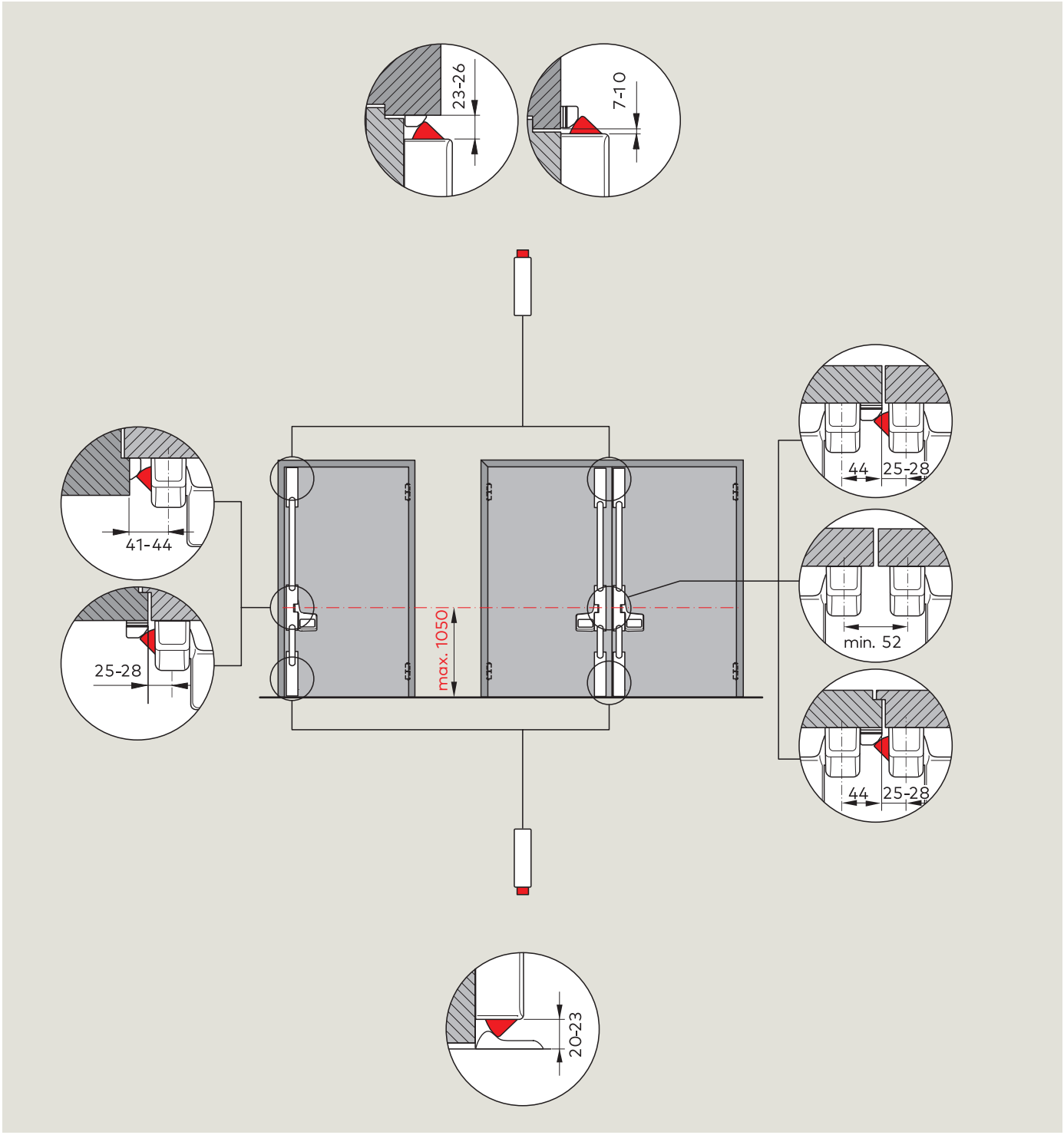

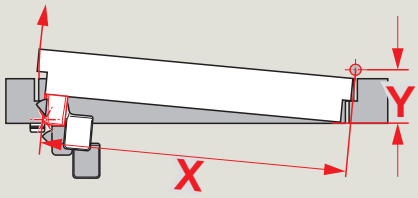

Note

It may be the case that the exit device cannot be installed based on standard measurements where the door situation is extreme, e.g. with a door width X < 1000 mm combined with a hinge offset Y > 90 mm.

dormakaba will be glad to provide you with installation suggestions on request.

Exit Pad

	Specification text	Order No.
	Exit Pad Emergency exit device tested and approved to EN 179, non-handed. Can be unlocked electrically via electric strike. All products of the Exit Pad series carry the CE mark of conformity.	
	**Exit Pad** Single-point locking, modular, for all standard doors, without security anti-thrust latch. Zinc die-cast latch, zinc latch keeper, with spacer plates, plastic mounting bracket. ☐ silver finish	35014 21111001
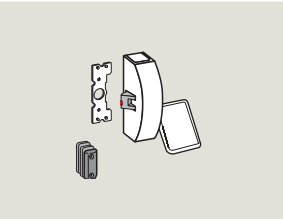	**Exit Pad F** F Single-point locking, modular, for fire and smoke check doors, with security anti-thrust latch. Steel latch, steel latch keeper with spacer plates, plastic mounting bracket. ☐ silver finish ☐ white ☐ stainless steel finish	35014 21121001 35014 21121010 35014 21121004
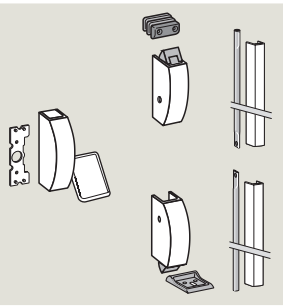	**Exit Pad 2P** Two-point locking for standard doors, door heights up to 2270 mm, without security anti-thrust latch. Zinc die-cast latch, zinc latch keeper with spacer plates, plastic mounting bracket. ☐ silver finish	35014 22111001
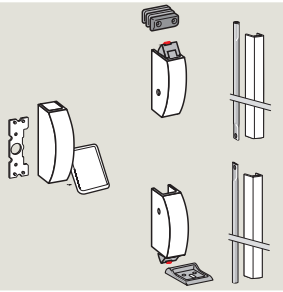	**Exit Pad F 2P** F Two-point locking, for fire and smoke check doors, door heights up to 2270 mm, with security anti-thrust latch. Steel latch, steel latch keeper with spacer plates, plastic mounting backplate. ☐ silver finish ☐ white ☐ stainless steel finish	35014 22121001 35014 22121010 35014 22121004

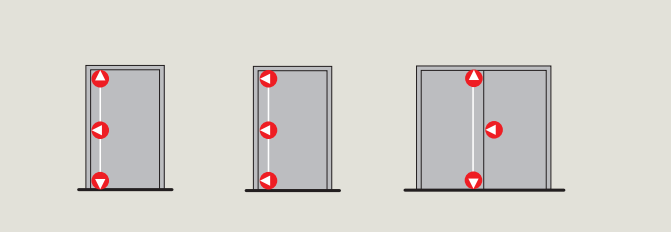

Note

To achieve three-point locking, the modular single-point locking Exit Pad can be used in conjunction with the components of the PHA 2000/ PHB 3000 series.

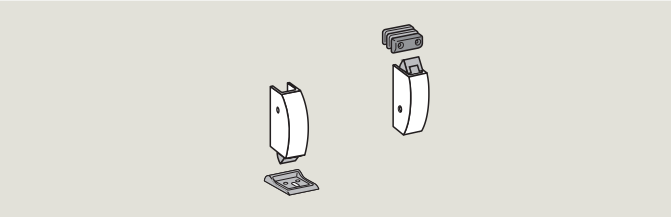

PHX 02

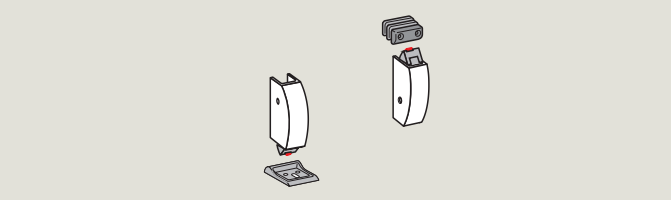

PHX 03

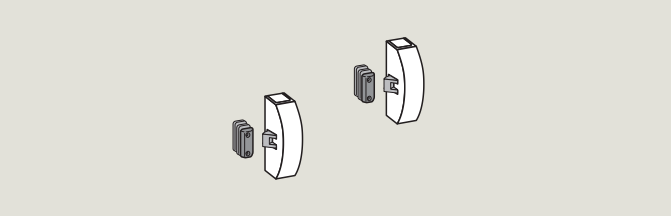

PHX 06

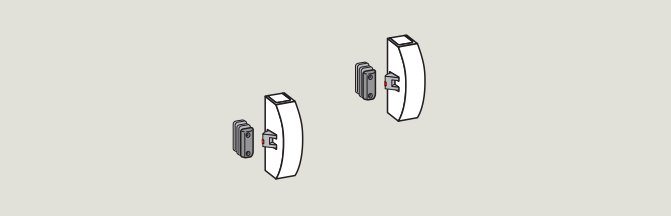

PHX 07

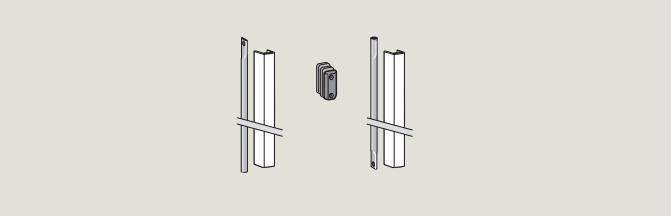

PHX 04

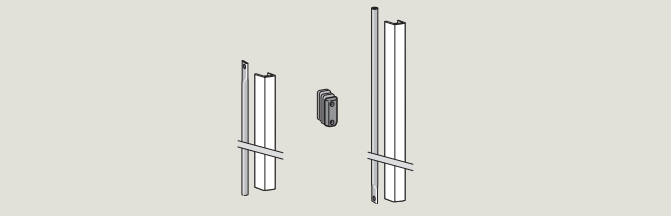

PHX 05

Glass Kit

dormakaba's PHA 2000 and Exit Pad devices can be fitted to a wide range of toughened glass doors.

- For doors in all glass or framed assemblies.
- For single and double doors.
- Single or multi-point Locking.
- Suitable for combination with external glass door mini-fittings.
- For 8 to 10 mm toughened safety glass (single panel).
- Maximum leaf width: 1,300 mm.
- Maximum leaf height: 2,500 mm.
- Standard stainless steel design.

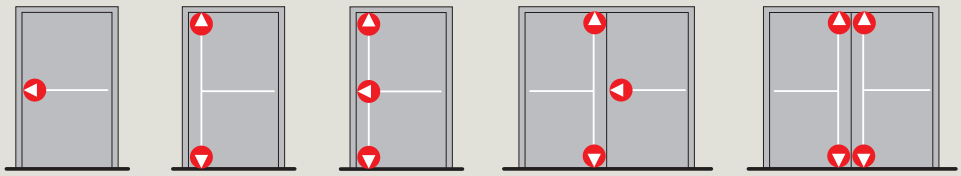

PHA 2000
single-point locking

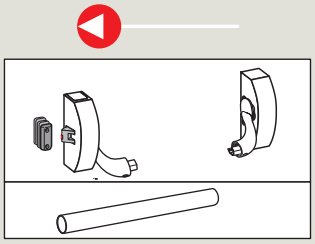

Exit Pad
single-point locking

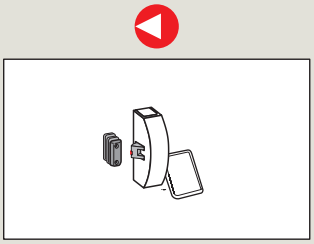

without external fitting	Glass Kit A 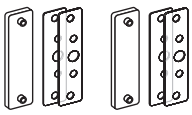
PHT Mini 	Glass Kit B (DIN-L) Glass Kit C (DIN-R) 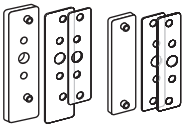

2/3-point locking

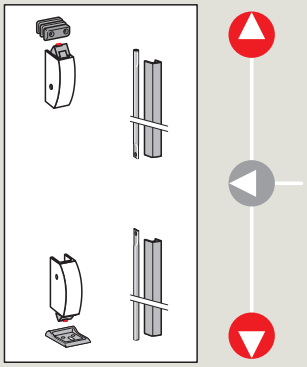

Glass Kit D Glass Kit E

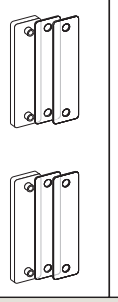

Glass Kit F



2-point locking

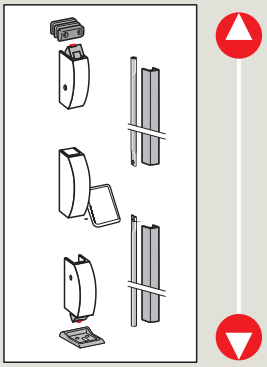

PHA 2000 on glass doors

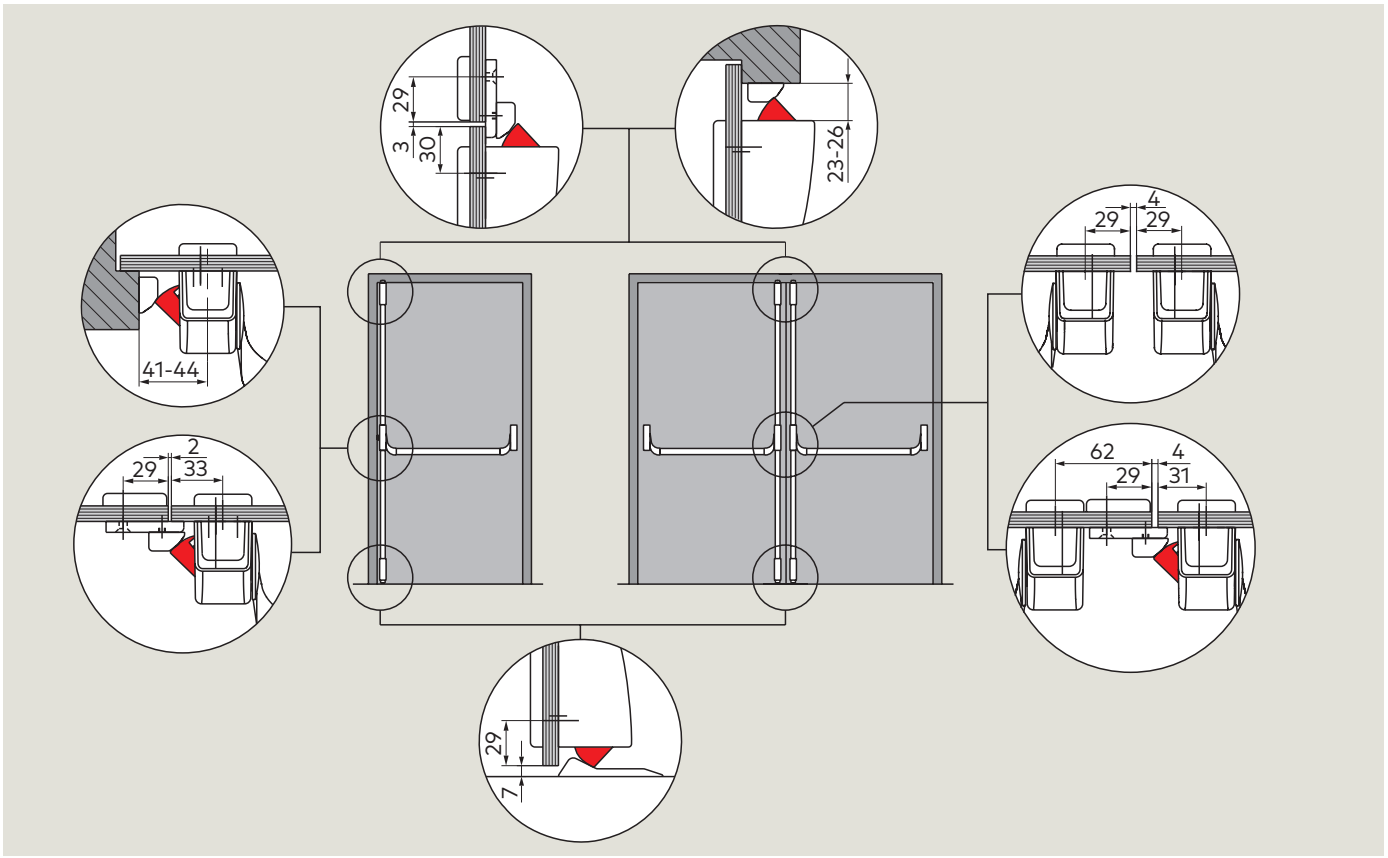

Exit Pad on glass doors

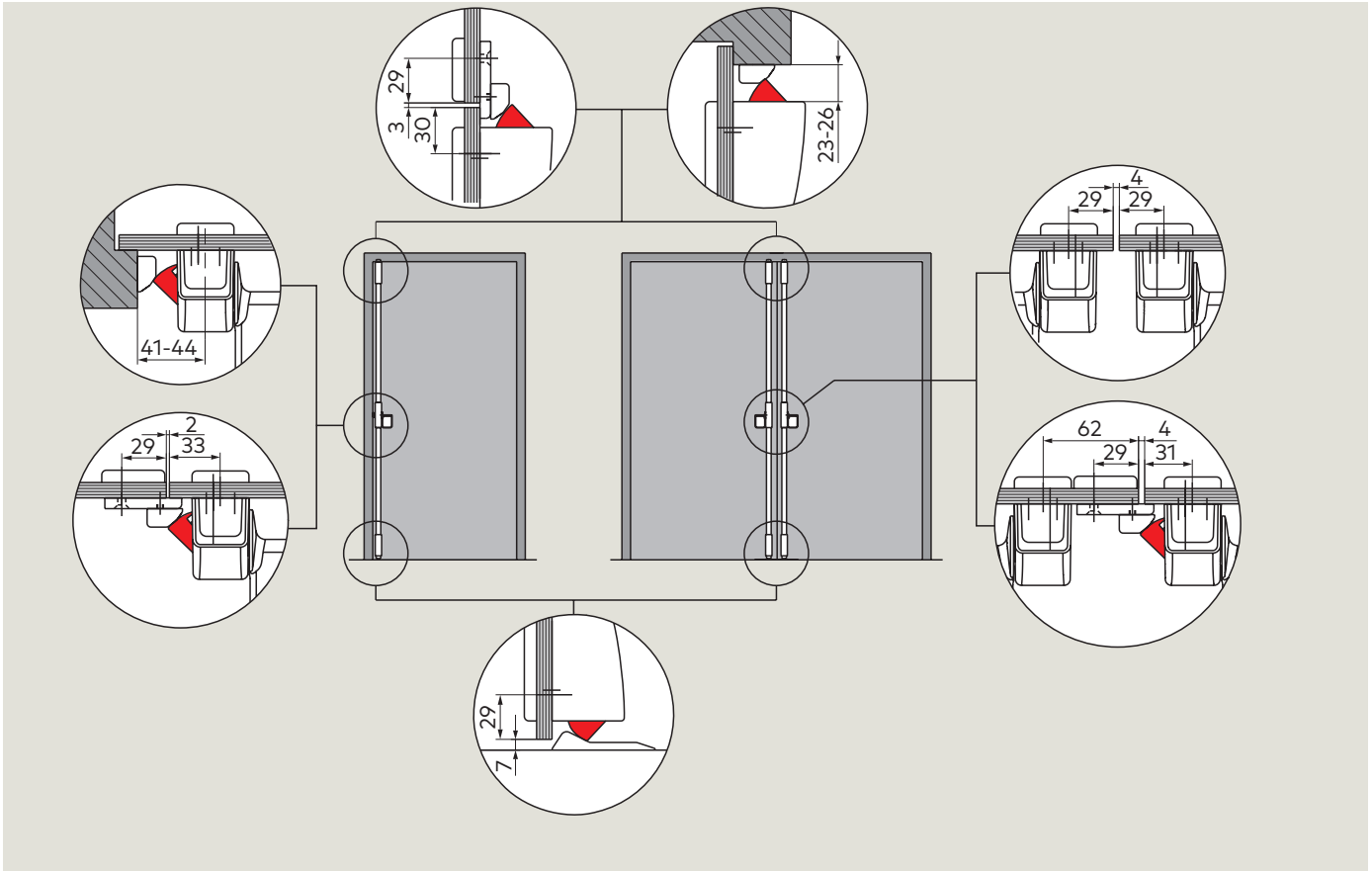

Glass Kit

PHA 2000 / Exit Pad on single leaf all glass doors

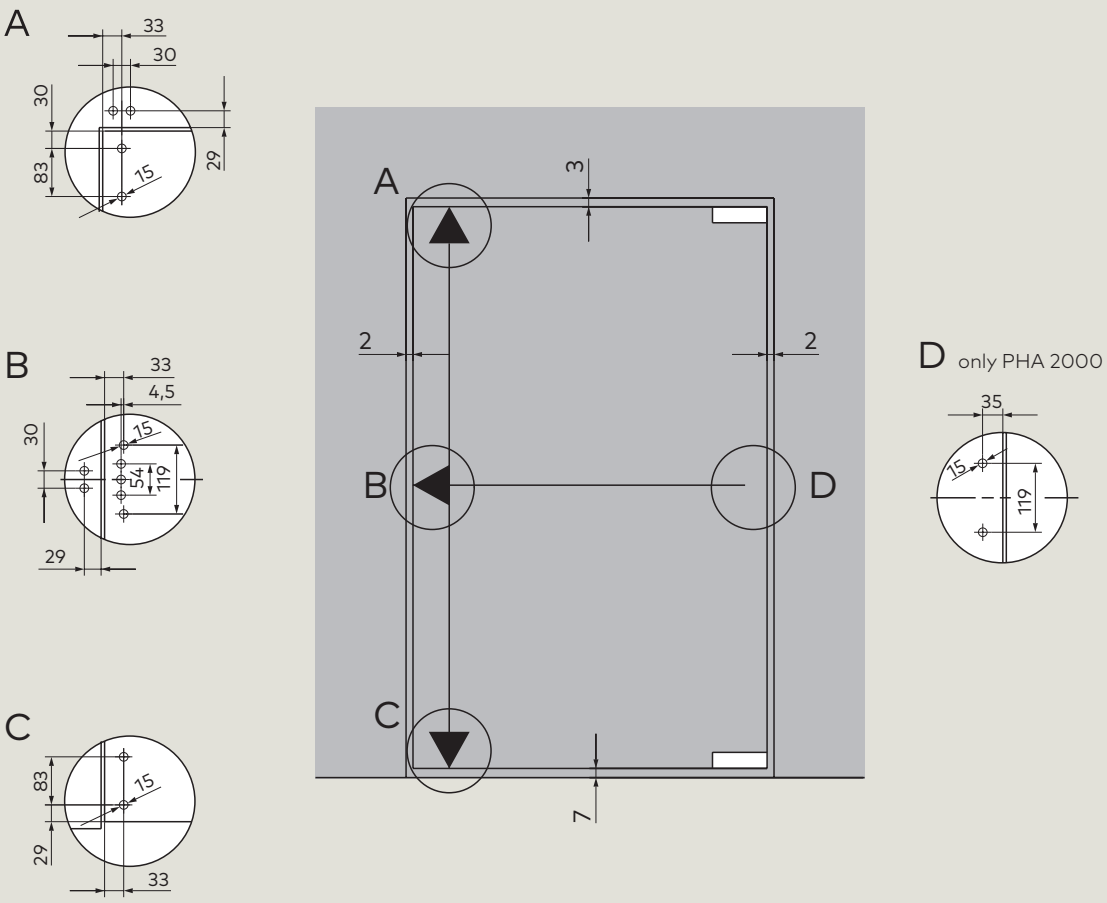

PHA 2000 / Exit Pad on double leaf all glass doors

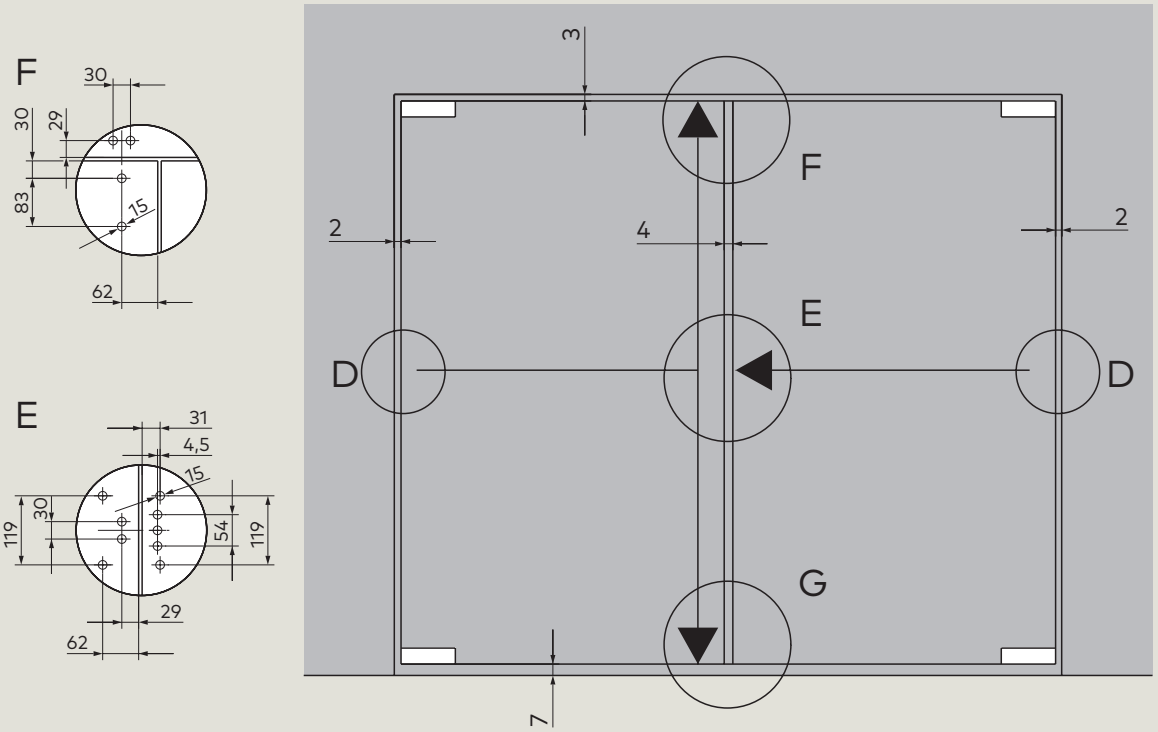

D only PHA 2000

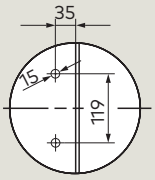

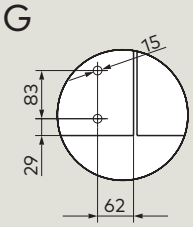

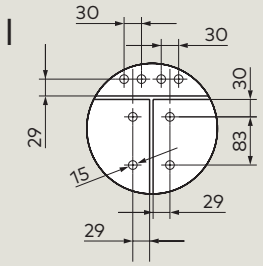

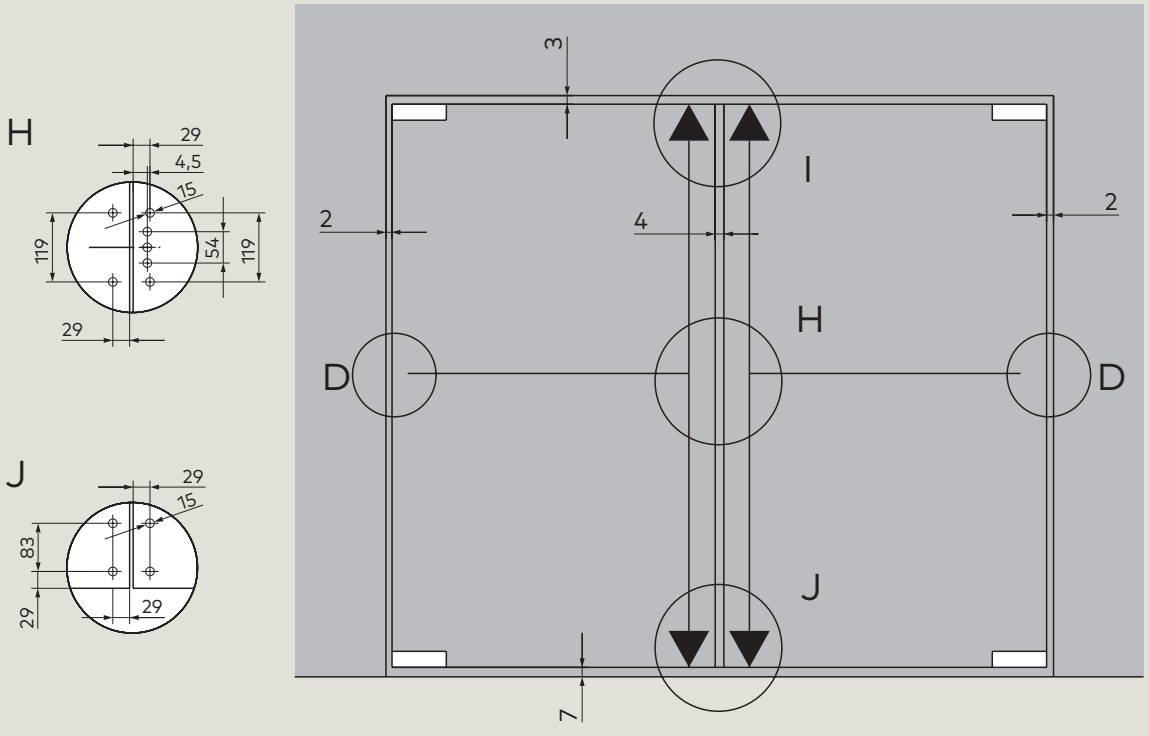

Glass Kit

PHA 2000 / Exit Pad on single leaf glass doors with frame

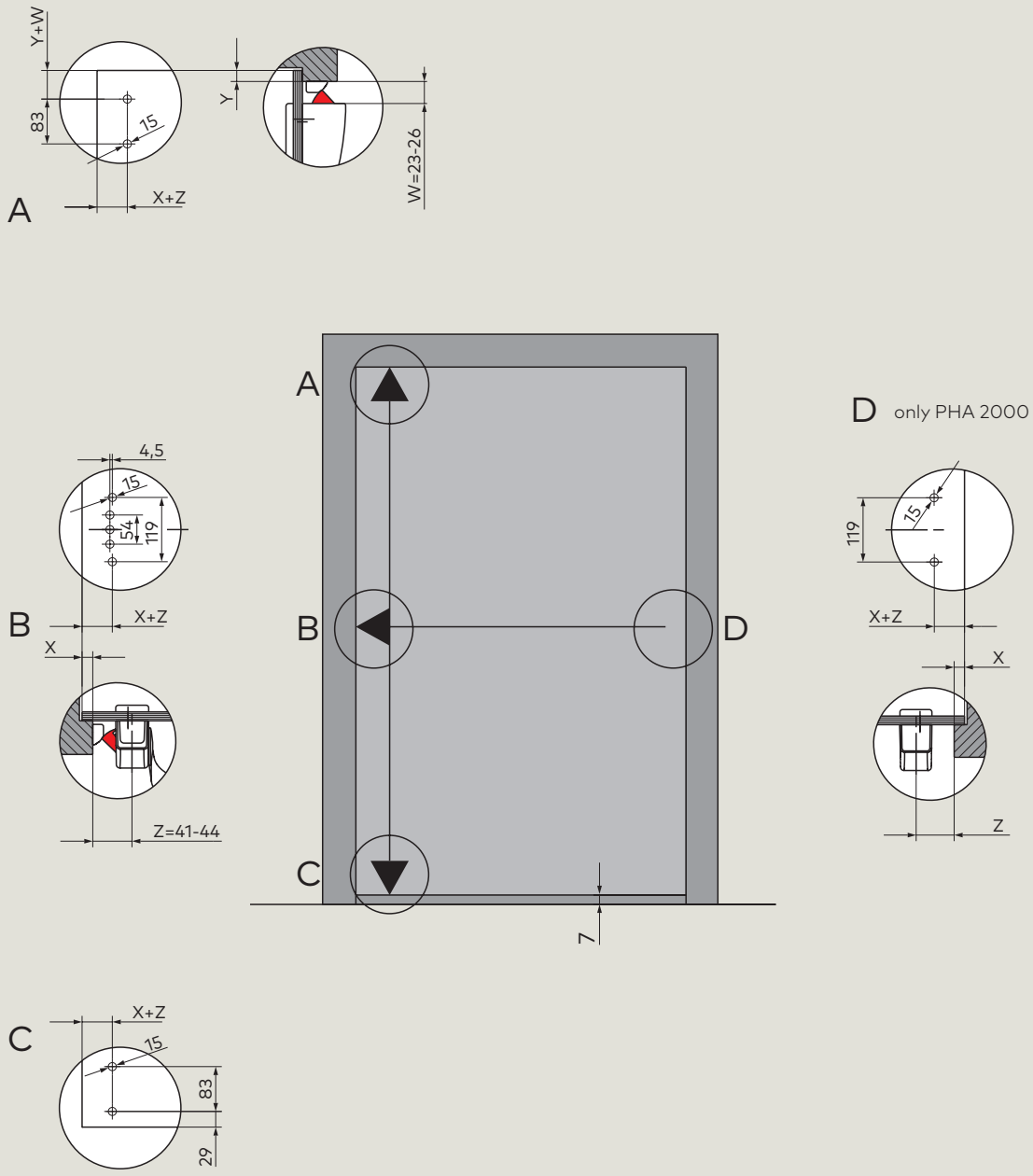

PHA 2000 / Exit Pad on double leaf glass doors with frame

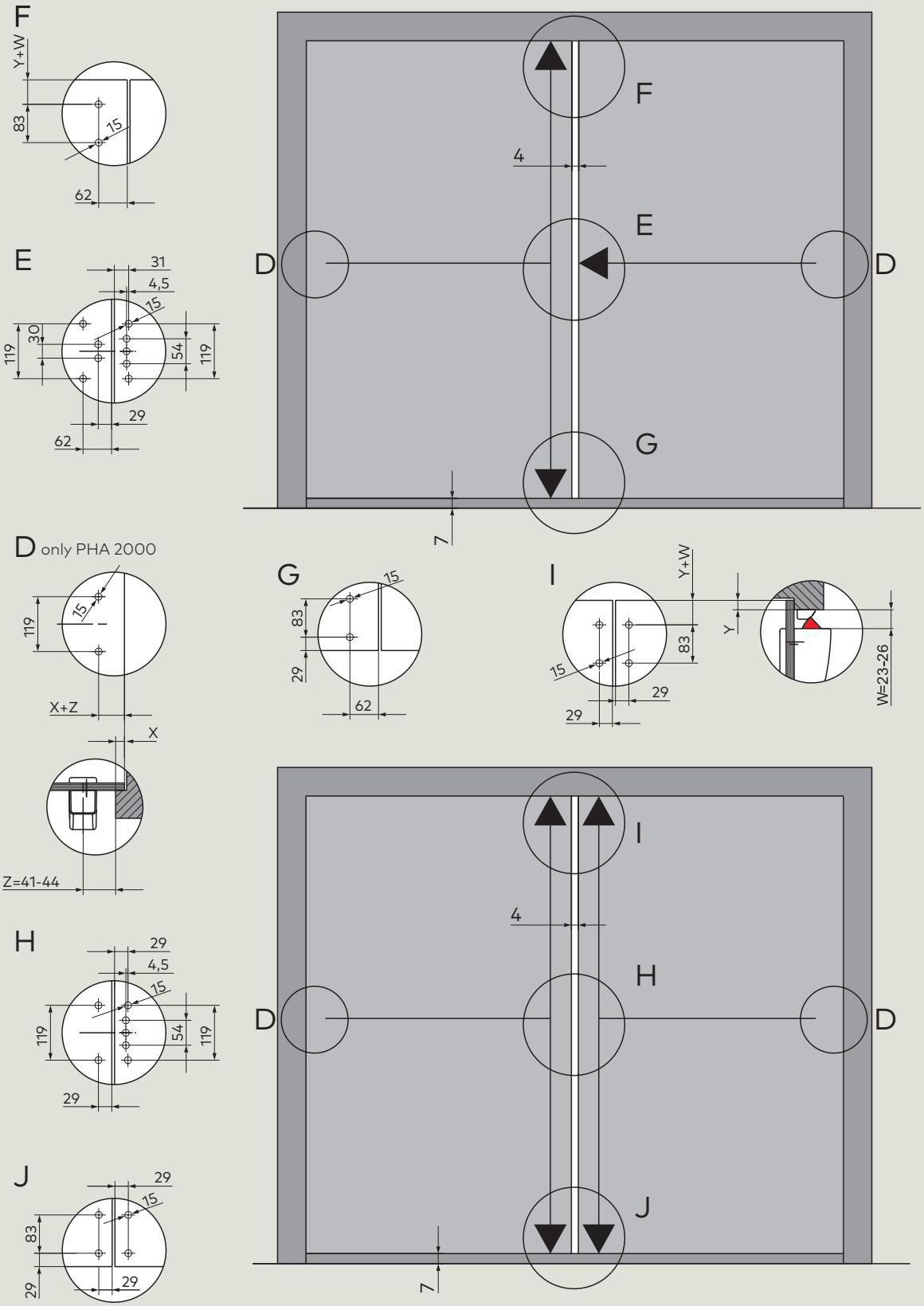

Glass Kit

	Specification text	Order No.
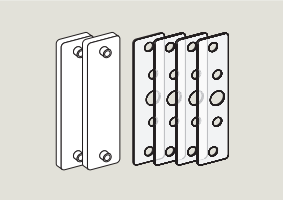	**PHA Glass Kit A** Installation set for PHA 2000, Single-point locking, without external fitting. Stainless steel finish	35014 24011004
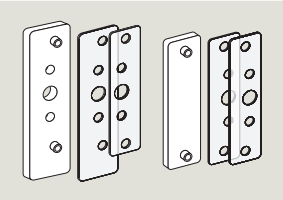	**PHA Glass Kit B** Installation set for LH (ISO 6), for PHA 2000, Single-point locking, with external fitting. Stainless steel finish	35014 24021004
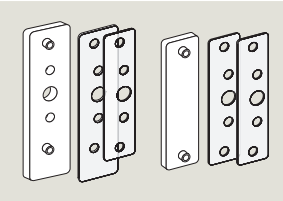	**PHA Glass Kit C** Installation set for RH (ISO 5), for PHA 2000, Single-point locking, with external fitting. Stainless steel finish	35014 24031004
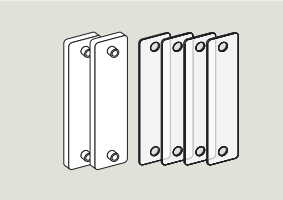	**PHA Glass Kit D** Installation set for PHA 2000, Top and bottom locking, vertical. Stainless steel finish	35014 24041004
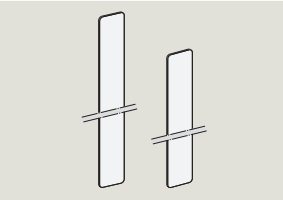	**PHA Glass Kit E** Covering profiles for top and bottom connecting rod. Stainless steel finish	35014 24051004
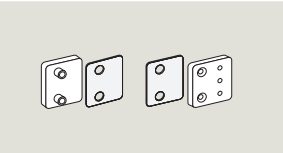	**PHA Glass Kit F** Mounting plate for steel latch keepers, for single and double-leaf doors. Stainless steel finish	35014 24061004
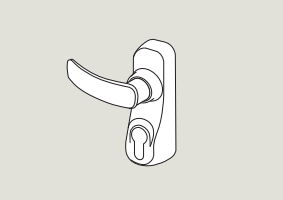	**PHA Glass Kit Mini** External fitting Stainless steel finish	35014 24071004

Accessories

PHX 50 – Electric Strike

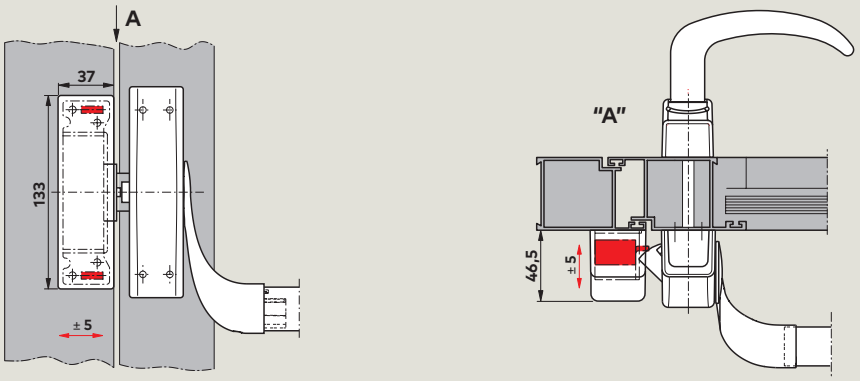

Application example for PHX 50 with PHA 2000 in the Contur design on an aluminium framed door

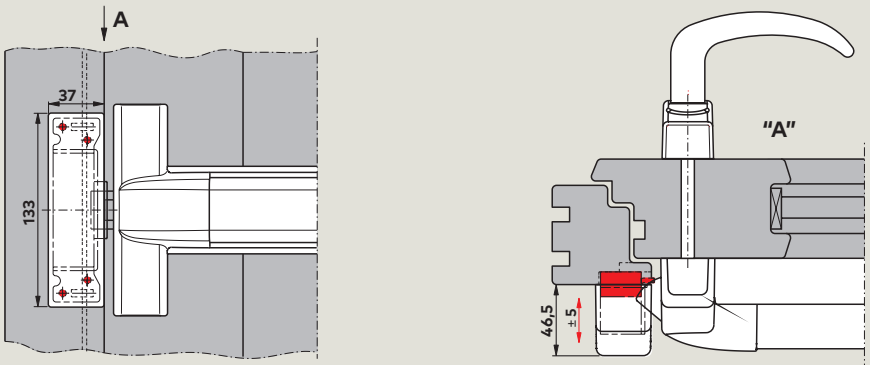

Application example for PHX 50 with PHB 3000 in the Contur design on a wooden door

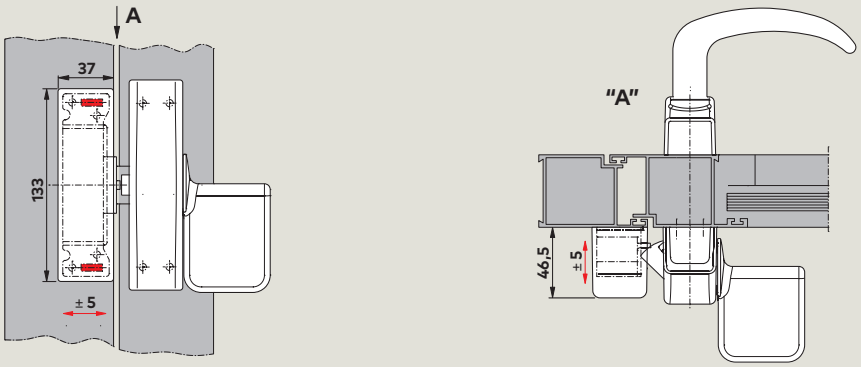

Application example for PHX 50 with Exit Pad in the Contur design on an aluminium framed door

PHX 21 – Adjustable Latch Keeper for Aluminium Narrow-Stile Doors

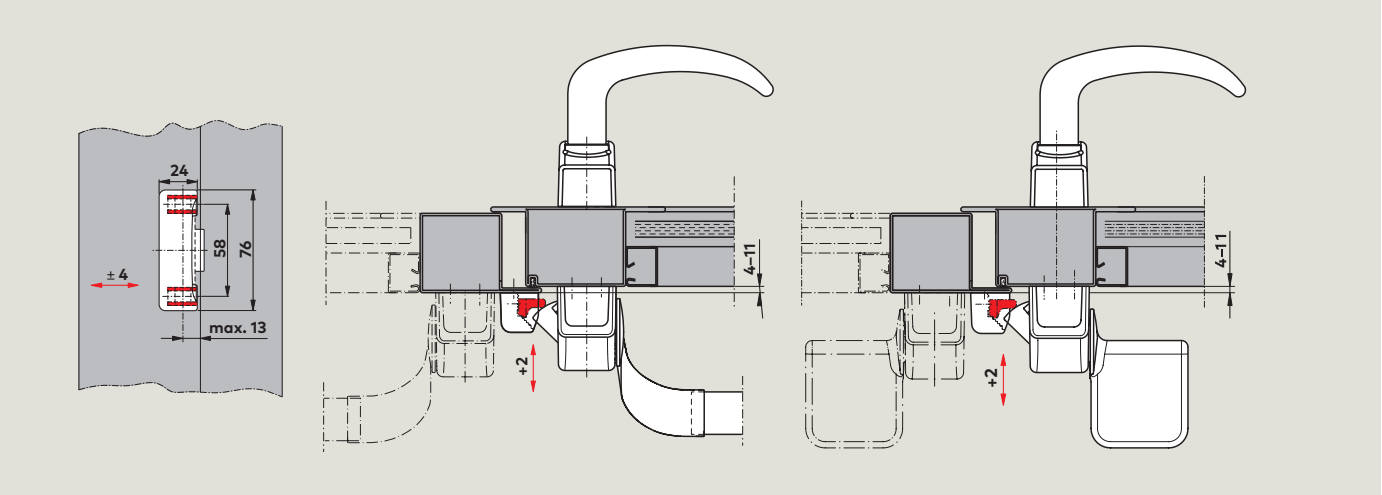

Application example of a PHX 21 on an over-rebated door, universal applicability for single-leaf and double-leaf doors

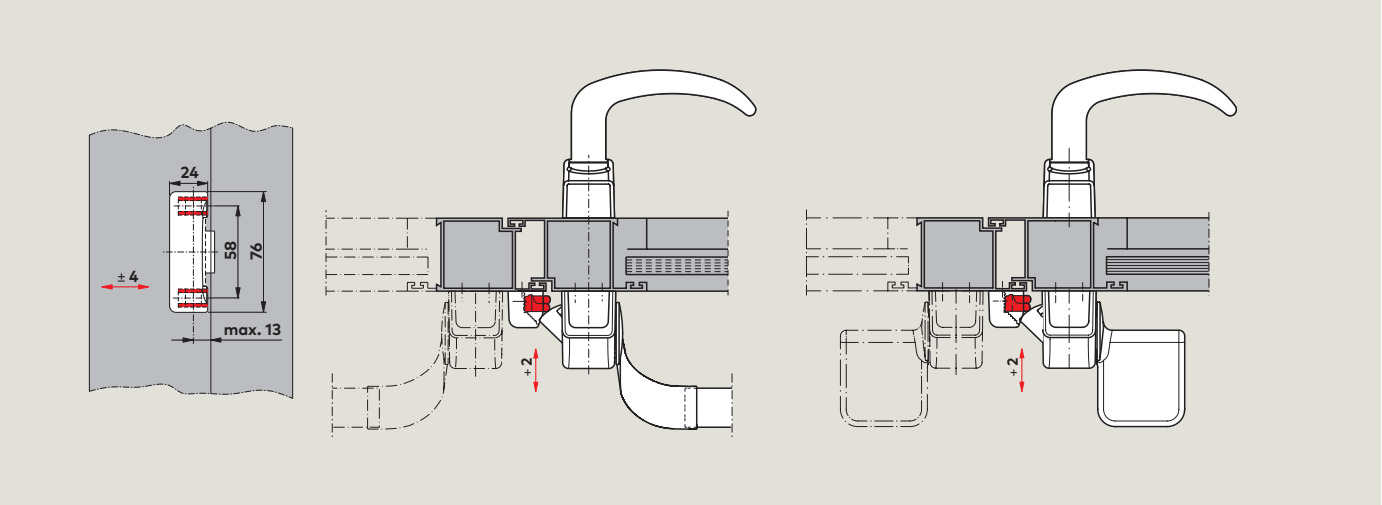

Application example of a PHX 21 on a door with flush meeting stiles, universal applicability for single-leaf and double-leaf

PHX 22 – Adjustable Latch Keeper for PVC Profile Doors

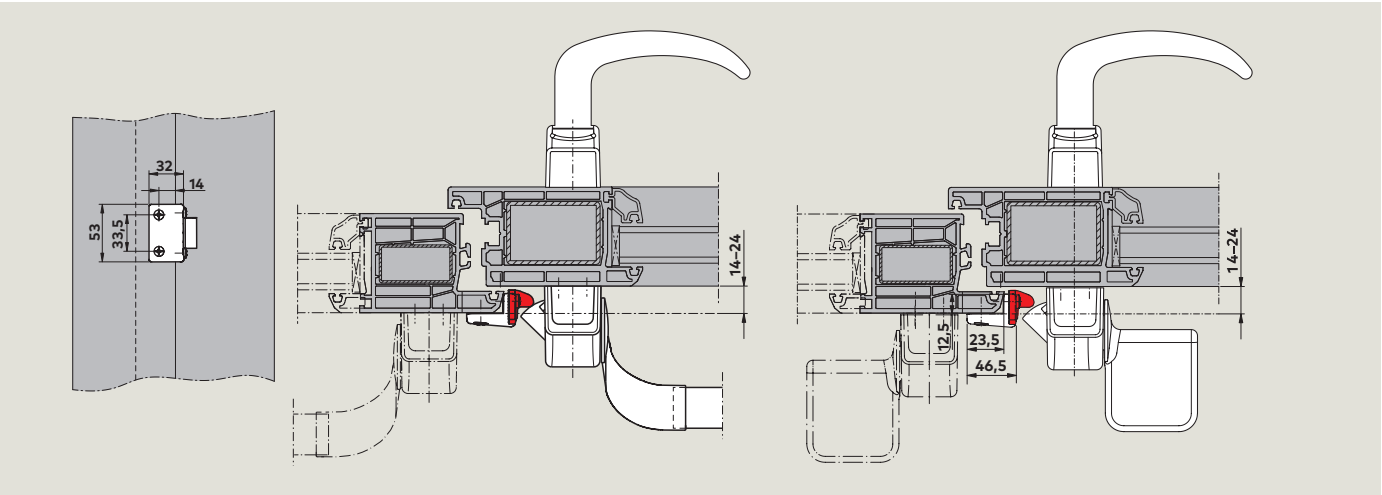

Application example of a PHX 22 on an over-rebated door, universal applicability for single-leaf and double-leaf doors

Accessories

	Specification text	Order No.
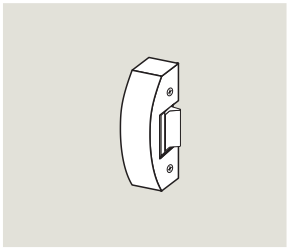	**PHX 50 Electric Strike** In combination with PHA/PHB for use on standard doors with a rebate overlap of up to 24 mm. Zinc die-cast latch engaging device. 12 V AC, 50 Hz, 15 W	
	☐ silver finish	35014 24501001
	☐ black	35014 24501002
	☐ white	35014 24501010
	☐ stainless steel finish	35014 24501004
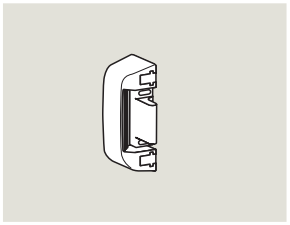	**PHX 21 Adjustable Keeper** For standard aluminium narrow-stile doors, single- and double-leaf, flush or over-rebated (0–11 mm) Zinc die-cast latch (in packs of 5)	
	☐ silver finish	35014 24210101
	☐ black	35014 24210102
	☐ white	35014 24210110
	☐ stainless steel finish	35014 24210104
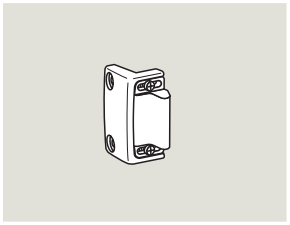	**PHX 22 Adjustable Keeper** For standard PVC profile doors, single and double leaf, over-rebated (14–24 mm) Zinc die-cast latch (in packs of 5)	
	☐ silver finish	35014 24220101
	☐ black	35014 24220102
	☐ white	35014 24220110
	☐ stainless steel finish	35014 24220104
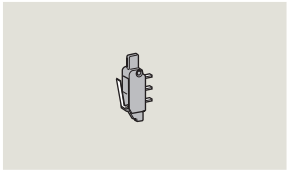	**PHA Microswitch** For actuation of visual or audible signals. Contact rating: max. 48 V DC, max. 3 A	35014 25200060
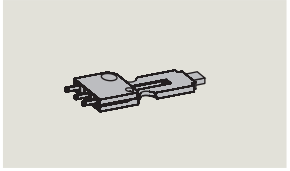	**PHB Microswitch** For actuation of visual or audible signals. Contact rating: max. 48 V DC, max. 3 A	35014 35201061

	Specification text	Order No.
	**PHX Mounting Backplate** Steel, galvanised (in packs of 10) for factory pre-installation to simplify field installation	35014 25200050
	**PHX Mounting Backplate** Steel, galvanised (in packs of 10) for factory pre-installation to simplify field installation	35014 25200051

PHT External fitting

	Specification text	Order No.
	PHT External fitting with lever handle or knob, suitable for use with PHA 2000 and PHB 3000. All PHT external fittings and non-handed and carry the CE mark.	
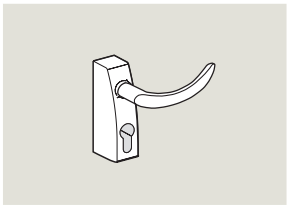	**PHT 01** External fitting with lever handle, for standard doors with a leaf thickness of up to 60 mm, prepared for installation of a Europrofile single cylinder. With lever handle spindle and two cylinder fixing bolts. ☐ silver finish ☐ black ☐ white	 35014 39011001 35014 39011002 35014 39011010
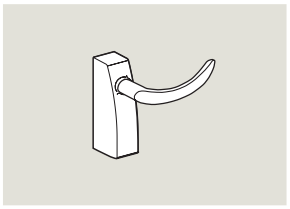	**PHT 03** External fitting with lever handle, for standard doors with a leaf thickness up to 60 mm, non-lockable. With lever handle spindle. ☐ silver finish ☐ black ☐ white	 35014 39031001 35014 39031002 35014 39031010
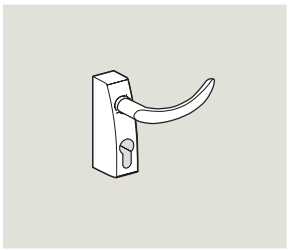	**PHT 05** F External fitting with lever handle for fire and smoke check doors with a leaf thickness up to 60 mm. With integrated ring gasket. Prepared for installation of a Europrofile single cylinder. With lever handle spindle and two cylinder fixing bolts. ☐ silver finish ☐ black ☐ white ☐ stainless steel finish	 35014 39051001 35014 39051002 35014 39051010 35014 39051004
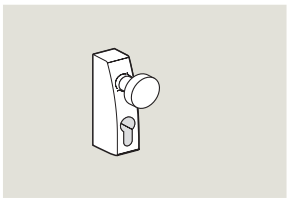	**PHT 06** External fitting with knob, non turnable, for standard doors with a door thickness up to 60 mm, prepared for the installation of a Europrofile single cylinder. With lever handle spindle and two cylinder fixing bolts. ☐ silver finish ☐ black ☐ white	 35014 39061001 35014 39061002 35014 39061010
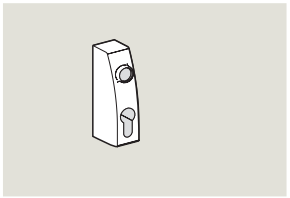	**PHT 07** F External fitting, suitable for combination with lever handles or knobs for fire and smoke check doors. With lever handle spindle and two cylinder fixing bolts. ☐ silver finish ☐ black ☐ white ☐ stainless steel finish	 35014 39071001 35014 39071002 35014 39071010 35014 39071004

	Specification text	Order No.
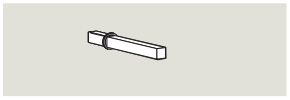	**PHT S 05 Extended Spindle** 8 mm square, incl. fixing screws for door leaf thicknesses of 60 – 105 mm.	35014 39200050
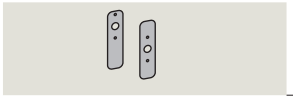	**F Gasket Set** For external fitting and PHA / PHB exit devices fixed to fire and smoke check doors.	35014 39200060
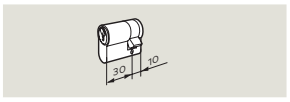	**TL-Z 03** Single Europrofile cylinder with 3 keys, for PHT 01, 05, 06, 07	35014 56510300

PHT – External Fitting

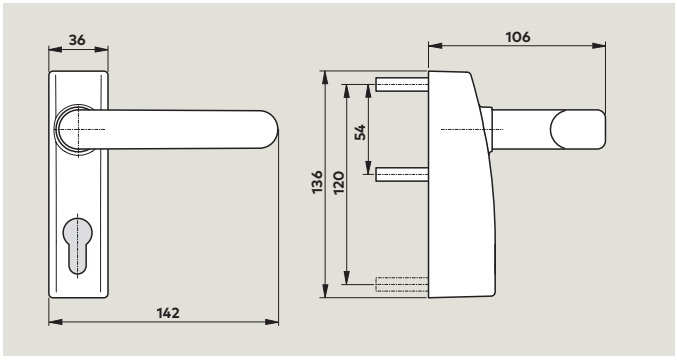

PHT 01, 03, 05 – External fitting with lever handle

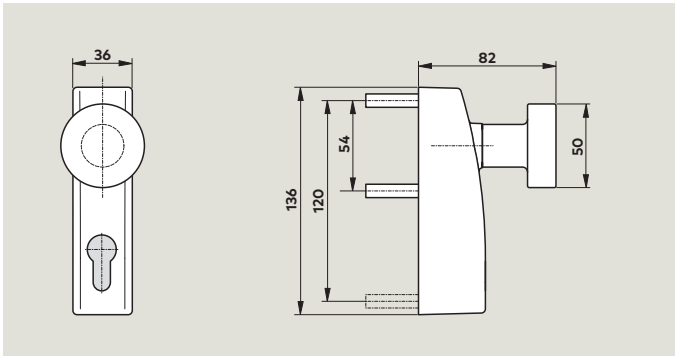

PHT 06 – External fitting with knob

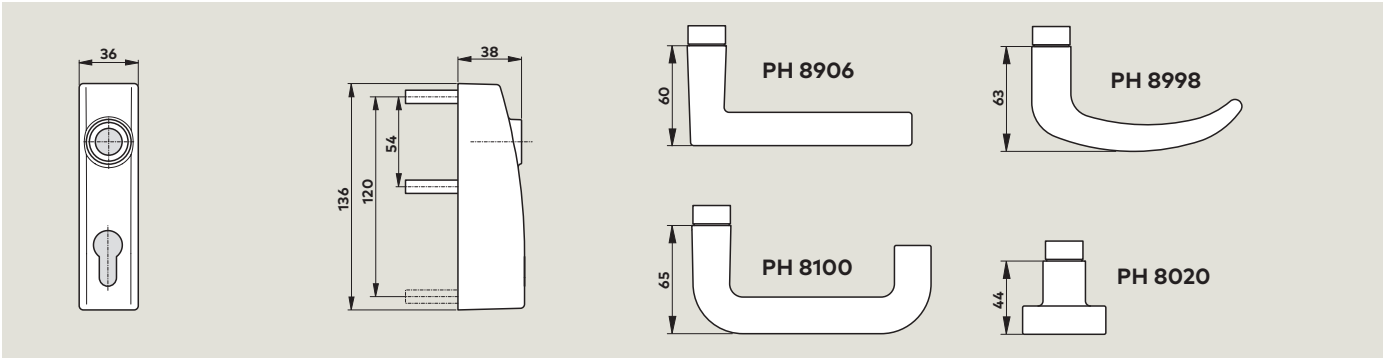

PHT 07 – External fitting, modular

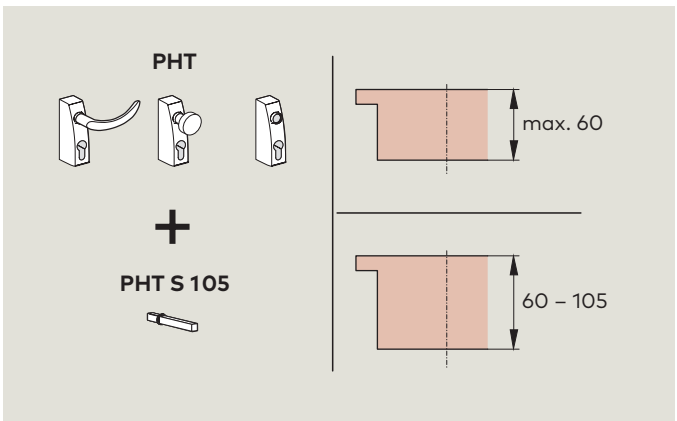

F

When using the PHT external fitting in conjunction with the PHA/PHB panic hardware series or Exit Pad on fire and smoke check doors, it must be ensured that the appropriate set of gaskets is used.

The panic hardware products of the DORMA PHT series carry the CE mark of conformity.

WN 053 502 51532, 12/16, PH Contur, GB, x. DMS. xx/13
Subject to change without notice

dormakaba Deutschland GmbH
DORMA Platz 1
58256 ENNEPETAL
Germany
T: +49 2333 793-0
F: +49 2333 793-4950

CE



Serrated Key System AP1000

System AP1000 (System Code P001)

The Gege cylinder series AP1000 is a 5 pin cylinder system in medium security grade.

Function
The dormakaba serrated key system AP1000 is a 5 pin cylinder system in medium security grade. Over 45,000 different keyings are possible with the standard profile P001.

Key Codes
Due to the keys being numbered in the factory, code tables can be used to produce duplicate keys rapidly and without corresponding sample keys.

Security Features
- Protection against impressioning by specially formed housing tumbler pins
- Suitable for use in fire and smoke resistant doors

Standard Configuration
- key with round bow, nickel plated
- 5 vertically arranged tumbler pin pairs

SEALz® ACOUSTIC DOOR DROP SEAL DATA SHEET

The Product

SEALz® Acoustic Door Drop Seal (SZCDS1MF) is designed for timber and steel doors providing an excellent barrier to airborne sound and helping to ensure that the acoustic attenuation provided by an acoustic doorset. When soundproofing a room, ordinary doors without acoustic seals are often the weak point, letting in more noise than the surrounding walls. Within this week point, the weakest part of the door system are air gaps between the door and its frame. Sound can pass through these gaps easily without attenuation.

SEALz® Acoustic door drop seal automatically lowers when the door is closed by pressure against the door jamb, it reduces the sound wave from passing through the bottom of door leaf and lower sound transmission into the room. By sealing air gaps, they also have the additional benefit of preventing heat transmission and stopping dust and insects from entering the room

Specification

SEALz® Acoustic door drop seal F series provide further protection to fire, when triggered by heat 150C to 200C the intumescent flex will expand rapidly whereby it will achieve over 20 fold volume expansion ratio and produce a high pressure volume foam to prevent the passage pf fire, smoke and fumes from spreading from the sound to the adjacent compartments.

Product	: SZCDS1M series
Material	: Aluminium holder with auto raise and lower mechanism
Acoustic Seal	: Silicone Seal heat resisting to 200C
Cyclic Movement Test	: 200,000 cycle
Fire Seal	: F series both sides glued with Flexiflex thickness 15mm x 2mm
Fire Tested Standard	: Tested to UL10C, BS 476 Part 22-24, EN 1634-1 2018

Availability

SEALz® Acoustic door drop seal F series is available in varies length and sizes

a. Length : 300mm to 1500mm
b. Width : 16mm
c. Height : 30mm

Related Products

Fire & Acoustic Solution Pte Ltd. can also offer a range of Intumescent Fire Seal, Intumescent Pads, Acoustic Seal, Bestwing, Fire Louver, Intumescent sealant, and bespoke service for fire resistance products.

Contacting Us

info@fireacoustic.com

序号 Item	名称 Part name	材料 Material	数量 QTY.
1	椭圆面板 Rose cover	SUS304	2
2	椭圆底座 Base	SUS201	2
3	单弯拉手 Handle	SUS304	2

base

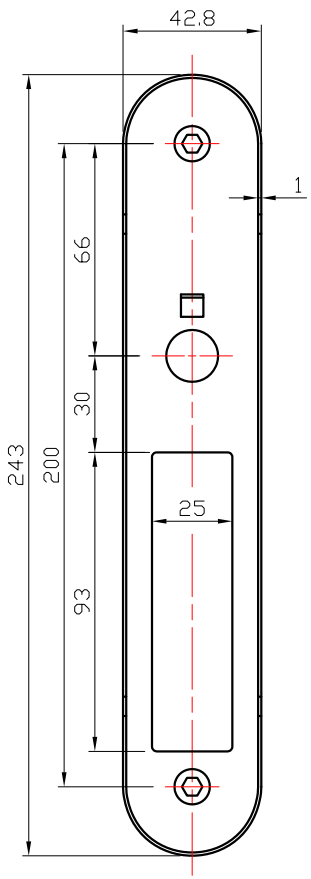

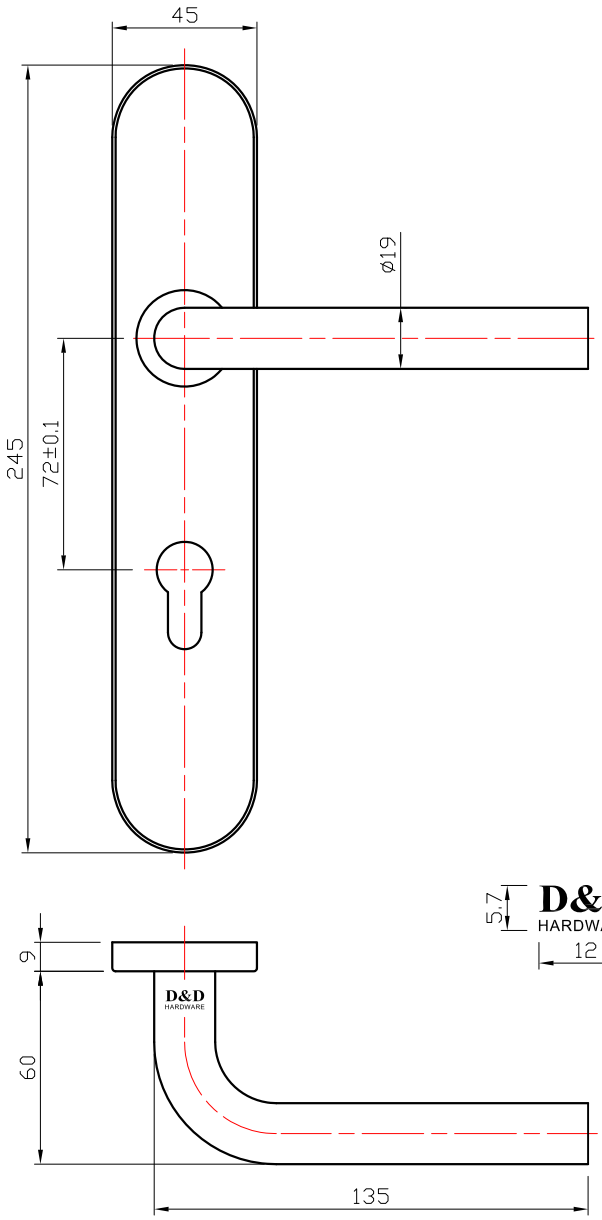

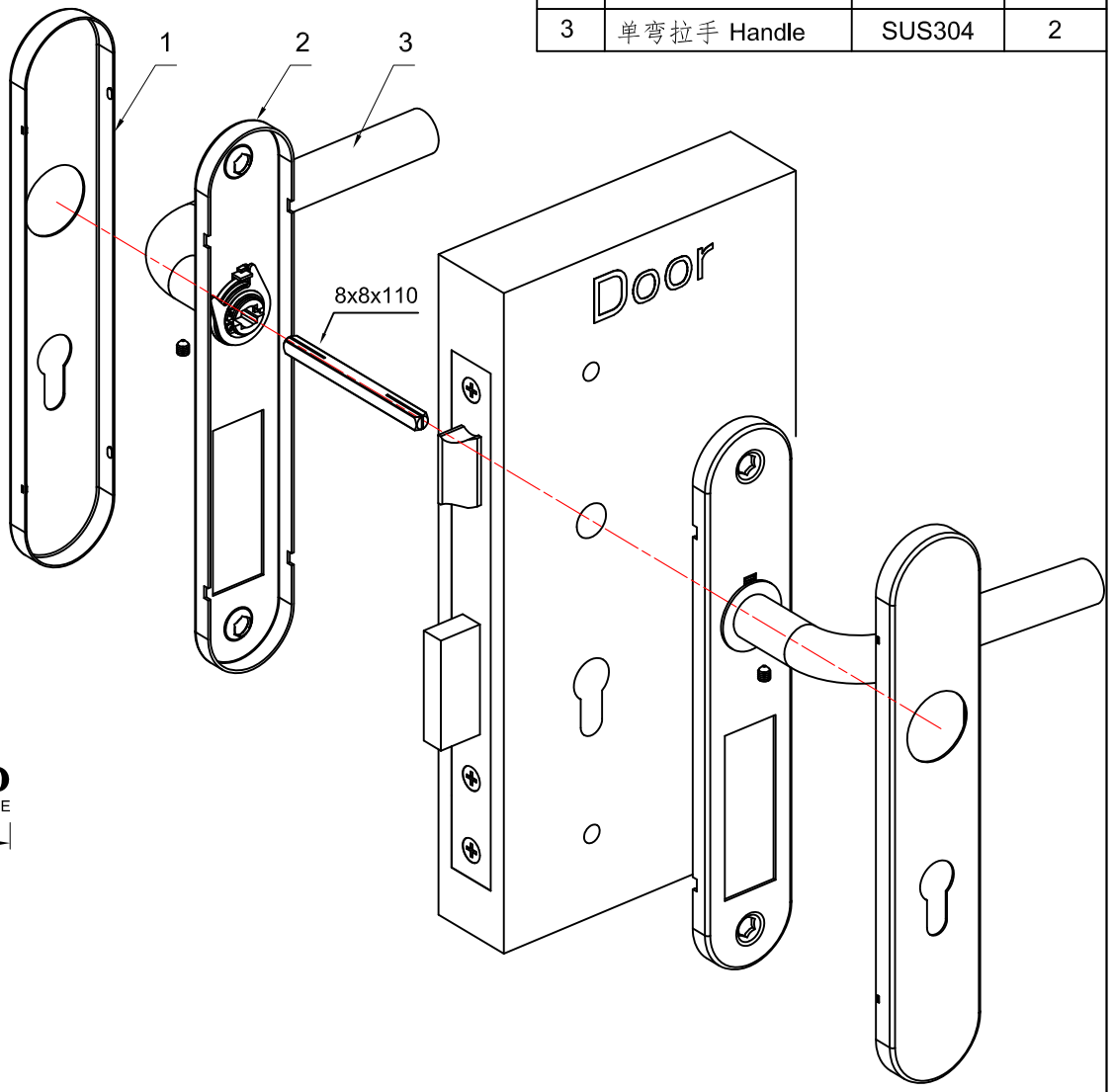



六角匙
Hex key
3mm
1 pc



竹节
Hex screws
M4x60mm
2 pcs



木牙螺丝
Wooden screws
ST4.2x25mm
4 pcs

File number: 21/23426-439

锐新五金 D&D HARDWARE			合同号 Contract			
			产品名称 Item	Lever handle with plate	订单数量 Quantity	
绘 图 Drawn	May	2021.04.13	产品型号 Model	DDTP003+DDTH002	主要材质 Main Material	SUS304
审 核 Check by	Jobby	2021.04.13	产品规格 Size	245x45x72	配件材质 Accessories Material	
批 准 Approved by	David	2021.04.13	产品表面 Finish		视图方向: 3D Angle Projection:	

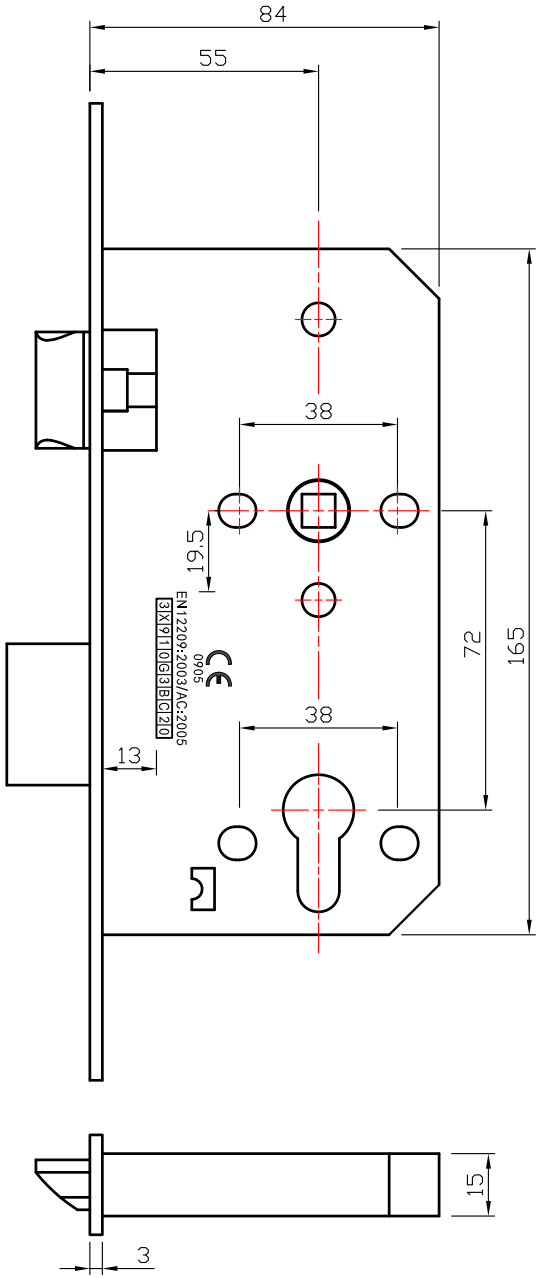

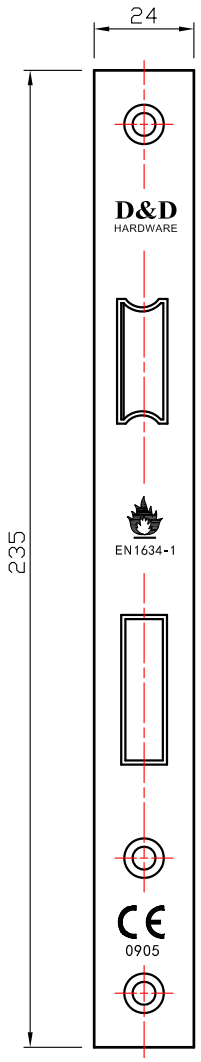

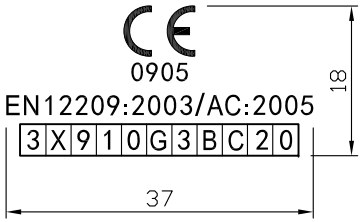

激光唛 x1
Laser logo



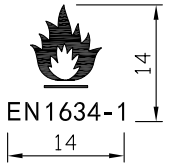

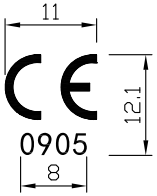

激光唛 x3
Laser logo

锐新五金 D&D HARDWARE			合同号 Contract			
			产品名称 Item	锁体 Fire Sash Lock	订单数量 Quantity	
绘 图 Drawn	May	2020.05.08	产品型号 Model	DDML009	主要材质 Main Material	SS304
审 核 Check by	Jobby	2020.05.08	产品规格 Size	55x72	配件材质 Accessories Material	
批 准 Approved by	David	2020.05.08	产品表面 Finish		视图方向: 3D Angle Projection:	

File number: 21/23426-439

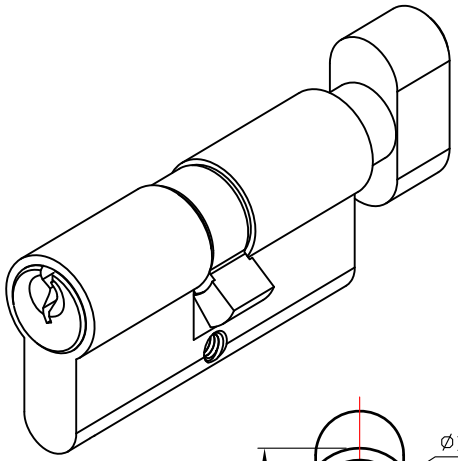

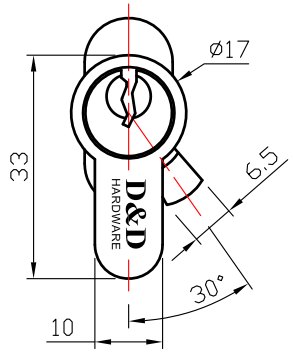

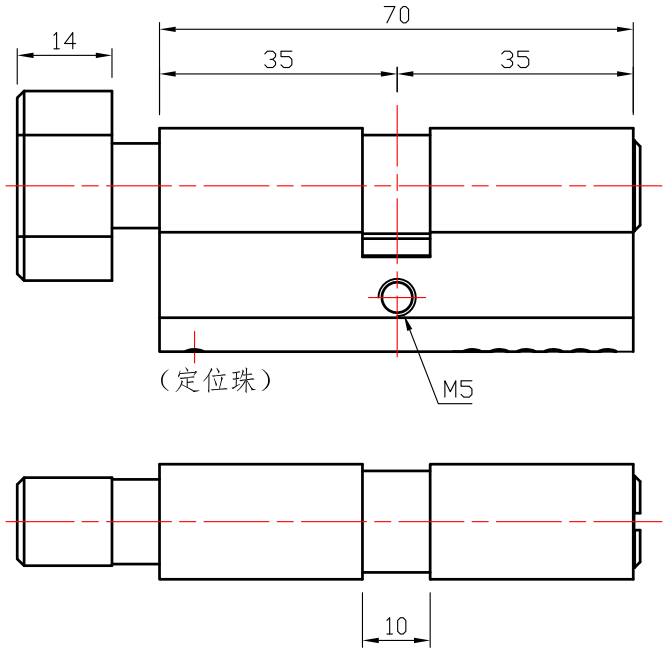

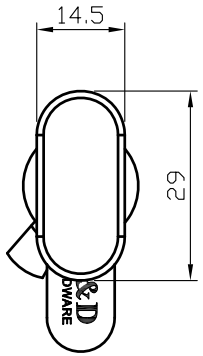

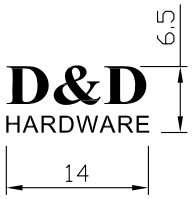

双面打唛

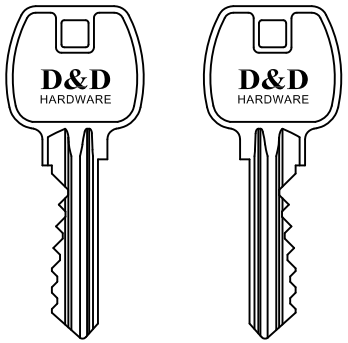

Simple Key -6 pin
普通匙-6珠
3 pcs

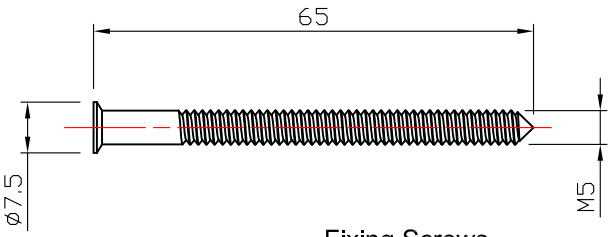

Fixing Screws
安装螺丝
1 pcs

File number: 21/23426-439

锐新五金 D&D HARDWARE			合同号 Contract			
			产品名称 Item	单开锁芯 Lock cylinder	订单数量 Quantity	
绘 图 Drawn	May	2020.03.11	产品型号 Model	DDLC004	主要材质 Main Material	铜 /Brass
审 核 Check by	Jobby	2020.03.11	产品规格 Size	70mmx30°	配件材质 Accessories Material	
批 准 Approved by	David	2020.03.11	产品表面 Finish		视图方向: 3D Angle Projection:	

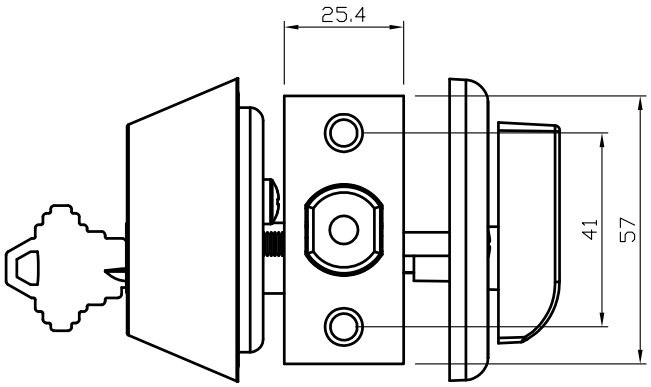

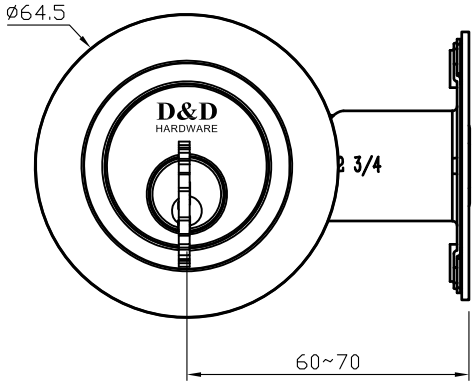

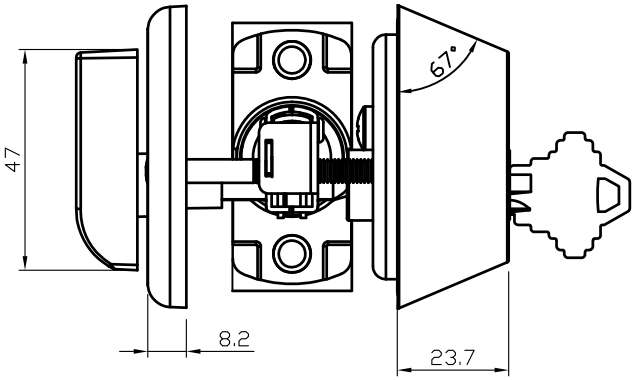



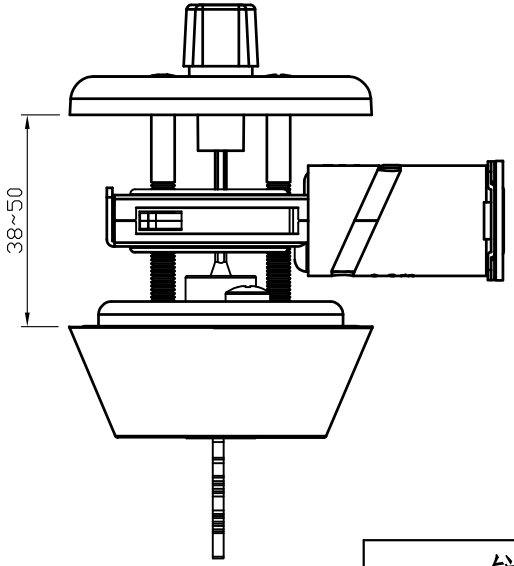

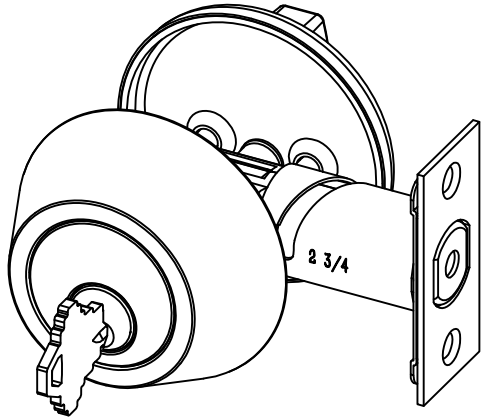

锐新五金 D&D HARDWARE			合同号 Contract			
			产品名称 Item	闭锁	订单数量 Quantity	
绘 图 Drawn	May	2021.06.16	产品型号 Model	DDLK013	主要材质 Main Material	SUS304
审 核 Check by	Jobby	2021.06.16	产品规格 Size	70mm / 60mm	配件材质 Accessories Material	
批 准 Approved by	David	2021.06.16	产品表面 Finish		视图方向: 3D Angle Projection:	

File number: 21/23426-439

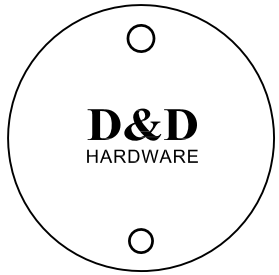

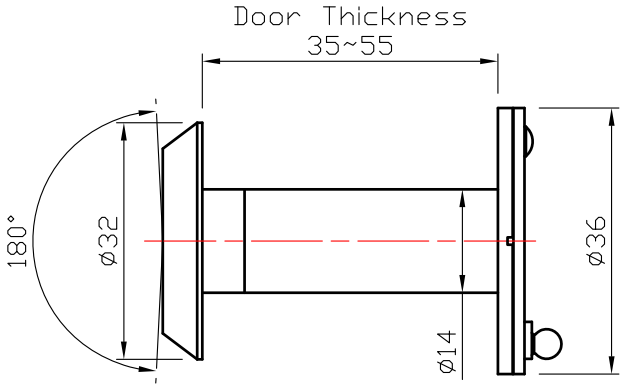



锐新五金 D&D HARDWARE			合同号 Contract			
			产品名称 Item	猫眼 With cover	订单数量 Quantity	
绘 图 Drawn	May	2019.07.02	产品型号 Model	DDDV004	主要材质 Main Material	Steel
审 核 Check by	Jobby	2019.07.02	产品规格 Size	Ø14xØ32x180°	配件材质 Accessories Material	
批 准 Approved by	David	2019.07.02	产品表面 Finish		视图方向: 3D Angle Projection:	

File number: 21/23426-439

TATMETAL

TEST SERTİFİKASI
MILL TEST CERTIFICATE
EN 10204 3.1

Müşteri/Customer : EL+ LTD
Ürün/Product : GZRES
Standart : EN 10346:2015
Gemi Adı/Vessel Name :

Certificate : C20028460
Tarih/Date : 23.10.2020
Sipariş No/Order No : X5000578
Sayfa/Page : 1/2

Row Num	Etiket No/Bobin/Paket Number (IndivudualCoil / Package Number)	Heat Number	Ağırlık (Weight)	Ürün Tipi (Product Type)	Çelik Kalitesi (Steel Quality)	Kalınlık (Thickness)	Genişlik (Width)	Boy (Length)	Yüzey Tipi (Surface Type)	Yüzey Kalitesi (Surface Quality)	Yüzey Koruma (Surface Protection)	Kaplama Ağr. (Coating Weight)	Mekanik Özellikler (Mechanical Properties)								Kimyasal Bileşim(%) (Chemical Composition%)														
			Kg / Pound			mm / Inch	mm / Inch	mm / Inch				(gr / M2)	Re (N/mpa/KSI)	Rm (N/mpa/KSI)	A (%)	r90	n90	rm	nm	Sertlik Hardness (hrb)	C	Mn	P	S	Si	Al	Ti	Nb	Cr	Cu	Ni	V	Mo	B	N ppm	Ceq
1	203589203310001	T20215757	2.350 / 5.180,9	GZRES	DX51D+Z	2.50 / 0,098	1000 / 39,37	2500 / 98,425	BR	A	C	Z060	286	388	30						0,090	0,440	0,019	0,013	0,020	0,037	0,001								

Açıklama/Remarks

Kontrol Eden / Controlled By
Mekanik Test Laboratuvarı / Mechanical Test Laboratory

Onaylayan / Approved
Kalite Kontrol Departmanı / Quality Control Department

Sertifika Notu / Explanation

Yukarıda listelenen ürünlerin sipariş şartlarına ve ürün standartlarına uygun olduğunu beyan ederiz.
We certify that products listed above in accordance with the order requirements and product standart.
Bu test raporu EN 10204 standardı madde 5e uygun olarak imza olmadan geçerli olacak şekilde sistemsel veri formatında hazırlanmıştır.

TATMETAL

TEST SERTİFİKASI
MILL TEST CERTIFICATE
EN 10204 3.1

Müşteri/Customer : EL+ LTD
Ürün/Product : GZRS
Standart : EN 10346:2015
Gemi Adı/Vessel Name :

Certificate : C20028461
Tarih/Date : 23.10.2020
Sipariş No/Order No : X5000578
Sayfa/Page : 2/2

Row Num	Etiket No/Bobin/Paket Number (IndivuduaCoil / Package Number)	Heat Number	Ağırlık (Weight)	Ürün Tipi (Product Type)	Çelik Kalitesi (Steel Quality)	Kalınlık (Thickness)	Genişlik (Width)	Boy (Length)	Yüzey Tipi (Surface Type)	Yüzey Kalitesi (Surface Quality)	Yüzey Koruma (Surface Protection)	Kaplama Ağr. (Coating Weight)	Mekanik Özellikler (Mechanical Properties)							Kimyasal Bileşim(%) (Chemical Composition%)																
			Kg / Pound			mm / Inch	mm / Inch	mm / Inch				(gr / M2)	Re (N/mpa/KSI)	Rm (N/mpa/KSI)	A (%)	r90	n90	rm	nm	Sertlik Hardness (hrb)	C	Mn	P	S	Si	Al	Ti	Nb	Cr	Cu	Ni	V	Mo	B	N ppm	Ceq
1	203584453310001	T20215649	2.790 / 6.150,9	GZRS	DX51D+Z	1.60 / 0,063	1250 / 49,213	2500 / 98,425	M	B	C	Z100	291	370	37						0,050	0,230	0,013	0,010	0,024	0,032	0,005								
2	203584453310002	T20215649	2.830 / 6.239,1	GZRS	DX51D+Z	1.60 / 0,063	1250 / 49,213	2500 / 98,425	M	B	C	Z100	291	370	37						0,050	0,230	0,013	0,010	0,024	0,032	0,005								
3	203584453310003	T20215649	2.830 / 6.239,1	GZRS	DX51D+Z	1.60 / 0,063	1250 / 49,213	2500 / 98,425	M	B	C	Z100	291	370	37						0,050	0,230	0,013	0,010	0,024	0,032	0,005								
4	203584453310004	T20215649	2.830 / 6.239,1	GZRS	DX51D+Z	1.60 / 0,063	1250 / 49,213	2500 / 98,425	M	B	C	Z100	291	370	37						0,050	0,230	0,013	0,010	0,024	0,032	0,005								
5	203584453310005	T20215649	2.830 / 6.239,1	GZRS	DX51D+Z	1.60 / 0,063	1250 / 49,213	2500 / 98,425	M	B	C	Z100	291	370	37						0,050	0,230	0,013	0,010	0,024	0,032	0,005								
6	203584453310006	T20215649	2.830 / 6.239,1	GZRS	DX51D+Z	1.60 / 0,063	1250 / 49,213	2500 / 98,425	M	B	C	Z100	291	370	37						0,050	0,230	0,013	0,010	0,024	0,032	0,005								
7	203584453310007	T20215649	2.450 / 5.401,3	GZRS	DX51D+Z	1.60 / 0,063	1250 / 49,213	3000 / 118,11	M	B	C	Z100	291	370	37						0,050	0,230	0,013	0,010	0,024	0,032	0,005								
8	203584453310008	T20215649	2.450 / 5.401,3	GZRS	DX51D+Z	1.60 / 0,063	1250 / 49,213	3000 / 118,11	M	B	C	Z100	291	370	37						0,050	0,230	0,013	0,010	0,024	0,032	0,005								

Açıklama/Remarks

Kontrol Eden / Controlled By
Mekanik Test Laboratuvarı / Mechanical Test Laboratory

Onaylayan / Approved
Kalite Kontrol Departmanı / Quality Control Department

Sertifika Notu / Explanation

Yukarıda listelenen ürünlerin sipariş şartlarına ve ürün standartlarına uygun olduğunu beyan ederiz.
We certify that products listed above in accordance with the order requirements and product standart.
Bu test raporu EN 10204 standardı madde 5e uygun olarak imza olmadan geçerli olacak şekilde sistemsel veri formatında hazırlanmıştır.

TATMETAL

TEST SERTİFİKASI
MILL TEST CERTIFICATE
EN 10204 3.1

Müşteri/Customer : EL+ LTD
Ürün/Product : GZRS
Standart : EN 10346:2015
Gemi Adı/Vessel Name :

Certificate : C20020881
Tarih/Date : 12.08.2020
Sipariş No/Order No : X5000515
Sayfa/Page : 1/1

Row Num	Etiket No/Bobin/Paket Number (IndivudualCoil / Package Number)	Heat Number	Ağırlık (Weight)	Ürün Tipi (Product Type)	Çelik Kalitesi (Steel Quality)	Kalınlık (Thickness)	Genişlik (Width)	Boy (Length)	Yüzey Tipi (Surface Type)	Yüzey Kalitesi (Surface Quality)	Yüzey Koruma (Surface Protection)	Kaplama Ağr. (Coating Weight)	Mekanik Özellikler (Mechanical Properties)								Kimyasal Bileşim(%) (Chemical Composition%)																
			Kg / Pound			mm / Inch	mm / Inch	mm / Inch				(gr / M2)	Re (N/mpa/KSI)	Rm (N/mpa/KSI)	A (%)	r90	n90	rm	nm	Sertlik Hardness (hrb)	C	Mn	P	S	Si	Al	Ti	Nb	Cr	Cu	Ni	V	Mo	B	N ppm	Ceq
1	203308203320001	T20209835	2.320 / 5.114,7	GZRS	DX51D+Z	1.00 / 0,039	1250 / 49,213	2500 / 98,425	M	B	C	Z100	346	425	28						0,044	0,196	0,023	0,011	0,031	0,023	0,002									
2	203310553320001	T20209899	2.100 / 4.629,7	GZRS	DX51D+Z	1.00 / 0,039	1250 / 49,213	2500 / 98,425	M	B	C	Z100	282	366	36						0,040	0,250	0,016	0,004	0,023	0,040	0,000									
3	203310553320002	T20209899	2.100 / 4.629,7	GZRS	DX51D+Z	1.00 / 0,039	1250 / 49,213	2500 / 98,425	M	B	C	Z100	282	366	36						0,040	0,250	0,016	0,004	0,023	0,040	0,000									
4	203310553320003	T20209899	2.100 / 4.629,7	GZRS	DX51D+Z	1.00 / 0,039	1250 / 49,213	2500 / 98,425	M	B	C	Z100	282	366	36						0,040	0,250	0,016	0,004	0,023	0,040	0,000									
5	203310553320004	T20209899	2.100 / 4.629,7	GZRS	DX51D+Z	1.00 / 0,039	1250 / 49,213	2500 / 98,425	M	B	C	Z100	282	366	36						0,040	0,250	0,016	0,004	0,023	0,040	0,000									
6	203310553320005	T20209899	2.100 / 4.629,7	GZRS	DX51D+Z	1.00 / 0,039	1250 / 49,213	2500 / 98,425	M	B	C	Z100	282	366	36						0,040	0,250	0,016	0,004	0,023	0,040	0,000									
7	203310553320006	T20209899	2.100 / 4.629,7	GZRS	DX51D+Z	1.00 / 0,039	1250 / 49,213	2500 / 98,425	M	B	C	Z100	282	366	36						0,040	0,250	0,016	0,004	0,023	0,040	0,000									
8	203310573320001	T20209899	2.100 / 4.629,7	GZRS	DX51D+Z	1.00 / 0,039	1250 / 49,213	2500 / 98,425	M	B	C	Z100	276	360	24						0,040	0,250	0,016	0,004	0,023	0,040	0,000									
9	203310573320002	T20209899	2.100 / 4.629,7	GZRS	DX51D+Z	1.00 / 0,039	1250 / 49,213	2500 / 98,425	M	B	C	Z100	276	360	24						0,040	0,250	0,016	0,004	0,023	0,040	0,000									
10	203310703320001	T20209906	2.040 / 4.497,4	GZRS	DX51D+Z	1.00 / 0,039	1250 / 49,213	2500 / 98,425	M	B	C	Z100	313	398	24						0,058	0,210	0,011	0,021	0,020	0,032	0,001									
11	203310703320002	T20209906	2.190 / 4.828,1	GZRS	DX51D+Z	1.00 / 0,039	1250 / 49,213	2500 / 98,425	M	B	C	Z100	313	398	24						0,058	0,210	0,011	0,021	0,020	0,032	0,001									

Açıklama/Remarks

Kontrol Eden / Controlled By
Mekanik Test Laboratuvarı / Mechanical Test Laboratory

Onaylayan / Approved
Kalite Kontrol Departmanı / Quality Control Department

Sertifika Notu / Explanation

Yukarıda listelenen ürünlerin sipariş şartlarına ve ürün standartlarına uygun olduğunu beyan ederiz.
We certify that products listed above in accordance with the order requirements and product standart.
Bu test raporu EN 10204 standardı madde 5e uygun olarak imza olmadan geçerli olacak şekilde sistemsel veri formatında hazırlanmıştır.

序号 Item	名称 Part name	材料 Material	数量 QTY.
1	平头 Flat tip	SUS201	2
2	固定芯 Fixed pin	SUS201	1
3	页片1 Leaf 1	SUS201	1
4	轴承 Ball bearing	SUS201	2
5	页片2 Leaf 2	SUS201	1
6	M5机丝 Machine screws	SUS201	8

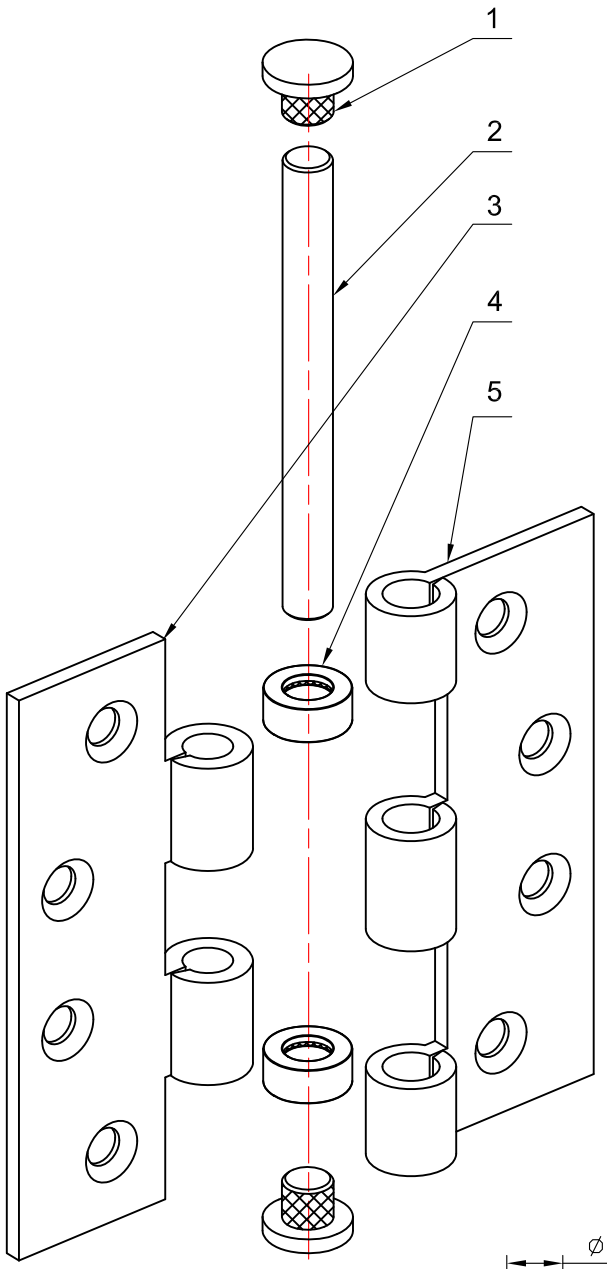

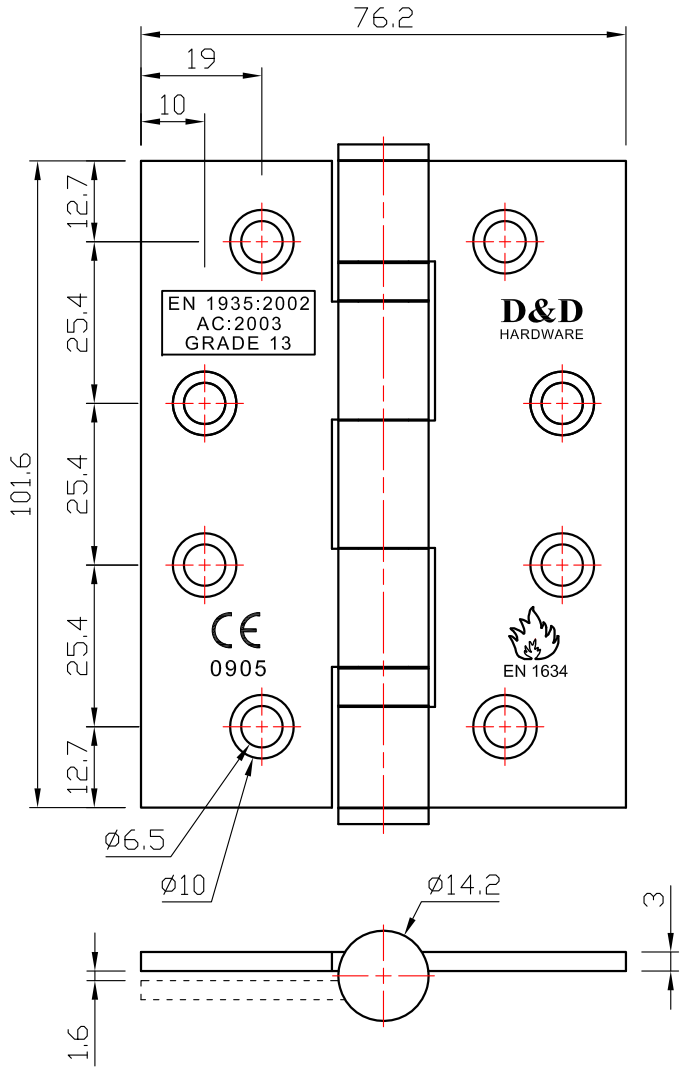



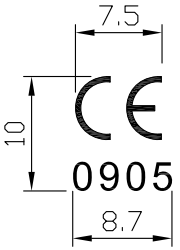

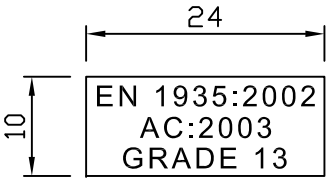

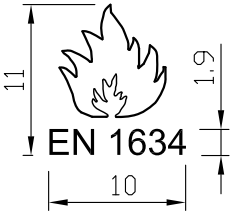

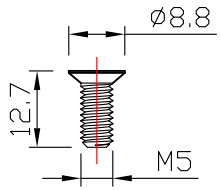

M5机丝
Machine screws
8 pcs

File number: 21/23426-439

锐新五金 D&D HARDWARE			合同号 Contract			
			产品名称 Item	合页 Door hinge	订单数量 Quantity	
绘 图 Drawn	May	2020.04.21	产品型号 Model	DDSS001	主要材质 Main Material	SS201
审 核 Check by	Jobby	2020.04.21	产品规格 Size	4x3x3.0-2BB	配件材质 Accessories Material	SS201
批 准 Approved by	David	2020.04.21	产品表面 Finish		视图方向: 3D Angle Projection:	

dormakaba



TS 71

The inexpensive solution for standard doors – With quality assured

With the TS 71, dormakaba has developed a door closer that rounds off its Classic Line series perfectly. The ease and speed with which it can be fixed, the fact that its spring strength can be so easily adapted to the door size – by simply turning round the hinge plate – and its competitive price should make it the ideal choice for your application.
Certified to ISO 9001

Benefits

For the trade
- Increased stocking flexibility thanks to use of the standard ClassicLine series arm.
- Complements the ClasscLine series as a competitive model for standard doors.

For the installer
- Non-handed design.
- Easy and quick to fix.

For the architect/specifier
- Competitive and reliable.
- Compact construction combined with classic design.

For the user
- Constant closing action virtually unaffected by temperature fluctuations.
- Optimum closing speed adjustment with two regulating valves.
- Reliable closing with adjustable latching action.

certifire

The dormakaba TS 71 is CERTIFIRE approved (Certificate No. CF 268) for door types ITT 120 and MM/IMM 240

Data and features		TS 71
Spring strength (adjustable by turning round the hinge plate)	Size	EN 3/4
Standard doors ≤ 1100 mm[1)]		●
External doors, outward opening		–
Fire doors		●
Non-handed		●
Arm type	Standard	●
	Slide channel	–
Closing speed adjustable at 2 separate valves	180° – 15°	●
	115° – 10°	
Latching action adjustable (by arm)		●
Backcheck		–
Delayed action		–
Hold-open		O
Weight in kg		1.2
Dimensions in mm	Length	232
	Overall depth	245
	Height	68
Door closer tested and approved to EN 1154		●
CE Marked		●

● = Yes – = No O = Option

[1)] With parallel-arm fixing, the closing force is approx. 20 Nm (for doors up to 950 mm)

Standard and optional functions

1 Closing speed adjustable in the range 180° – 15°.
2 Closing speed adjustable in the range 15° – 0°.
3 Latching action.
4 Hold-open range for model with hold-open arm (optional extra).

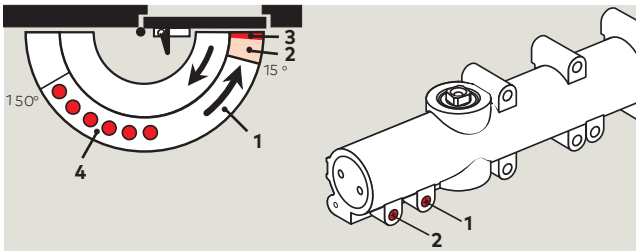

Closing force settings

Door width	Setting
≤ 950	EN 3
≤ 1100	EN 4

With the TS 71, the spring strength (size setting) of the closer is adjusted to the door width concerned by merely turning round the hinge plate.

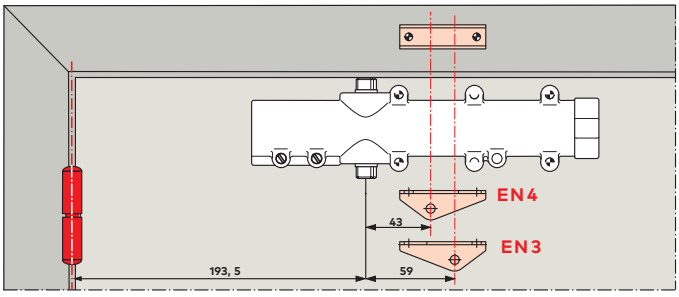

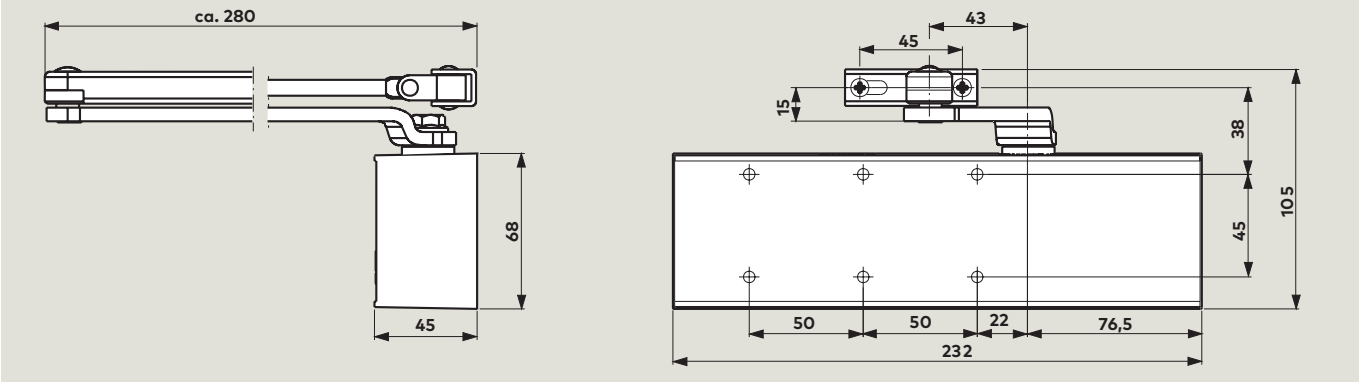

Applications and fixing details

Door leaf fixing, pull side

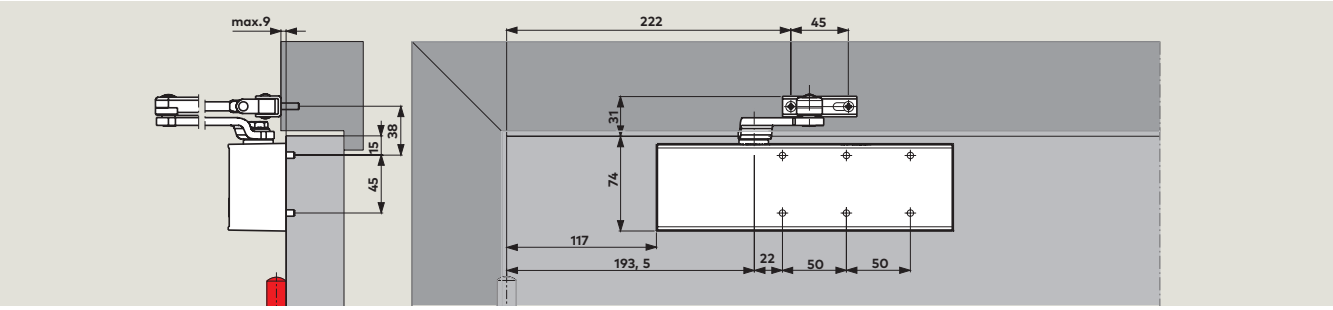

(Example refers to left-hand [ISO 6] door; mirror image applies to right-hand [ISO 5] door)

Transom fixing (overhead frame installation), push side

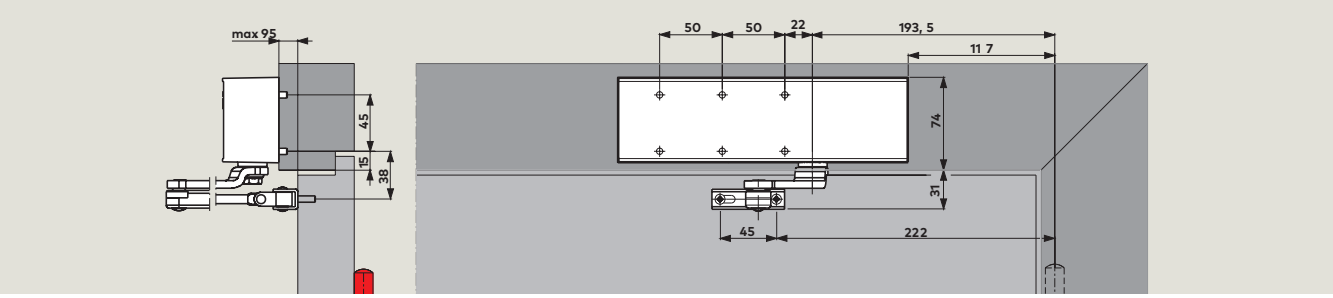

(Example refers to left-hand [ISO 6] door; mirror image applies to right-hand [ISO 5] door)

Parallel-arm fixing, push side

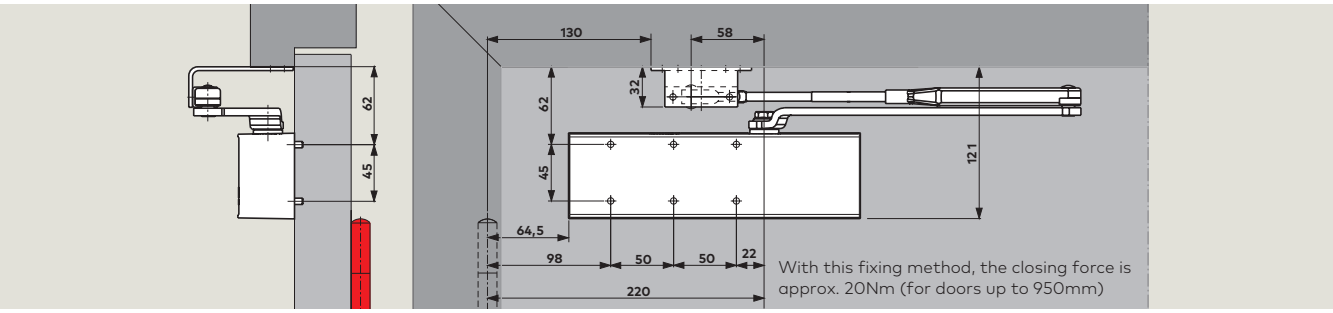

(Example refers to left-hand [ISO 6] door; mirror image applies to right-hand [ISO 5] door). Parallel-arm bracket (accessory) necessary

Standard equipment and accessories

Order No.:
■ = Closer body with arm and fixing bracket for parallel-arm assembly

\# = Accessory

Colour	xx
Silver	01
Gold	02

Also available in Stainless Steel, Polished Chrome, Polished Brass and Coloured

Closer body TS71	Standard arm	Parallel-arm bracket	Hold-open arm	Mounting backplate
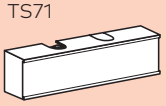			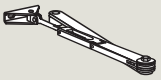	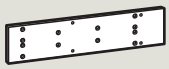
			220025xx	220021xx
Size EN 3/4 (PA Size 3)	■ 222124xx		#	#

Specification text

Rack-and-pinion door closer with adjustable closing force, size EN 3 or 4, closing speed adjustable in two independent ranges, with adjustable latching action. Non-handed. Tested and approved to EN 1154.

Model

☐ With standard arm and fixing bracket for parallel-arm assembly

Accessories

☐ Hold-open arm
☐ Mounting backplate

Colour

☐ Silver 01
☐ Gold 02
☐ Also available in Stainless Steel, Polished Chrome, Polished Brass and Coloured

Make

dormakaba TS71

WN 051 802 51532, GB, 02/18
Subject to change without notice.

dormakaba UK & Ireland

E: info.gb@dormakaba.com

Wilbury Way, Hitchin
Hertfordshire
SG4 0AB
T: +44(0)1462 477600
F: +44(0)1462 477601

Lower Moor Way
Tiverton, Devon
EX16 6SS
T: +44(0)870 000 5625
F: +44(0)870 000 5627

Europäisch notifizierte Stelle
Kennnummer 0736
European notified body
Identification number 0736

DGUV Test
Prüf- und Zertifizierungsstelle
BG Verkehr
Dienststelle Schiffssicherheit

EG-Baumusterprüfbescheinigung (Modul B)

EC-Type Examination (Module B) Certificate

Zulassungs-Nr. *Certificate No.* **118337-01**

Hersteller (Antragsteller) *Manufacturer (Applicant)*	Weiss Chemie + Technik GmbH & Co. KG	
Adresse *Address*	Hansastraße 2 35708 Haiger (Deutschland / *Germany*)	
Ausrüstung (Nummer & Bezeichnung) *Equipment* *(Number & Item designation)*	MED/3.18e	Oberflächenwerkstoffe und Bodenbeläge mit geringem Brandausbreitungsvermögen (beim Bau von Trennflächen vom Typ "A", "B" und "C" verwendete Klebstoffe) *Surface materials and floor coverings with low flame-spread characteristics (adhesives used in the construction of "A", "B" & "C" class divisions)*
Produkttyp *Product Type*	**COSMO PU-160.260**	
Produkteinschränkung *Product Restriction*	n/a *n/a*	
Prüfgrundlage *Specified Standard*	IMO-Entschließung MSC.307(88)-(FTP-Code 2010) Anlage 1, Teil 5 *IMO Resolution MSC.307(88)-(FTP-Code 2010) Annex 1, Part 5*	

Die auf den folgenden Seiten aufgeführten Bedingungen sind Bestandteil dieses Zertifikats.
Diese Baumusterprüfbescheinigung gilt, solange sie nicht entzogen oder widerrufen wird und die Gegenstände unverändert, einsatzfähig eingesetzt werden.
The listed conditions on following pages are part of this certificate.
This certificate remains valid unless cancelled or revoked, provided the conditions on following pages are complied with and the equipment remains satisfactory in service.
On this certificate the German text shall prevail.

Hiermit wird bestätigt, dass:
This is to certify that:
Die BG Verkehr - Dienststelle Schiffssicherheit die entsprechenden EG-Bauartzulassungsverfahren zur Bewertung angewendet hat und das genannte Baumuster den einschlägigen Brandschutz-Bestimmungen der Richtlinie 2014/90/EU (Schiffsausrüstung) in der jeweils geltenden Fassung, zuletzt geändert durch die Durchführungsverordnung (EU) 2018/773, vorbehaltlich der im Zertifikat genannten Auflagen, entspricht.
BG Verkehr - Ship Safety Division did undertake the relevant type approval procedures for the equipment identified below which was found to be in compliance with the Fire protection requirements of Marine Equipment Directive (MED) 2014/90/EU, as amended by Commission Implementing Regulation (EU) 2018/773 subject to any conditions in the schedule attached hereto.

Ausstellungsdatum *Date of issue*	**07.01.2019**
Ablaufdatum *Expiry date*	**06.01.2024**

Unterschrift (Hackl)
Signature

Postanschrift:
BG Verkehr
Dienststelle Schiffssicherheit
Brandstwiete 1
D-20457 Hamburg

Tel: +49 40/3 61 37 - 0
Fax: +49 40/3 61 37 2 04
Internet: www.deutsche-flagge.de

Zulassungsbedingungen / *condition of approval:*

Note 1: Dieses Zertifikat wird ungültig, wenn der Hersteller Änderungen oder Modifikationen jeglicher Art am zugelassenen Produkt durchgeführt hat, die nicht der benannten Stelle gemeldet und mit ihr abgestimmt wurden.
This certificate becomes invalid if the manufacturer makes any changes or modifications to the approved equipment, which have not been notified to, and agreed with the notified body named on this certificate.

Note 2: Sollten spezielle Regeln oder Prüf-Standards für die o.g. Ausrüstung während der Gültigkeit des Zertifikates geändert werden, muss das Produkt neu getestet werden, bevor es nach Inkrafttreten der Änderungen an Bord geliefert wird.
Should the specified regulations or standards be amended during the validity of this certificate, the product(s) is/are to be re-approved prior to it/they being placed on board vessels to which the amended regulations or standards apply.

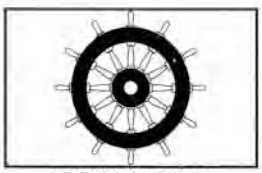
XXXX / YYYY

Note 3: Das Konformitätskennzeichen darf an o. g. zugelassener Ausrüstung nur angebracht und eine "Declaration of Conformity" vom Hersteller nur ausgestellt werden, wenn die Qualitätssicherungsmodule (D, E oder F) des Anhangs II der Richtlinie voll eingehalten und durch die „benannte Stelle" im Rahmen eines schriftlichen Vertrages mit dem Hersteller überwacht werden.
The Mark of Conformity may only be affixed to the above type approved equipment and a Manufacturer's Declaration of Conformity issued when the Quality assurance module (D, E or F) of Annex II of the Directive is fully complied with and controlled by a written inspection agreement with a notified body.

Note 4: "Steuerrad" Format
YYYY Die vierstelligen Ziffern des Jahres, in dem das Konformitätskennzeichen angebracht wurde.
XXXX Kennnummer der benannten Stelle, die die Qualitätssicherung beim Hersteller überwacht

"Wheelmark" Format
YYYY The year in which the mark is affixed.
XXXX Notified Body number undertaking surveillance module

Note 5: Die an Bord von Seeschiffen zur Verwendung kommende Ausrüstung muss mit der geprüften Ausrüstung in seiner Zusammensetzung und seinen Eigenschaften übereinstimmen.
The equipment installed on board ships shall comply in every respect with the Marine equipment which has been tested.

Note 6: Die in den Handel kommende Schiffsausrüstung sind entsprechend Artikel 10 der Richtlinie 2014/90/EU des Rates vom 23. Juli 2014 über Schiffsausrüstung zu kennzeichnen.
The equipment shall be marked in accordance with Article 10 of the Council Directive 2014/90/EU of 23 July 2014 on Marine Equipment as amended.

Note 7: Diese EG-Baumusterprüfbescheinigung darf nur in vollem Wortlaut veröffentlicht oder Dritten zugänglich gemacht werden.
This EC-Type Examination Certificate may only be published or transmitted unabridged.

Europäisch notifizierte Stelle
Kennnummer 0736
European notified body
Identification number 0736

Bestimmungsgemäße Verwendung / *intended purpose*:

Schwerentflammbarer Klebstoff entsprechend:
SOLAS 74/88 Reg. II-2/3, II-2/5, II-2/9 und X/3, neueste Fassung, IMO-Entschließung MSC.36(63)-(1994 HSC-Code) 7, IMO-Entschließung MSC.97(73)-(2000 HSC-Code) 7
Adhesive with low flame-spread characteristics complying with:
SOLAS 74/88 Reg. II-2/3, II-2/5, II-2/9 and X/3, as amended, IMO Resolution MSC.36(63)-(1994 HSC-Code) 7, IMO Resolution MSC.97(73)-(2000 HSC-Code) 7

Mitgeltende Unterlagen / *further applicable documents*:

- Prüfbericht Nr. 2013-2225 von "Exova Warringtonfire", 65926 Frankfurt am Main (DE), ausgestellt am 13.11.2013
- Test Report No. 2013-2225 issued by "Exova Warringtonfire", 65926 Frankfurt am Main (DE), on 13.11.2013

Technische Daten / *technical characteristics:*

Nassauftragsmenge des 1-komponentigen Klebstoffes: max. 150 g/m²
Quantity of wet application of the 1-component adhesive: max. 150 g/m²

Farbe: Gelblich
Colour: yellowish

Weitere Bedingungen und Auflagen / *additional conditions and remarks*:

Das Produkt kann auf jedem nichtbrennbaren Trägermaterial aufgebracht werden.
The product can be applied to any non-combustible substrate.

---------- ENDE DES DOKUMENTS ----------
---------- END OF DOCUMENT ----------

COSMO PU-160.260

****COSMOPUR 1527D*

1-C-PUR-Adhesive

Examples for Application

- Manufacture of sandwich and apron elements
- Bonding of surfaces
- Diverse industrial fields

Special Properties

- semi-hard adhesive joint
- Low beating away in the mineral wool
- Solvent-free
- High foam volume!
- Very short pressing times
- It features an especially wide range of application possibilities on different materials
- Good adhesion characteristics to several types of material surfaces, e.g. PVC-hard, GRP (ground), Alu, HPL etc. on diverse insulating materials, e.g. PUR-, PS-foam and mineral wool after appropriate preparation of the surfaces
- Good bonding strength at heat
- Good weather-proofness
- Low flame-spread characteristics when hard-dry

Certificates / Test reports

BG Verkehr, Dienststelle Schiffssicherheit / Ship Safety Division

Approved for the application on ships in accordance with module B

Approval No.: 118337-01

Applied quantity: max 150 g/m²

0736
20XX*
* year of manufacture

The fire test as per IMO FTPC and approval of the system COSMO PU-160.260 were executed without pre-treatment of the surfaces to be glued with COSMO primers, and without the addition of COSMO accelerators.

Technical Data

Basis	1-C-humidity-cross-linking polyurethane
Colour hard-dry	brown
Viscosity as per cone and plate (300 s^{-1}) at +20 °C	approx. 8 500 mPa.s
Density as per EN 542 at +20 °C	approx. 1.14 g/cm³
Skinning time - dry at +20 °C, 50 % r. H., applied quantity 500 µm-PE/PVC	approx. 21 min
Skinning time - wet at +20 °C, sprayed with water; applied quantity 500 µm-PE/PVC	approx. 16 min
Pressing time mineral wool/metal sheet at +60 °C	approx. 3 min
Curing time at +20 °C, 50 % r. H. until approx. 75 %	approx. 24 h
Curing time at +20 °C, 50 % r. H. until it reaches the final strength	approx. 7 d
Applied quantity depending on carrier material	approx. 100-350 g/m²
Processing temperatures adhesive and substrates	from +5 °C to +30 °C

Weiss Chemie + Technik GmbH & Co. KG
Hansastraße 2
D-35708 Haiger

Tel.: +49 (0) 2773 / 815 - 0
Fax: +49 (0) 2773 / 815 - 200
Email: ks@weiss-chemie.de
Web: www.weiss-chemie.de

Industrieverband Klebstoffe e.V.

made by Weiss

General Information

Paint the bonded workpieces only after the adhesive has cured completely; if they are painted too early, formation of paint bubbles cannot be excluded.

If permanent humidity impact is expected, the bonded joints/bonded surfaces must additionally be sealed/protected using a "suitable sealant".

Bonding of materials with different longitudinal extension must be assessed regarding their long-term behaviour, especially when they are exposed to fluctuating temperature ranges.

The cured mass changes its colour due to UV radiation but not its strength in the cured bonded joint.

Caution: the viscosity of the 1-C-PUR adhesives is approximately twice as high at +15 °C as at +25 °C.

Observe the following instructions when taking it out of drums or containers: Dry the after-flowing air, e.g. by means of desiccant cartridges, to prevent curing in the trading units.

Skinning, joining times, as well as the required press and following processing times can only be determined accurately by self-tests because they depend on material, temperature, applied quantity, air humidity, material humidity, thickness of adhesive film, press power, and other criterions. For processing, appropriate safety allowances shall be planned in addition to the specified guiding values.

Preparation

Acclimatise the product before the application.

The surfaces of the workpieces to be bonded must be dry, and free from dust and grease.

Depending on the material surface, check if the bonding result can be improved by grinding or applying of primer.

Polyolefins (among others PE, PP) cannot be bonded without preparation, e.g. plasma- or corona treatment. If PS-hard surfaces are bonded, generally we recommend using a primer.

Bonding

The adhesive is homogeneously applied on one of the surfaces of the parts to be bonded using a spatula, or a bead application unit, within the skinning time.

To ensure a controlled curing process when non-absorbent materials or materials with an internal humidity of <8 % are bonded, the adhesive film is sprayed with water (approx. 10 g water/m² at 150 g adhesive/m²)

To reduce the pressing time up to 20 % of the PU-accelerator COSMO SP-900.120 are added to the reaction water, if necessary.

After that, the workpieces will be put together within the skinning time and pressed with a stacking pressure of 0.015 N/mm² until they have reached the functional strength.

If covering layers are laid, make sure that no air is enclosed, provide for air vent in the adhesive joint, if necessary.

Remove oozing adhesive when it is fresh.

Bonding of metals

Bonding of aluminium, copper, brass: only on chemically pretreated or varnished surfaces; these materials cannot be durably bonded to be age-resistant without appropriate pre-treatment of the surfaces to be glued.

Due to the difficult definition of aluminium surfaces and qualities, we generally recommend gathering sufficient information from the supplier to prepare the planned bonding process optimally; sufficient qualification tests are required.

Due to their variety, age and, if necessary, additional treatment with oil or wax, anodized surfaces do not allow any general statement about wettability or bonding characteristics of these bonding surfaces.

If stainless steel is manufactured or processed, auxiliary aids, e.g. wax, oil, etc, are often used, that usually cannot be removed by simple wiping away; it turned out that after the cleaning with solvent-based cleaning agents a clearly better bonding result will be achieved after grinding, or better sand blasting, of the surface and following cleaning with solvent.

Galvanized sheet metals must generally be protected from stagnant humidity that is permanently acting on it "formation of white rust". In this case, it must be excluded that occurring humidity can get onto the bonding surface.

weiss
Weiss Chemie + Technik GmbH & Co. KG
Hansastraße 2
D-35708 Haiger
Tel.: +49 (0) 2773 / 815 - 0
Fax: +49 (0) 2773 / 815 - 200
Email: ks@weiss-chemie.de
Web: www.weiss-chemie.de

Powder coatings with shares of PTFE cannot be bonded reliably without pre-treatment (e. g. plasma procedure).

Bonding of wood

Bonding of larch: If larch is bonded outdoors, generally 1-C-PUR-adhesives may not be used. Substances, included in the wood or possibly generated, e.g. "Arabicum Galactan", considerably destroy/weak the bonding strength . No problems are known for PVAc- and EPOXI adhesives.

If solid wood is bonded, the adhesive should preferably be applied on the two surfaces to be bonded. The press pressure shall be >1 N/mm².

If solid wood is bonded for outdoor application, perform appropriate tests to achieve optimum bonding depending on wood type, weathering intensity, surface protection and dimensions of adhesive joints.

Important instructions

Only instructed personnel in specialist firms are allowed to use the product!

Our user instructions, processing guidelines, product- and performance data, and other technical statements are only general directives; they describe only the condition of our products (values, determination of values on the date of completion) and the performances do not represent a warranty in the sense of § 443 BGB. Because of the wide variety of applications of the individual product and the relevant special conditions (e. g. processing parameters, material characteristics, etc.), it is up to the user to test it itself; our free expert advice for application provided in speech, writing, and as test is nonbinding.

Please, also consider the Safety Data Sheet!

Cleaning

Storage of application devices in COSMO CL-300.270 prevents/slows down the curing time of the adhesive.

Remove the fresh, not cured adhesive from the surfaces and the tools using COSMO CL-300.150.

The tools are cleaned with COSMO CL-300.220 .

Cured adhesive can only be removed mechanically.

Storage

Store the hermetically closed original trading units in a dry place at temperatures of +15 °C to +25 °C no direct sun radiation.

While transported within the usual transport times, the product may not be exposed to temperatures of -30 °C to +35 °C.

Storage life in unopened original packagings: 6 Months

During the storage time, viscosity is increasing, reactivity is decreasing.

Packaging

Sizes of trade units on request.

Accessories

COSMO CL-300.270 – Cleaning agent for application devices/ machines

COSMO CL-300.220 – Cleaner for machine

Weiss Chemie + Technik GmbH & Co. KG
Hansastraße 2
D-35708 Haiger
Tel.: +49 (0) 2773 / 815 - 0
Fax: +49 (0) 2773 / 815 - 200
Email: ks@weiss-chemie.de
Web: www.weiss-chemie.de

TEKNİK BİLGİ DÖKÜMANI / *TECHNICAL DATA SHEET*

TAŞYÜNÜ LEVHA / *STONEWOOL BOARD*

Ürün Adı / ***Product Name:***	TAŞ YÜNÜ LEVHASI / ***STONE WOOL BOARD***
Standart ***I Standard:***	TS EN 13162+A1 Isı yalıtım ürünleri -Binalarda kullanılan - Fabrika yapımı mineral yün (MW) ürünler ***Thermal insulation products for buildings - Factory made mineral wool (MW) products***
Tanımı / ***Description:***	Taş yünü-Bazalt taşının 1350°C-1400°C'de ergitilerek elyaf haline getirilmesi sonucu oluşan ısı, ses ve yangın yalıtımı ürünü ***Mineral wool - Thermal insulation material formed by melting of basalt stone at 1350°C-1400°C into fiber -For thermal, sound and fire insulation***
Kullanım Alanları / ***Areas of Usage:***	Isı, ses yalıtımı ve yangın güvenliği amacıyla ara bölme olarak kullanılmaktadır. ***Used for thermal, sound and fire insulation for partition walls.***

ÖZELLİKLER ***PROPERTIES***	SEMBOL ***SYMBOL***	BİRİM ***UNIT***	TOLERANSLAR ***TOLERANCES***	DEĞER ***VALUE***	STANDART ***STANDARD***
Malzeme / ***Material***	MW				TS EN 13162
Yoğunluk / ***Density***	d	kg/m³	(+,-)% 10	80	TS EN 1602
Uzunluk ***I Length***	l	mm	(+,-) %2	1200	TS EN 822
Genişlik / ***Width***	b	mm	(+,-) %1,5	600	TS EN 822
Gönyeden Sapma / ***Determination of Squareness***	Sb	mm	Max 5mm	2 mm	TS EN 824
Yüzey düzlüğü / ***Determination of Flatness***	$S_{emçok}$	mm	Max 3mm	1,8 mm	TS EN 825
Boyutsal Kararlılık / ***Determination of Dimensional Stability***	DS (T+)	mm	%	<1	TS EN 1604
Kalınlık / ***Thickness***	d_N	mm	(- 1, +3)	50	TS EN 823
Ortalama Isıl İletkenlik Değeri / ***Declared Thermal Conductivity (10 °C)***	λort	W/mK		max. 0,035	TS EN 12667
Yangın Tepki Sınıfı / ***Reaction to fire***				A1	TS EN 13501-1
Isıl Direnç Beyan Değerleri / ***Thermal Resistance***	RD	m²K/W		1,43	TS EN 13162
Azami Kullanım sıcaklığı / ***Max. Operating Temperature***		°C		760	
Erime Noktası / ***Melting point***		°C		>1000	DİN 4102
Su Buharı Difüzyon Direnç faktörü / ***Water Vapor Diffusion Resistance Coefficient***	μ		1	1	TS EN 12086
Kısa süreli su emme / ***Short Term Water Absorption***	W_P	kg/m²	< 1	< 1	TS EN 1609
Uzun süreli su emme Uzun süreli su emme / ***Long Term Water Absorption***	W_{ip}	kg/m²	< 3	< 3	TS EN 12087
Sertifikalar / ***Certificates***	CE (SERT.NO:1020-CPD-010028090) ,ISO 9001,ISO 14001,ISO 18001,ISO 50001				
Ürün anahtarı / ***Product Key***	MW-TS EN 13162-T5-DS(T+)				
Kaplama ***I Facing***	Siyah,sarı camtülü ya da alüminyum folyo,kraft kağıt kaplamalı ***Black/yellow glass tissue, aluminum foil, craft facing***				

DEPOLAMA / *STORAGE*

Depolama alanında ürün paketleri yer ile direkt temas ettirilmemeli en az bir palet üzerine konulmalıdır.
Product packages should be placed on at least one pallet which should not be in direct contact with the ground at storage area.

Ürün paketleri depolanacağı alanda su, rutubet ve güneş ışığından korunmalıdır.
Product packages should be protected from water, moisture and sunlight in the storage area.

Paketleri taşıma esnasında cilt, göz ve üst solunum sistemini koruyucu uygun iş güvenlik kıyafeti ve ekipmanları kullanılmalıdır.
Appropriate work safety clothing and equipment must be used to protect the skin, eye and upper respiratory system during transport.

Ürünler sevk edilirken üzerileri mutlaka branda ile örtülmelidir.
Products must be covered with a tarpaulin when shipped.

Ürünlerin üzerine pakete ve ürüne zarar verecek şekilde herhangi bir malzeme bırakılmamalıdır.
Do not leave any material on the products in such a way as to damage the package and the product.

Paletli ürünler üst üste konularak sevk edilmemeli ve depolanmamalıdır.
Palletized products should not be stacked and stored on top of each other.

Açılan ambalajlar çöpe atılmamalı, yerel yönetmeliklere uygun şekilde bertaraf edilmelidir.
The opened packages must not be disposed of and must be disposed of in accordance with the regulations.

Deneyler TÜRKAK tarafından akredite TEKNOVASYON laboratuvarında yapılmıştır.
All experiments have been carried out by TEKNOVASYON laboratory which is accredited by TÜRKAK.

Soudafoam FR Gun

Technical data

Basis	Polyurethane
Consistency	Stable foam, thixotropic
Curing system	Moisture curing
Skin Formation (FEICA TM 1014)	9,5 min
Cutting Time (FEICA TM 1005)	55 min
Density**	Ca. 25 kg/m³
Sound insulation (EN ISO 717-1)	62 dB
Thermal conductivity (λ) (EN 12667)	0,033 W/m.K
Box Yield (FEICA TM 1003)	750 ml yields ca. 37 l of foam
Joint Yield (FEICA TM 1002)	750 ml yields ca. 24 m of foam
Shrinkage after curing (FEICA TM 1004)	< 8 %
Expansion after curing (FEICA TM 1004)	None
Expansion during curing (FEICA TM 1010)	Ca. 40 %
Compressive strength (FEICA TM 1011)	Ca. 52 kPa
Shear strength (FEICA TM 1012)	Ca. 47 kPa
Temperature resistance**	-40 °C till +90 °C (cured)

** This information relates to fully cured product.
Soudal NV uses test methods approved by FEICA designed to deliver transparent and reproducible test results, ensuring customers have an accurate representation of product performance. FEICA OCF test methods are available at: http://www.feica.com/our-industry/pu-foam-technology-ocf . FEICA is a multinational association representing the European adhesive and sealant industry, including one-component foam manufacturers. Further information at: www.feica.eu

Product description
Soudafoam FR Gun is a one-component, self-expanding, ready to use polyurethane foam, where the canister is provided with a thread so it can be used on a gun. Soudafoam FR Gun is a PU-foam with fire retardant characteristics according to the European standard EN 1366-4. Because of the Duravalve, the optimal yield remains over the entire shelf life, even when stored or transported lying down.

Properties
- Fire resistant in a joint (EN 1366-4)
- High filling capacity
- Good adhesion on all surfaces (except PE, PP and PTFE).
- High insulation value, thermal and acoustic
- Very good bonding properties.
- CE marked (ETAG 026)
- Gas- and flame proof up to 240 minutes in a joint
- Water resistant (not watertight)
- Not UV-resistant

Applications
- Installation of fireproof doors and windows.
- Sealing of fire retardant joints in walls and ceiling.
- As part of the 'Soudal Fire Range' assortment for penetration seals and joints.
- Sealing of all openings in roof constructions.
- Apply of an acoustic baffle
- All foam applications in static joints.

Packaging
Colour: pink
Packaging: 750 ml aerosol (net)

Shelf life
12 months unopened and stored in dry and cool conditions (Between 5 and 25 °C), Upright storage is recommended.

Remark: This technical data sheet replaces al previous versions. The directives contained in this documentation are the result of our experiments and of our experience and have been submitted in good faith. Because of the diversity of the materials and substrates and the great number of possible applications which are out of our control, we cannot accept any responsibility for the results obtained. Since the design, the quality of the substrate and processing conditions are beyond our control, no liability under this publication is accepted. In every case it is recommended to carry out preliminary experiments. Soudal reserves the right to modify products without prior notice.

Soudafoam FR Gun

Application method
Shake the aerosol can for at least 20 seconds. Fit the gun on the adapter. Surface should be free from grease and dust. Moisten surfaces with a water sprayer prior to application. For non-conventional substrates a preliminary adhesion test is recommended. Fill holes and cavities for 65 %, as the foam will expand. Repeat shaking regularly during application. If you have to work in layers repeat moistening after each layer. Fresh foam can be removed using Soudal Gun & Foamcleaner or acetone. Prior to using the Gun & Foamcleaner, test whether surfaces are affected or not. Especially plastics and lacquer or paint layers can be sensitive to this. Cured foam can only be removed mechanically or with Soudal PU-Remover.

Can temperature: +5 °C - 30 °C
Ambient temperature: +5 °C - 30 °C.
Surface temperature: +5 °C - 35 °C

Health- and Safety Recommendations
Take the usual labour hygiene into account. Always wear gloves and goggles. Remove cured foam mechanically. Never burn away. Consult label and material safety data sheet for more information. When vaporizing (for example with a compressor), additional security measures will be required. Use only in well ventilated areas.

Standards and certificates
- European Technical Approval Soudafoam FR - ETA 13/0280
- CE-marked (BCCA - EC conformity CPR)
- Joint Sound Reduction Test by IFT
- Various test and classification reports in various accredited testing institutes: IFT Rosenheim, ITB Poland, Warrington Fire Gent, Warrington Fire Australia, Efectis Netherlands, Efectis France, CSTB France, CSI Italy.
- Testresults for penetration seals and/or joints with Soudafoam FR Gun are freely accessible in the ‘Fire Range Application manual Penetration seals and Joints’ on the Soudal Website. The corresponding certificates can be obtained through the Soudal sales representatives or trough the Soudal Website.

Remark: This technical data sheet replaces al previous versions. The directives contained in this documentation are the result of our experiments and of our experience and have been submitted in good faith. Because of the diversity of the materials and substrates and the great number of possible applications which are out of our control, we cannot accept any responsibility for the results obtained. Since the design, the quality of the substrate and processing conditions are beyond our control, no liability under this publication is accepted. In every case it is recommended to carry out preliminary experiments. Soudal reserves the right to modify products without prior notice.

PYROPLEX®
FIRE CONTAINMENT

DATASHEET

Application:	Fire resisting doorset
Fire resistance period:	30 to 60 minutes
Insulation/integrity:	Integrity
Approval type:	Certifire CF355

Intumescent Strip – Fire Only

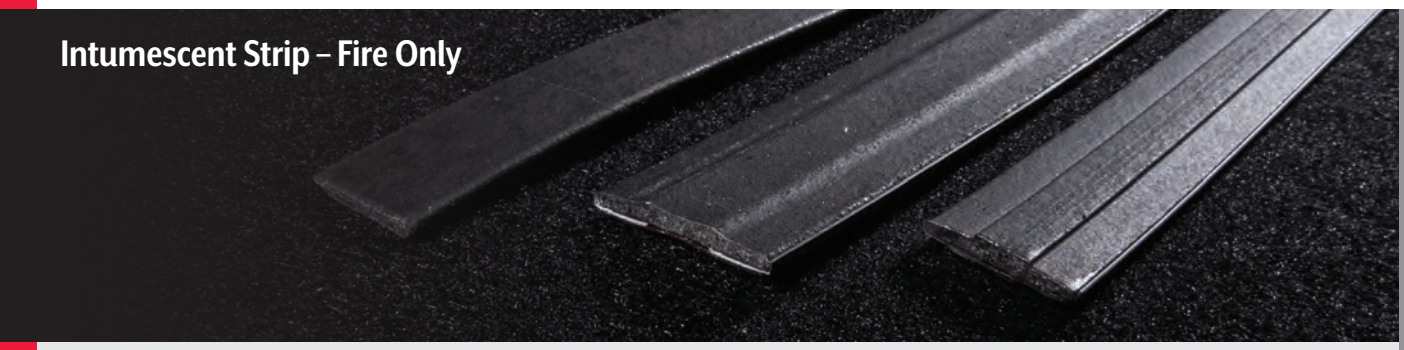

PRODUCT PROFILES:

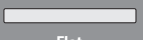

Flat
No adhesive



Flat
With adhesive

Pyroplex® Intumescent Strip provides a basic intumescent seal for fire rated metal and timber door leaves and frames. It is also ideal for general gap filling in buildings eg. suspended floors, soffits and ducting. It can be fitted under door hinges, locks and closers.

Pyroplex® Intumescent Strips are ideal for new build and retro-fit applications. And supplied in a continuous coil to minimise wastage and is quick and easy to fit as no special tools are required. They are supplied with a high grade acrylic self-adhesive tape backing for ease of application.

Certifire Certificate No. CF355.

FIELD OF APPLICATION

Pyroplex® Intumescent Strip has been specifically designed for use in the following applications:

- Surface mounted applications.
- For use single and double action timber doors.
- Insulated and non-insulated steel doors and frame.
- New build and retro-fit applications.

PRODUCT FEATURES

- May be supplied with or without an acrylic self-adhesive backing.
- Supplied on continuous reels for dispensing applications.
- Pyroplex® intumescent material is high-pressure and multi-directional.
- Pyroplex® intumescent material is totally unaffected by water, robust, 'non-flaking' and difficult to tear.
- Pyroplex® intumescent material is black in colour.

PRODUCT DATA

Profile size [mm]	Strip - no adhesive	Strip with self-adhesive	Metres per coil	Indicative fire resistance
10 x 2.0	8196	30086	250m	30 mins
10 x 2.5	–	8492	250m	30 mins
15 x 2.0	8366	30085	200m	30 mins
15 x 2.5	–	8501	200m	30 mins
20 x 2.0	8212	30074	200m	30 mins
20 x 2.5	–	8921	150m	30 mins
25 x 2.0	8294	30142	100m	30 mins
25 x 2.5	–	8934	100m	30 mins
28 x 3.0	–	–	100m	60 mins
30 x 2.0	8432	30075	100m	60 mins
30 x 2.5	–	8958	75m	60 mins
45 x 2.0	8241	–	50m	60 mins
45 x 2.5	–	8456	50m	60 mins
45 x 4.0	–	30187	25m	60 mins
50 x 2.0	–	30146	50m	60 mins

INSTALLATION INSTRUCTIONS

1. Clean the substrate to remove surface oils, failure to remove surface greases may result in a delamination or poor adhesion to the substrate.
2. Remove the self-adhesive backing liner from the Intumescent Strip and apply the product to the substrate.
3. To achieve excellent adhesion seals must be applied to clean, dry surfaces at temperatures between +5°C and +40°C.

QUALITY APPROVAL

Pyroplex Limited has a Quality Management System that meets the requirements of ISO 9001, and is independently verified by BSI Quality Assurance under Certificate No. FM10371. Copies of this approval are available on request.

OTHER INFORMATION

The information contained herein is based upon the present state of our knowledge. Recipients of our Pyroplex® products must take responsibility for observing existing laws and regulations.

Due to our policy of continuous improvement Pyroplex Limited reserves the right to amend specifications without prior notice.

Pyroplex Limited, The Furlong, Droitwich, Worcestershire WR9 9BG, UK
Tel: +44 [0]1905 795432 **Fax:** +44 [0]1905 795662 **Email:** info@pyroplex.com
www.pyroplex.com

File number 01/20126438
Page

certifire

bsi. ISO 9001:2015 Quality Management FM 10371

bsi. ISO 14001:2015 Environmental Management EMS 637894

Feb 2018

TECHNICAL DATA:

PRODUCT TESTING

The Pyroplex® range of Fire Door Seals have been extensively tested in the UK, Europe and worldwide, to national and international standards. Compliant with the requirements given in Certifire TS35 – Certifire CF355.

TECHNICAL DATA

Chemical composition: The active element is high-pressure forming, multi-directional expandable graphite contained within a high performance durable polymer.

Adhesive performance: Adhesive type: High performance modified acrylic.

Thickness: 205 microns.

Temperature resistance: +200°C short term, +100°C long term.

Tensile strength: >30N/15mm.

Humidity resistance: Very good.

Solvent resistance: Very good.

Ageing resistance: Very good.

Life cycle: 10 years, providing the seal is installed in accordance with the requirements given in this guidance notes.

MAINTENANCE AND INSTALLATION RECORDS

As this product is not subject to routine and replacement programmes, Pyroplex Limited recommend that all firestopping materials are checked on a regular basis to ensure that the product remains integral. Replace and fit any damaged components to reinstate the fire resistance.

PRODUCT GUARANTEE AND TRACEABILITY

Providing the product is installed in accordance with the requirements of the guidance document the product is guaranteed for a period of 10 years.

TECHNICAL SUPPORT AND GUIDANCE

Should you require any further information regarding this product please contact Pyroplex Limited or visit our website, **www.pyroplex.com**

MATERIAL SAFETY DATA:

COMPOSITION/INFORMATION ON INGREDIENTS

Chemical nature: Thermoplastic element composition containing intercalated graphite in a synthetic compound with the addition of fillers and process oils. Provided with a semi rigid backing, may be supplied with or without an acrylic self-adhesive backing.

POSSIBLE HAZARDS

Principle hazards: Not subject to decree of hazardous substances.

Critical hazard to man and environment: Not applicable.

FIRST AID MEASURES

On skin contact: Not applicable.

On contact with eyes: Not applicable.

On ingestion: Not applicable.

If inhaled: Not applicable.

FIRE FIGHTING MEASURES

Pyroplex® intumescent material is self-extinguishing.

Suitable extinguishing media: Water, foam, powders and dry extinguishing media.

Special protective equipment: Suitable forms of PPE [personal protective equipment]. Avoid inhalation of smoke or fumes.

In the event of fire, contact the appropriate emergency services for assistance.

ACCIDENTAL RELEASE MEASURES

Personal precaution: Not applicable.

Environmental precaution: Not applicable.

Methods for cleaning up: No special measures necessary.

HANDLING AND STORAGE

Handling: No special requirements.

Storage: Store in a cool, dry place [not above +35°C] and ensure sufficient ventilation.

EXPOSURE CONTROLS AND PERSONAL PROTECTION

Respiratory protection: None normally required.

Hand protection: Not applicable.

Eye protection: Not applicable.

Skin protection: Not applicable.

PHYSICAL AND CHEMICAL PROPERTIES

Intumescent element	Solid
Colour	Black
Odour	Acidic

STABILITY AND REACTIVITY

Conditions to be avoided: Thermal decomposition above +300°C.

Hazardous decomposition products: Thermal decomposition, fumes contain Hydrogen Chloride. However, the activated graphite is effective at removing aromatic particles from smoke emissions.

TOXICOLOGICAL INFORMATION

Acute toxicity: Not applicable in solid state.

ECOLOGICAL INFORMATION

General advice: Observe the legal provisions regarding the prevention of ground water and surface water as well as air. Do not discharge product into natural waters without pre-treatment.

DISPOSAL CONSIDERATIONS

Recommendations: Disposal by means in accordance with local regulations e.g. suitable deposition.

TRANSPORT INFORMATION

Transport hazards: No regulations apply for the transport of this material. Not classified as hazardous for road, rail, sea or air transport.

REGULATORY INFORMATION

Labelling according to EEC directives	
National legislation/regulation	Not applicable
VbF classifications	None
Water hazard class	Not applicable

Pyroplex Limited, The Furlong, Droitwich, Worcestershire WR9 9BG, UK
Tel: +44 [0]1905 795432 **Fax:** +44 [0]1905 795662 **Email:** info@pyroplex.com
www.pyroplex.com

File number 21/23126/439
Page

certifire
FM 10371
EMS 637894

Feb 2018

MATERIAL SAFETY DATA SHEET

RUBBER COMPOUND 6EP3001 (FC-30)

DATE: 31/08/2007
REVISION DATE: 21/03/2018

according to 1907/2006/EC, Article 31

1 IDENTIFICATION OF THE SUBSTANCE/MIXTURE AND THE COMPANY/ UNDERTAKING

1.1. PRODUCT NAME: EPDM/CSM/IIR rubber compound 6EP3001 (FC-30)

1.2. RELEVANT IDENTIFIED USES OF THE SUBSTANCE OR MIXTURE AND USES ADVISED AGAINST

INTENDENT USE: Sponge EPDM/CSM/IIR rubber compound, density 300 g/dm^3, for vulcanization rubber goods

RESTRICTIONS ON USE: Not specified

1.3. DETAILS OF THE SUPPLIER OF THE SAFETY DATA SHEET:

SANOK RC S.A.
ul. Przemyska 24
38-500 Sanok, Poland
phone: 0048 13 465-48-00
fax. 0048 13 465-48-01
www.sanokrubber.pl
e-mail: slawomir.lis@sanokrubber.pl

1.4. EMERGENCY PHONE NUMBER:
0048 13 465-48-03

2 HAZARDS IDENTIFICATION

2.1 CLASSIFICATION OF THE SUBSTANCE OR MIXTURE

1272/2008/EU classification
Substance is not classified as dangerous for the human's life or health.
EUH208 – The mixture contain: diphenylthiourea, zinc, dibutyldithiocarbamate and zinc, diethyldithiocarbamate. It may cause allergic reaction.
Aquatic Chronic 2, H411 – Toxic to aquatic life with long lasting effects.

2.2 LABEL ELEMENTS

Pictograms or hazard symbols
Not required

Signal words or hazard statemets
Not required

Precautionary statements
Not required

2.3 OTHER HAZARDS

Not stated compatibility with the criteria PBT or vPvB according to Annex XIII of the REACH regulation.

3 COMPOSITION/INFORMATION ON INGREDIENTS

3.1. SUBSTANCES:

Not applicable.

3.2. MIXTURES:

Classification of the hazardous components:

Name	Content (%)	No. CAS	No. UE	No REACH	Classification acc. to 1272/2008/WE
Zinc oxide	<4.2	1314-13-2	215-222-5	01-2119463881-32-0064	Aquatic Acute 1 Aquatic Chronic 1 H400, H410
C,C'-azodi(formamide)	<1.6	123-77-3	204-650-8	01-2119493056-35	SVHC Resp. Sens. 1 H334
Calcium oxide	<1.0	1305-78-8	215-138-9	01-2119475325-36-0000	Eye Dam. 1 STOT SE 3 Skin. Irrit. 2 H318, H335, H315
Zinc, dibutylthio-carbamide	<0.6	136-23-2	205-232-8	01-2119535161-51-XXXX	Aquatic chronic 1 Skin irrit. 2 Eye irrit. 2 Skin sens. 1 STOT SE 3 H410, H315, H319, H317, H335
Sulphur	<0.7	7704-34-9	231-722-6	01-2119487295-27-XXXX	Skin Irrit. 2 H315
Zinc, diethyldithio-carbamide	<0.23	14726-36-4			Tox. Acute 4; H302 Eye Irrit. 2; H319 STOT SE 3; H335 Skin Irrit. 2; H315 Skin Sens. 1; H317 Aquatic Acute 1; H400 Aquatic Chronic 1; H410
Diphenylthiourea	<0.6	102-08-9	203-004-2		Acute Tox. 1 Skin Sens. 1 H300, H310, H317
Dibutyl-dithiophosphate, zinc salt	<0.25	6990-43-8	230-257-6	01-2119971644-29-0000	Skin Irrit. 2 Eye Irrit. 2 Aquatic Chronic 2 H315, H319, H411

4 FIRST-AID MEASURES:

4.1. DESCRIPTION OF FIRST AID MEASURES:

INHALATION:
In case of inhalation of smoke or fumes from overheated or burning rubber compound, provide fresh air. If necessery provide medical assistace.

SKIN:
In case of contact with the hot product, burned part of the body rinse immediately with the planty of cold water; cover with the layer of watt or gauze, provide medical assistance. Do not try to rip off melted fabric or clothes from the skin because of the risk of skin mutilation.

EYES:
Unlikely case, remove contamination from the eye, rinse with the water.

INGESTION:
Unlikely case, provide medical assistance.

4.2. MOST IMPORTANT SYMPTOMS AND EFFECTS, BOTH ACUTE AND DELAYED

INHALATION:
In high concentrations may cause severe irritation with pulmonary edema. Symptoms may be worse and can include significant shortness of breath, central nervous system disorder and collapse. Symptoms may appear with delay and are subject to progressive intensity.

SKIN:
May cause skin irritation followed with prolonged or repeated contact. In sensitive individuals, a consequence of exposure to small amounts of sensitizing components may develop a rash. Contact with hot product may cause thermal burns resulting in permanent damage to the skin.

EYES:
Decomposition products can cause eye irritation. Contact with hot product may cause thermal burns resulting in permanent damage to the eyes.

INGESTION:
It is estimated that does not cause harmful effects following ingestion.

4.3. INDICATION OF ANY IMMEDIATE MEDICAL ATTENTION AND SPECIAL TREATMENT NEEDED

In case of any doubt or symptoms persist, consult a doctor.

5 FIREFIGHTING MEASURES:

5.1 EXTINGUISHING MEDIA:

water, foam, powder, carbon dioxide. Do not use concetrated streem of water – possible spreading of the fire.

5.2 SPECIFIC HAZARDS ARISING FROM THE SUBSTANCE OR MIXTURE:

In case of fire could exhale carbon oxides, nitrogen oxides, sulphur oxides, HCN, black smokes. Avoid to inhale products of combustion.

5.3 ADVICE FOR FIREFIGHTERS:

Wear a complete protecting equipment, including self contained breathing apparatus.

6 ACCIDENTAL RELEASE MEASURES:

6.1 PERSONAL PRECAUTIONS, PROTECTIVE EQUIPMENT AND EMERGENCY PROCEDURES:

Not required.

6.2 ENVIRONMENTAL PRECAUTIONS:

Not required.

6.3 METHODS AND MATERIAL FOR CONTAINMENT AND CLEANING UP:

Dispose according to local regulations.

6.4 REFERENCE TO OTHER SECTIONS

The protective equipment and clothing - see section 8.
Disposal of waste – see section 13 and 15.

7 HANDLING AND STORAGE:

7.1 PRECAUTIONS FOR SAFE HANDLING:

Avoid direct contact with the mixture. Use the personal protective equipment.

7.2 CONDITIONS FOR SAFE STORAGE, INCLUDING ANY INCOMPATIBILITIES:

Store in cool, dry and dark places, away from heating sources.

7.3 SPECIFIC END USE:

No information about specific end use.

8 EXPOSURE CONTROLS / PERSONAL PROTECTION

8.1 CONTROL PARAMETERS:

Under normal circumstances of processing and application, exposure to the components of this product is unlikely. All components are firmly bound in the polymerized matrix which has a negligible vapor pressure. Therefore, it poses little potential risk in terms of exposure by inhalation or ingestion. It is possible exposure through the skin following skin contact.
Concentration limits of substances - the product components in biological material:
Not specified.
DNEL substances - components of the product under conditions of acute and chronic exposure:
Not specified.
PNEC substances - components of the product for the aquatic environment and biological sewage treatment plants:
Not specified.

8.2 EXPOSURE CONTROL:

HAND PROTECTION:

wear protective gloves

EYE PROTECTION:

wear protective googles

SKIN PROTECTION:

protective long-sleeved clothing

HYGIENE MEASURES:

Wash thoroughly hand after handling, do not breathe fumes evolving during process and from the hot finished product.

9 PHYSICAL AND CHEMICAL PROPERTIES:

9.1 INFORMATION ON BASIS PHYSICAL AND CHEMICAL PROPERTIES:

APPEARANCE: RIBBONS OR PLATES
COLOUR: BLACK
ODOUR: SPECIFIC

MELTING POINT/RANGE:	deg. C	not applied
DENSITY:	g/cm^3	1.22

FLASH POINT:	deg. C	> 250 ^{O}C
EXPLOSIVE PROPERTIES (IN AIR):	vol. %	not applied
SOLUBILITY IN WATER:	g/l	insoluble
SOLUBLE IN:		Aliphatic and aromatic hydrocarbons, ketones, esters

10 STABILITY AND REACTIVITY

10.1 REACTIVITY:

The product is not reactive under normal storage and use.

10.2 CHEMICAL STABILITY:

The product is stable under normal storage and use.

10.3 POSSIBILITY OF HAZARDOUS REACTIONS:

Not known.

10.4 CONDITIONS TO AVOID:

Protect from temperatures above 250 °C and oxidizing agents**.**

10.5 INCOMPATIBLE MATERIALS:

Strong oxidizing agents, reducing agents.

10.6 HAZARDOUS DECOMPOSITION PRODUCTS:

Hydrocarbons, organic acids, aldehydes, alkoholes, carbon oxides, nitrogen oxides, sulphur oxides, amines, HCN.

11 TOXICOLOGICAL INFORMATION:

11.1 INFORMATION ON TOXICOLOGICAL EFFECTS:

a) Acute toxicity:

The mixture is not classified as hazardous in this class

b) Skin corrosion / irritation:

The mixture is not classified as hazardous in this class

c) Serious eye damage / irritation:

The mixture is not classified as hazardous in this class

d) Sensitizing effect on respiratory system or skin:

The mixture contain: diphenylthiourea, zinc, dibutyldithiocarbamate and zinc, diethyldithiocarbamate. It may cause allergic reaction.

e) The activities of germ cell mutagenicity:

There is no data available. The mixture is not classified as hazardous in this class

f) Carcinogenic effect

The mixture is not classified as hazardous in this class

g) The harmful effect on reproduction

There is no data available. The mixture is not classified as hazardous in this class

h) Repeated dose toxicity

There is no data available. The mixture is not classified as hazardous in this class

i) Aspiration hazard

There is no data available. The mixture is not classified as hazardous in this class

Delayed and immediate and chronic effects from short- and long-term exposure

Points of absorption into the body:

No data available.

The effects of acute exposure:

See section 4.2. The product is not classified as hazardous under conditions of acute exposure.

The effects of chronic exposure:

See section 4.2. The product is not classified as hazardous under conditions of chronic exposure.

Additional information:

The major components of this product, after vulcanization are not present in their original form. The final polymerized product is inert rubber. It is estimated that under normal circumstances there will be no exposure to the primary components of the product. Similarly, as in case of most high molecular weight polymers, they are not known, harmful health effects of acute or chronic exposure. During combustion or heat the product above 200 °C, can produce irritating and toxic fumes, which types depends on temperature and combustion conditions. The effects of exposure to these substances are varied and can be manifested as transient to severe irritation of eyes, skin and respiratory tract with pulmonary edema, headaches, dizziness, nausea and many other effects. Some of the components of the thermal decomposition product may be absorbed through the skin and are toxic to significant absorption. Dust can irritate the respiratory system, skin and eyes. Repeated exposure to high concentrations of dust may cause lung damage. Inhalation of dust may result in inhibition of removing toxic particles from the lung by diminishing the activity of macrophages pulmonary bubbles.

12 ECOLOGICAL INFORMATION:

12.1 TOXICITY

Acute toxicity to aquatic

There is no data available. Using the calculating method, it is estimated that the product is not dangerous for the environment.
Do not allow the discharge of larger quantity to the water and sewage system.

Chronic toxicity to the aquatic environment

There is no data available. Using the calculating method, mixture is classified as chronically toxic category 2.

Toxicity to microorganisms

There is no data available.

Toxicity to organisms in the terrestrial environment

There is no data available.

Toxicity to the atmospheric environment

There is no data available.

12.2 PERSISTENCE AND DEGRADABILITY

There is no data available.

12.3 BIOACCUMULATIVE POTENTIAL

There is no data available.

12.4 MOBILITY IN SOIL

There is no data available. Mixture not soluble in water.

12.5 RESULTS OF PBT AND vPvB ASSESMENT

There is no data available.

12.6 OTHER ADVERSE EFFECTS

There is no data available.

13 DISPOSAL CONSIDERATIONS:

13.1 WASTE TREATMENT METHODS:

Disposal should be made in accordance with federal, state and local regulations.

14 TRANSPORT INFORMATION:

14.1 UN number

not stated

14.2 UN proper shipping name

not stated

14.3 Transport hazard class(es)

not restricted

14.4 Packing group

not restricted

14.5 Environmental hazards

not stated

14.6 Special precautions for user

not stated

14.7 Transport in bulk according to Annex II of MARPOL 73/78 and the IBC Code

not restricted

Further information: This product is not classified as dangerous in transportation. Separate from foods.

15 REGULATORY INFORMATION:

15.1 SAFETY, HEALTH AND ENVIRONMENTAL REGULATIONS/LEGISLATION SPECIFIC FOR THE SUBSTANCE OR MIXTURE

The product is not hazardous in the form in which it is sold as long as all the hazardous components are included in the polymer matrix. The mixture does not need to be labelled.

15.2 CHEMICAL SAFETY ASSESSMENT

Chemical safety assessment is not prepeared

16 OTHER INFORMATION:

EXPLANATION OF SYMBOLS FROM SECTION 3:

H statements:

H400 – Very toxic to aquatic life.
H410 – Very toxic to aquatic life with long lasting effects.
H317 – May cause an allergic skin reaction.
H318 – Causes serious eye damage.
H335 – May cause respiratory irritation.
H315 – Causes skin irritation.
H332 – Harmful if inhaled.
H302 – Harmful if swallowed.
H373 – May cause damage to organs through prolonged or repeated exposure cause the hazard.
H319 – Causes serious eye irritation.
H335 – May cause respiratory irritation.
H330 – Fatal if inhaled.

Information contained in this Material Safety Data Sheet is believed to be reliable but no representation guarantee or warranties of any kind are made as to its accuracy, suitability for a particular application or results to be obtained from them. It is up the user to ensure that the information contained in the Material Safety Data Sheet is relevant to the product manufactured, handled or sold by him as the case may be. Stomil Sanok S.A. makes no warranties, expressed or implied in respect of adequacy of this document for any particular purpose.

LGAI Technological Center, S.A. (APPLUS)
Polígono industrial del Henares
C/Nitra, 3. Nave 106 D. Cp. 19004 Guadalajara
T +34 949 750690
www.appluslaboratories.com

Title:
Fire resistance classification report assigned to three hinged metal single leaf doors, exposed to fire on one of their faces, in accordance with the procedure given in the Standard EN 13501-2:2016.

Material tested:

- Three hinged metal single leaf doors, two with reference ELP-FPD-SL- Single Leaf Fire Panic door and one with reference ELP-FD-SL-Single Leaf Fire door.

The reference of the samples has been provided by the sponsor.

The test specimens have been provided by LTD EL+.

File number: 21/23426-439-1

Sponsor:
LTD EL+
Beri Gabriel Salosi St. 126
Tbilisi Georgia

Report date:
5 August 2021

The reproduction of this document is only authorised if it is made in its totality. Electronically signed reports in digital format are considered original documents, as well as its electronic copies. Their printing has no legal validity.
This document includes 10 pages.

LGAI Technological Center S.A. Inscrita en el registro Mercantil de Barcelona, Tomo 35.803, Folio1, Hoja Nº B-266.627 Inscripción 1ª C.I.F.: A-63207492

1 INTRODUCTION

This classification report defines the fire resistance classification assigned to three elements:

Internal Laboratory reference	Reference provided by the sponsor
21/439-A	ELP-FPD-SL- Single Leaf Fire Panic door
21/439-B	ELP-FD-SL-Single Leaf Fire door
21/439-C	ELP-FPD-SL- Single Leaf Fire Panic door

in accordance with the procedure given in the Standard EN 13501-2:2016 *"Fire classification of construction products and building elements. Part 2: Classification using data from fire resistance tests, excluding ventilation services"*, three hinged metal single leaf doors, provided by LTD EL+.

2 DETAILS OF THE CLASSIFIED ELEMENTS

2.1 General

The tested elements with reference ELP-FPD-SL- Single Leaf Fire Panic door and ELP-FD-SL-Single Leaf Fire door are defined as three hinged metal single leaf doors, exposed to fire on one side (one door opens inwards the furnace and others outwards the furnace).

2.2 Description

The tested elements, with reference ELP-FPD-SL- Single Leaf Fire Panic door and ELP-FD-SL-Single Leaf Fire door, are fully described in the test report in support of classification listed in section 3.

3 TEST REPORT

File number	21/234262-439
Laboratory	LGAI Technological Center, S.A. (APPLUS)
Sponsor	LTD EL+
Test date	26 April 2021
Test Standard	EN 1634-1:2014+A1:2018: Fire resistance and smoke control tests for door and shutter assemblies, openable windows and elements of building hardware – Part 1: Fire resistance test for door and shutter assemblies and openable windows*

***This Standard corresponds to the current version on test date. Results obtained in this test are the ones used in this classification report.**

4 DETAILS AND TEST RESULTS

4.1 Details of the test

File number	**21/23426-439**
Parameter	**Details**
Temperature-time curve	$T = 345\ \log_{10}(8t + 1) + 20$
Supporting construction	Low density rigid supporting construction made of cellular concrete blocks of 150 mm thick and density of 475-525 kg/m^3 (carried out by the Laboratory).
No. of exposed sides	1 side one door (21/439-B) 2 sides one door (21/439-A and 21/439-C)
Exposed side	21/439-A: opening inwards the furnace. 21/439-B: opening outwards the furnace. 21/439-C: opening outwards the furnace.

4.2 Results

21/439-A	**ELP-FPD-SL- Single Leaf Fire Panic door (hinges inside the furnace)**	
Criterion	**Failure minute**	**Reason**
Integrity	41	Sustained flame in panic bar.
Thermal insulation	21	Thermocouple no. 28 records an increase in temperature greater than 180 ºC above the initial average temperature.

21/439-B	**ELP-FD-SL-Single Leaf Fire door (hinges inside the furnace)**	
Criterion	**Failure minute**	**Reason**
Integrity	133	Maintained throughout the test, 133 minutes.
Thermal insulation	23	Average temperature records an increase in temperature greater than 140ºC above the initial mean temperature.

21/439-C	**ELP-FPD-SL- Single Leaf Fire Panic door (hinges outside the furnace)**	
Criterion	**Failure minute**	**Reason**
Integrity	53	Sustained flame in upper left corner.
Thermal insulation	25	Average temperature records an increase in temperature greater than 140ºC above the initial mean temperature.

5 CLASSIFICATION

5.1 Reference of classification

These classifications have been carried out in accordance with Clause 7 of the Standard EN 13501-2:2016.

5.2 Classification

Door 21/439-A:

Hinged metal single leaf door reference ELP-FPD-SL-Single Leaf Fire Panic door, opening inwards the furnace (hinges inside the furnace)	**EI_2 20 E 30**

Door 21/439-B:

Hinged metal single leaf door reference ELP-FD-SL-Single Leaf Fire door, opening outwards the furnace (hinges outside the furnace)	**EI_2 20 E 120**

Door 21/439-C:

Hinged metal single leaf door reference ELP-FPD-SL-Single Leaf Fire Panic door, opening outwards the furnace (hinges outside the furnace)	**EI_2 20 E 45**

The decision rule to declare conformance to the specification or standard, is by following a simple binary decision rule. In this case, the upper limit of the probability value of false acceptance or false rejection, according to ILAC G8, is 50%.

Note: in accordance with section 13.3.2 of the Standard EN 1634-1:2014+A1:2018 and taking into account the results reflected in section 4.2 of this classification report, the category which corresponds to each sample is:

21/439-A	Classification	Category
ELP-FPD-SL- Single Leaf Fire Panic door (Opening inwards the furnace, hinges inside the furnace)	EI_2 20	A
	E 30	B

21/439-B	Classification	Category
ELP-FD-SL-Single Leaf Fire door (Opening outwards the furnace, hinges outside the furnace)	EI_2 20	A
	E 120	B

21/439-C	Classification	Category
ELP-FPD-SL- Single Leaf Fire Panic door (Opening outwards the furnace, hinges outside the furnace)	EI_2 20	B
	E 45	B

6 FIELD OF DIRECT APPLICATION (acc/section 13 of the Standard EN 1634-1-2014+A1:2018).

These classifications obtained are directly applicable to the constructions equal to the models tested when one or more of the following modifications are made:

Characteristics	Reference of sample tested*	Modification permitted
Materials/construction	Metal: Leaf (door 21/439-A, 21/439-B, 21/439-C): • Total thickness: 52 mm. • Galvanized steel sheet, thickness 1.0 mm. • Inner composition: see section 3 of report no. 21/23426-439. - Frame (21/439-A, 21/439-C): • Galvanized steel sheet, thickness 1.6 mm, section 56 x 136 mm (width x depth). - Frame (21/439-B): • Galvanized steel sheet, thickness 1.6 mm, section 56 x 116 mm (width x depth). - Weight of door 21/439-A (frame included): 78 kg. - Weight of door 21/439-B (frame included): 80 kg. - Weight of door 21/439-C (frame included): 77.8 kg. (See section 3 of report no. 21/23426-439 for further details)	- The dimensions of the metal wrap around frames may be increased to accommodate increased supporting construction thickness. - The thickness of the metal may also be increases by up to 25%. - The type of metal shall not be changed from that tested.
Decorative finishes	Door 21/439-A, 21/439-B, 21/439-C: - tested without paint finish.	- Permitted to apply paints which do not contribute to the fire resistance on door leaves or frames.
	Door 21/439-A, 21/439-B, 21/439-C: - tested without decorative laminates.	- Decorative laminates and timber veneers up to 1.5 mm thickness may be added to the faces (but not the edges) of doors that satisfy the insulation criteria (normal or supplementary procedure).
Fixings	Door 21/439-A, 21/439-B, 21/439-C: - Frame fixed to the supporting construction by means of 10 screws Ø7 x 140 mm (2 per jamb and 2 on the lintel). (See section 3 of report no. 21/23426-439 for further details)	- The number of fixings per unit length used may be increased but shall not be decreased. - The distance between fixings may be reduced but shall not be increased.

Building hardware	Door 21/439-A, 21/439-B, 21/439-C: - Interchange of building hardware.	- Not covered by the field of direct application.
	Door 21/439-A, 21/439-C: - Lock + panic bar ref. PHA 2101 – 3501421011001 by Dormakaba, upper edge of latch bolt placed at 1090 mm from the bottom edge of the leaf.	- Not covered by direct application.
	Door 21/439-B: - Lock ref. DDML009 by D&D Hardware, upper edge of latch bolt placed at 1115 mm from the bottom edge of the leaf.	- Not covered by direct application.
	Door 21/439-B: - One thumb turn lock ref. DDLK013 by D&D Hardware, centre of bolt placed at 1328 mm from the bottom of the door.	- Not covered by direct application.
	Door 21/439-A, 21/439-B, 21/439-C: - Three hinges ref. CE Mortise Hinge Grade 13 by D&D Hardware, centre placed at 200, 1297 mm from the bottom of the door and at 240 mm from the top of the door.	- The number may be increased but shall not be decreased.
	Door 21/439-A, 21/439-C: - One door closer, ref. TS 71 EN 3/4 – 22212101 by Dormakaba, placed on the exposed side of door 21/439-A and on the unexposed side of door 21/439-C. Door closers are activated for the test.	- No change is allowed.
	Door 21/439-B: - One door closer, ref. TS 71 EN 3/4 – 22212101 by Dormakaba, placed on the unexposed side of door. Door closer is deactivated for the test.	- The doorset may be provided either with or without the closing device.
Size variations	- Door 21/439-A: Hinged metal single leaf door ref. ELP-FPD-SL-Single Leaf Fire Panic door. Classification: 20 minutes (criterion I_2). - Total dim. (width x height): 1000x 2200 mm.	**Application Category «A»** - A reduction to 50% width and 75% height of the tested specimen is the limit of variation.[1] - Size increase is not permitted.

Size variations	- Door 21/439-A: Hinged metal single leaf door ref. ELP-FPD-SL-Single Leaf Fire Panic door. Classification: 30 minutes (criterion E). - Total dim. (width x height): 1000 x 2200 mm.	**Application Category «B»** - A reduction to 50% width and 75% height of the tested specimen is the limit of variation.[1] - Size increase is permitted only up to 15% height, 15% width and 20% area.[2]
	- Door 21/439-B: Hinged metal single leaf door ref. ELP-FD-SL-Single Leaf Fire door. Classification: 20 minutes (criterion I_2). - Total dim. (width x height): 1000 x 2200 mm.	**Application Category «A»** - A reduction to 50% width and 75% height of the tested specimen is the limit of variation.[1] - Size increase is not permitted.
	- Door 21/439-B: Hinged metal single leaf door ref. ELP-FD-SL-Single Leaf Fire door. Classification: 120 minutes (criterion E). - Total dim. (width x height): 1000 x 2200 mm.	**Application Category «B»** - A reduction to 50% width and 75% height of the tested specimen is the limit of variation.[1] - Size increase is permitted only up to 15% height, 15% width and 20% area.[2]
	- Door 21/439-C: Hinged metal single leaf door ref. ELP-FPD-SL-Single Leaf Fire Panic door. Classification: 20 minutes (criterion I_2). - Total dim. (width x height): 1000 x 2200 mm.	**Application Category «B»** - A reduction to 50% width and 75% height of the tested specimen is the limit of variation.[1] - Size increase is permitted only up to 15% height, 15% width and 20% area.[2]
	- Door 21/439-C: Hinged metal single leaf door ref. ELP-FPD-SL-Single Leaf Fire Panic door. Classification: 45 minutes (criterion E). - Total dim. (width x height): 1000 x 2200 mm.	**Application Category «B»** - A reduction to 50% width and 75% height of the tested specimen is the limit of variation.[1] - Size increase is permitted only up to 15% height, 15% width and 20% area.[2]

[1] For smaller doorset sizes the relative positioning of movement restrictors shall remain as tested or any change to the distances between them will be limited to the same percentage reduction as the decrease of test specimen size.

[2] For larger doorset sizes the following shall also apply:
- the height of the upper edge of the latch bolt of the lock shall be equal to or greater than 1090 mm (door 21/439-A and 21/439-C) and 1115 mm (door 21/439-B) from the bottom edge of the leaf of each door, and such increase in height shall be at least proportional to the increase in door height;
- the distance of the centre of the top hinge from the top of door shall be equal to or less than 240 mm.
- the distance of the centre of the bottom hinge from the bottom of the door shall be equal to or less than 200 mm.
- The distance between the bottom of the door and the centre of the middle hinge shall be equal to or greater than 1297 mm.

Supporting construction	Door 21/439-A, 21/439-B, 21/439-C: - Low density rigid supporting construction made of cellular concrete blocks of 150 mm thickness and density of 475-525 kg/m^3 (carried out by the Laboratory).	- Valid for other rigid supporting constructions with a density and thickness equal to or greater than the one tested.
Gaps	- Door 21/439-A: Hinged metal single leaf door ref. ELP-FPD-SL- Single Leaf Fire Panic door. See gaps tested in test report 21/23426-439).*	Maximum size allowed for primary gaps: - Between leaf and lintel (see DETAIL 1): **A: 8.8 mm.** - Between leaf and hinged side (see DETAIL 1): **A: 5.4 mm.** - Between leaf and lock side (see DETAIL 1): **A: 5.9 mm.** - Between leaf and floor: **A: 10.8 mm.** The minimum size of the primary gaps may be reduced.
	- Door 21/439-B: Hinged metal single leaf door ref. ELP-FD-SL-Single Leaf Fire door. See gaps tested in test report 21/23426-439).*	Maximum size allowed for primary gaps: - Between leaf and lintel (see DETAIL 1): **A: 8.3 mm.** - Between leaf and hinged side (see DETAIL 1): **A: 5.0 mm.** - Between leaf and lock side (see DETAIL 1): **A: 5.3 mm.** - Between leaf and floor: **A: 8.5 mm.** The minimum size of the primary gaps may be reduced

Gaps	- Door 21/439-C: Hinged metal single leaf door ref. ELP-FPD-SL- Single Leaf Fire Panic door. See gaps tested in test report 21/23426-439).*	Maximum size allowed for primary gaps: - Between leaf and lintel (see DETAIL 1): **A: 7.1 mm.** - Between leaf and hinged side (see DETAIL 1): **A: 6.8 mm.** - Between leaf and lock side (see DETAIL 1): **A: 5.7 mm.** - Between leaf and floor: **A: 11.4 mm.** The minimum size of the primary gaps may be reduced.
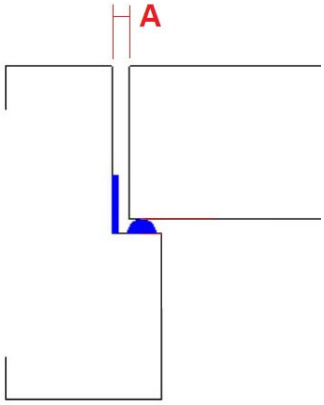 DETAIL 1		

* The reference values of the samples tested not indicated in this section are described in section 3 "Samples tested" of file 21/23426-439.

The modifications permitted in the field of direct application are based on data included in the test report no. 21/23426-439.

The period of validity is the one stated in the product certification system.

This classification document does not represent type approval or certification of the product.

P.A.

Fire Resistance Testing Technician	Fire Laboratory Responsible
LGAI Technological Center, S.A.	LGAI Technological Center, S.A.

The results of the tests carried out refer only and exclusively to the sample tested, and in the moment and under the conditions indicated herein.

LGAI Technological Center, S.A. is not responsible for the information supplied by the sponsor.

Service Quality Guarantee

Applus+, guarantees that this task has been carried out following the exigencies of our Quality and Sustainability System, complying with the contractual conditions and legal regulation.

Within the framework of our improvement programme, we appreciate any comment you may deem appropriate, addressing them to the responsible who signs this document or to the Quality Director of Applus+, to the e-mail address: satisfaccion.cliente@applus.com

Efectis

EFECTIS ERA AVRASYA TEST VE BELGELENDİRME A.Ş.
Dilovası OSB 5. Kısım Fırat Caddesi No:18
41455 Dilovası KOCAELİ
www.efectis.com

TEST CERTIFICATE

The related reaction to fire test was carried out at Efectis Era Avrasya Test Laboratories on 23th February 2018 in accordance with EN 13501-1:2007+A1:2009 standard for the product as described below::

" COLD ROOM WALL PANEL 100 mm "

Fire behaviour		Smoke production			Flaming droplets	
B	-	s	1	,	d	0

Placed on the market by

DAVUT PANEL SAC SAN. TİC. A.Ş.
HACI SABANCI ORGANİZE SANAYİ BÖLGESİ BAKLALI YOLU SARIÇAM/ADANA/TURKEY

And Produced in the Factory

DAVUT PANEL SAC SAN. TİC. A.Ş.
HACI SABANCI ORGANİZE SANAYİ BÖLGESİ BAKLALI YOLU SARIÇAM/ADANA/TURKEY

This test certificate is a declaration of the test results and does not represent any type approval or certification of the product. All details related to product specifications and field of application are described in the classification report Nr. ERA-18-009

This certificate is initially valid until 28th February 2019 providing that no significant modifications are made in technical specification of the specimen and related test and classification standards.

Ali BAYRAKTAR
Laboratory Manager
28.02.2018

EFECTIS

EFECTIS ERA AVRASYA TEST VE BELGELENDIRME A.S.
Dilovasi OSB 5. Kisim Firat Caddesi № 18
41455 დილოვასი კოჩაელი
www.efectis.com

შემოწმების სერთიფიკატი

ეფექტის ერა ავრასიას შემოწმების ლაბორატორიებში 2018 წლის 23 თებერვალს EN 13501-1-2007+A 1:2009 სტანდარტის შესაბამისად ცეცხლთან დაკავშირებული რეაქციის ტესტი ჩატარდა ქვემოთ აღწერილ პროდუქციაზე:

"Cold Room Wall Panel 100 mm"
"100 მმ-იანი ოთახის კედლის ცივი პანელი"

ცეცხლის დამოკიდებულება		კვამლი			წვა	
B	-	s	1	,	d	0

მდებარე შემდეგ მისამართზე:

DAVUT PANEL SAC SAN. TIC. A.S.
HACI SABANCI ORGANIZE SANAYI BOLGESI BAKLALI YOLU SARICAM/ADANA
თურქეთი

და წარმოებულია ქარხანაში

DAVUT PANEL SAC SAN. TIC. A.S.
HACI SABANCI ORGANIZE SANAYI BOLGESI BAKLALI YOLU SARICAM/ADANA
თურქეთი

შემოწმების ეს სერთიფიკატი არის ტესტის პასუხის დეკლარაცია და ის არ წარმოადგენს რაიმე ტიპის დამტკიცებას ან პროდუქტის სერთიფიკატს. პროდუქტის სპეციფიკაციასთან დაკავშირებული ყველა მონაცემი და გამოყენების სფერო აღწერილია კლასიფიკაციის ჩანაწერში # ERA-18-009

ეს სერთიფიკატი ძალაშია 2019 წლის 28 თებერვლამდე, იმის გათვალისწინებით, რომ მნიშვნელოვანი ცვლილებები არ ხდება ნიმუშის ტექნიკურ სპეციფიკაში და მასთან დაკავშირებული ტესტირებისა და კლასიფიკაციის სტანდარტების შესაბამისად.

ლაბორატორიის მენეჯერი
ალი ბაირაკტარ - ხელმოწერილია, ბეჭედი დასმულია
თარიღი: 28.02.2018

თარგმანი შეესაბამება ორიგინალს
თარჯიმანი: / მარიამ ვარდიაშვილი/

ორიათას თვრამეტი წლის ოცდაათ მაისს, მე, ნოტარიუსი ირმა გოგიას, სანოტარო ბიუროში, რომელიც მდებარეობს მისამართზე: ქ. თბილისი, ვარკეთილი, მე-3 მასივი, კალოუბნის ქ. №14, მომმართა თარჯიმანმა **მარიამ ვარდიაშვილმა.** მან წარმოადგინა დოკუმენტის თარგმანი **ინგლისური ენიდან ქართულ ენაზე (სერთიფიკატი)** და მოითხოვა თარგმანზე თავისი ხელმოწერის ნამდვილობის სანოტარო წესით დამოწმება. მე დავადგინე მისი პირადობა მის მიერ წარმოდგენილი პირადობის დამადასტურებელი დოკუმენტით და დავრწმუნდი, რომ, მე ნამდვილად **მარიამ ვარდიაშვილმა,** დაბ. 31.10.1983. პირ. №01012022680, გაც. სამოქალაქო რეესტრის სააგენტოს ისანი-სამგორის სამსახურის მიერ 07.06.2010წ. მცხ. ქ. თბილისი, ვაზისუბნის მე-3 მ/რ, IIკვ, კორპ. 3, ბ. 1, მომმართა. მე შევამოწმე **მარიამ ვარდიაშვილის** უფლებამოსილება (დიპლომი STU №006333, გაცემული 2006 წელს, თბილისის საქართველოს ტექნიკური უნივერსიტეტი მიერ) და ვადასტურებ, რომ იგი ნამდვილად უფლებამოსილია თარგმნოს. თარჯიმანი გაფრთხილებულია ნოტარიუსის მიერ, რომ პასუხს აგებს თარგმანის სისწორეზე. მან ჩემი თანდასწრებით პირადად მოაწერა ხელი დოკუმენტის თარგმანს.
მე, ნოტარიუსმა, თარჯიმანს განვუმარტე არასწორი თარგმანის სამართლებრივი შედეგები და გავაფრთხილე თარჯიმნობის გამომრიცხავი გარემოებების შესახებ. თარჯიმანმა დაადასტურა, რომ არ არსებობს თარჯიმნობის გამომრიცხავი გარემოებები და მან ჩემი თანდასწრებით პირადად მოაწერა ხელი დოკუმენტის თარგმანს.
მე, ნოტარიუსი, ვამოწმებ მხოლოდ თარჯიმნის ხელმოწერის ნამდვილობას და პასუხს არ ვაგებ დოკუმენტის შინაარსზე და სამართლებრივ შედეგზე.

გადახდილია სანოტარო მომსახურების საზღაური **2.00 ლარი,** თანახმად საქართველოს მთავრობის 2011 წლის 29 დეკემბრის №507 დადგენილების "სანოტარო მოქმედებათა შესრულებისათვის საზღაურის და საქართველოს ნოტარიუსთა პალატისათვის დადგენილი საფასურის ოდენობების, მათი გადახდევინების წესის და მომსახურების ვადების დამტკიცების შესახებ" 31-ე მუხლის, აგრეთვე **2 ლარი,** თანახმად ზემოაღნიშნული დადგენილების (№507, 29 დეკემბერი 2011 წ.) 39-ე მუხლის I პუნქტისა, **0.36 დღგ.** სულ გადახდილია **4,36 ლარი.**

On this thirtieth day of May, two thousand and eighteen year, I, Notary **Irma Gogia,** at my notary bureau located at the address: N14, Kaloubani Street, the 3rd massive of Varketili, Tbilisi, applied the translator Mariam Vardiashvili. She submitted translation of the document from **English into Georgian** (Certificate) and asked to certify her signature on translation by the notary rule. I established her identity with identity documents presented by her and was convinced that I was really applied by **Mariam Vardiashvili,** born on 31.10.1983. ID. Card № A3176428, P.N №01012022680 issued by the Isani-Samgori Service of the Civil Registry Agency on 07.06..2010 and registered at the address: Tbilisi, Vazisubani, 3 m/d, block II, Build. 3, apt. 1). I checked authority of **Mariam Vardiashvili** (Diploma STU No. 006333, issued by Georgian Technical University in 2006) and certify that she is really entitled for translation. Translator was warned by notary that she is responsible for the correctness of translation. She personally signed on document's translation in my presence.
I, notary Irma Gogia, explained to the translator legal results in the case of non-accurate translation and warned about excluding circumstances of the translator. The translator confirmed that there is no exclusion of circumstance to the translator and she signed this document in my presenc e.
I, notary Irma Gogia, certify just authenticity of the translator's signature and am not responsible for the content of this document and its legal consequences.

Paid notary tariff **2.00 GEL/Laris** according to the articles 31 of Georgian Government Resolution #507 dated December 29, 2011 about "Notary Actions fulfillment payment and according to Georgia Notary Palate payment about their payment rule and service terms establishment", also **2.00 (two) GEL/Lari** according above mentioned resolution (#507, dated December 29, 2011) article 39 p.1. + **0.36** GEL (VAT), total: **4,36 GEL.**

ნოტარიუსი: /ირმა გოგია/

Notary: **/IRMA GOGIA/**



სანოტარო მოქმედების რეგისტრაციის ნომერი	N180617401
სანოტარო მოქმედების რეგისტრაციის თარიღი	30.05.2018 წ
სანოტარო მოქმედების დასახელება	დოკუმენტის თარგმანზე დიპლომირებული მთარგმნელის ხელმოწერის დამოწმება
ნოტარიუსი	ირმა გოგია
სანოტარო ბიუროს მისამართი	ქალაქი თბილისი, ვარკეთილი, მე-3 მასივი, კალოუბნის ქუჩა N14.
სანოტარო ბიუროს ტელეფონი	599 932 798 2 76 37 45
სანოტარო მოქმედების ინდივიდუალური ნომერი	45584518342318

სანოტარო მოქმედებისა და სანოტარო აქტის შესახებ ინფორმაციის (მისი შექმნის, შეცვლის და/ან გაუქმების შესახებ) მიღება–გადამოწმება შეგიძლიათ საქართველოს ნოტარიუსთა პალატის ვებ–გვერდზე: www.notary.ge ასევე შეგიძლიათ დარეკოთ ტელეფონზე: +995(32) 2 66 19 18

DAVUT PANEL VE SAC SAN. TİC. A.Ş
Hacı Sabancı Organize Sanayi Bölgesi
Baklalı Yolu No:22 Sarıçam/ ADANA
+90 322 550 50 01
+90 322 550 50 02
info@davutpanel.com.tr
Yüreğir Vergi D. : 271 075 7596 Tic.Sic.No:66378
Mersis No:0271075759600011

DAVUT panel

02.05.2018

TO THE KIND ATTENTION OF DEAR ATTORNEY,

We state here that; all types of our sandwich panel productions resist fire at least one hour

REGARDS

DAVUT PANEL VE SAC SAN. TİC. A.Ş.
Tel: (0322) 550 50 01 Pbx Fax: (0322) 550 50 02
Hacı Sabancı Org.San Böl. Baklalı Yolu No:22 ADANA
Yüreğir V.D. 271 075 7596

DAVUT
METAL VE MADEN [illegible]
Adana H.Sabancı Org. San.Bolg.Baklalı Yolu
No:22 Giriş Kat No:2 Sarıçam ADANA
Tel:(0322) 550 50 01 Fax:(0322) 550 50 02
Yüreğir V.D. 271 077 5483



DAVUT
Panel

DAVUT PANEL VE SAC SAN. TIC. A.S.

თარიღი: 02.05.2018

ძვირფას ადვოკატს,

ჩვენ ვაცხადებთ, რომ ჩვენი სენდვიჩ პანელის პროდუქციის ყველა ტიპი ცეცხლს გამძლეა მინიმუმ ერთ საათით.

პატივისცემით,

DAVUT PANEL VE SAC SAN. TIC. A.S. - *ხელმოწერილია*
TEL.: 0322 550 50 01

DAVUT METAL VE MADEN ADES DIS TIC. A.S. - *ხელმოწერილია*
TEL.: 0322 550 50 01

თარგმანი შეესაბამება ორიგინალს
თარჯიმანი: / მარიამ ვარდიაშვილი/

ორიათას თვრამეტი წლის ოცდაათ მაისს, მე, ნოტარიუსი ირმა გოგიას, სანოტარო ბიუროში, რომელიც მდებარეობს მისამართზე: ქ. თბილისი, ვარკეთილი, მე-3 მასივი, კალოუბნის ქ. №14, მომმართა თარჯიმანმა **მარიამ ვარდიაშვილმა.** მან წარმოადგინა დოკუმენტის თარგმანი **ინგლისური ენიდან ქართულ ენაზე (წერილი)** და მოითხოვა თარგმანზე თავისი ხელმოწერის ნამდვილობის სანოტარო წესით დამოწმება. მე დავადგინე მისი პირადობა მის მიერ წარმოდგენილი პირადობის დამადასტურებელი დოკუმენტით და დავრწმუნდი, რომ, მე ნამდვილად **მარიამ ვარდიაშვილმა,** დაბ. 31.10.1983. პირ. №01012022680, გაც. სამოქალაქო რეესტრის სააგენტოს ისანი-სამგორის სამსახურის მიერ 07.06.2010წ. მცხ. ქ. თბილისი, ვაზისუბნის მე-3 მ/რ, IIკვ, კორპ. 3, ბ. 1, მომმართა. მე შევამოწმე **მარიამ ვარდიაშვილის** უფლებამოსილება (დიპლომი STU №006333, გაცემული 2006 წელს, თბილისის საქართველოს ტექნიკური უნივერსიტეტი მიერ) და ვადასტურებ, რომ იგი ნამდვილად უფლებამოსილია თარგმნოს. თარჯიმანი გაფრთხილებულია ნოტარიუსის მიერ, რომ პასუხს აგებს თარგმანის სისწორეზე. მან ჩემი თანდასწრებით პირადად მოაწერა ხელი დოკუმენტის თარგმანს.
მე, ნოტარიუსმა, თარჯიმანს განვუმარტე არასწორი თარგმანის სამართლებრივი შედეგები და გავაფრთხილე თარჯიმნობის გამომრიცხავი გარემოებების შესახებ. თარჯიმანმა დაადასტურა, რომ არ არსებობს თარჯიმნობის გამომრიცხავი გარემოებები და მან ჩემი თანდასწრებით პირადად მოაწერა ხელი დოკუმენტის თარგმანს.
მე, ნოტარიუსი, ვამოწმებ მხოლოდ თარჯიმნის ხელმოწერის ნამდვილობას და პასუხს არ ვაგებ დოკუმენტის შინაარსზე და სამართლებრივ შედეგზე.

გადახდილია სანოტარო მომსახურების საზღაური **2.00 ლარი,** თანახმად საქართველოს მთავრობის 2011 წლის 29 დეკემბრის №507 დადგენილების "სანოტარო მოქმედებათა შესრულებისათვის საზღაურის და საქართველოს ნოტარიუსთა პალატისათვის დადგენილი საფასურის ოდენობების, მათი გადახდევინების წესის და მომსახურების ვადების დამტკიცების შესახებ" 31-ე მუხლის, აგრეთვე **2 ლარი,** თანახმად ზემოაღნიშნული დადგენილების (№507, 29 დეკემბერი 2011 წ.) 39-ე მუხლის I პუნქტისა, **0.36 დღგ.** სულ გადახდილია **4,36 ლარი.**

On this thirtieth day of May, two thousand and eighteen year, I, Notary **Irma Gogia,** at my notary bureau located at the address: N14, Kaloubani Street, the 3rd massive of Varketili, Tbilisi, applied the translator Mariam Vardiashvili. She submitted translation of the document from **English into Georgian** (Letter) and asked to certify her signature on translation by the notary rule. I established her identity with identity documents presented by her and was convinced that I was really applied by **Mariam Vardiashvili,** born on 31.10.1983. ID. Card № A3176428, P.N №01012022680 issued by the Isani-Samgori Service of the Civil Registry Agency on 07.06..2010 and registered at the address: Tbilisi, Vazisubani, 3 m/d, block II, Build. 3, apt. 1). I checked authority of **Mariam Vardiashvili** (Diploma STU No. 006333, issued by Georgian Technical University in 2006) and certify that she is really entitled for translation. Translator was warned by notary that she is responsible for the correctness of translation. She personally signed on document's translation in my presence.
I, notary Irma Gogia, explained to the translator legal results in the case of non-accurate translation and warned about excluding circumstances of the translator. The translator confirmed that there is no exclusion of circumstance to the translator and she signed this document in my presenc e.
I, notary Irma Gogia, certify just authenticity of the translator's signature and am not responsible for the content of this document and its legal consequences.

Paid notary tariff **2.00 GEL/Laris** according to the articles 31 of Georgian Government Resolution #507 dated December 29, 2011 about "Notary Actions fulfillment payment and according to Georgia Notary Palate payment about their payment rule and service terms establishment", also **2.00 (two) GEL/Lari** according above mentioned resolution (#507, dated December 29, 2011) article 39 p.1. + **0.36** GEL (VAT), total: **4,36 GEL.**

ნოტარიუსი: /ირმა გოგია/

Notary: **/IRMA GOGIA/**

სანოტარო მოქმედების რეგისტრაციის ნომერი	N180617379
სანოტარო მოქმედების რეგისტრაციის თარიღი	30.05.2018 წ
სანოტარო მოქმედების დასახელება	დოკუმენტის თარგმანზე დიპლომირებული მთარგმნელის ხელმოწერის დამოწმება
ნოტარიუსი	ირმა გოგია
სანოტარო ბიუროს მისამართი	ქალაქი თბილისი, ვარკეთილი, მე-3 მასივი, კალოუბნის ქუჩა N14.
სანოტარო ბიუროს ტელეფონი	599 932 798 2 76 37 45
სანოტარო მოქმედების ინდივიდუალური ნომერი	80532779057118

სანოტარო მოქმედებისა და სანოტარო აქტის შესახებ ინფორმაციის (მისი შექმნის, შეცვლის და/ან გაუქმების შესახებ) მიღება–გადამოწმება შეგიძლიათ საქართველოს ნოტარიუსთა პალატის ვებ-გვერდზე: www.notary.ge ასევე შეგიძლიათ დარეკოთ ტელეფონზე: +995(32) 2 66 19 18

DAVUT PANEL VE SAC SAN. TİC. A.Ş.
Hacı Sabancı Organize Sanayi Bölgesi
Baklalı Yolu No:22 Sarıçam/ ADANA
+90 322 550 50 01
+90 322 550 50 02
info@davutpanel.com.tr
Yüreğir Vergi D. : 271 075 7596 **Tic.Sic.No:**66378
Mersis No:0271075759600011

DAVUT panel

02.05.2018

TO THE KIND ATTENTION OF DEAR ATTORNEY,

We state here that; all types of our sandwich panel productions resist fire at least one hour

REGARDS

DAVUT
PANEL VE SAC SAN. TİC. A.Ş.
Tel: (0322) 550 50 01 Pbx Fax: (0322) 550 50 02
Hacı Sabancı Org.San.Böl. Baklalı Yolu No:22 ADANA
Yüreğir V.D. 271 075 7596

DAVUT
METAL VE MADEN [illegible]
Adana H.Sabancı Org.San.Bolg.Baklalı Yolu
No:22 Giriş Kat No:2 Sarıçam ADANA
Tel:(0322) 550 50 01 Fax:(0322) 550 50 02
Yüreğir V.D. 271 077 5483



EFECTIS ERA AVRASYA TEST VE BELGELENDİRME A.Ş.
Dilovası OSB 5. Kısım Fırat Caddesi No:18
41455 Dilovası KOCAELİ
www.efectis.com

TEST CERTIFICATE

The related reaction to fire test was carried out at Efectis Era Avrasya Test Laboratories on 23th February 2018 in accordance with EN 13501-1:2007+A1:2009 standard for the product as described below::

" COLD ROOM WALL PANEL 100 mm "

Fire behaviour		Smoke production			Flaming droplets	
B	-	s	1	,	d	0

Placed on the market by

DAVUT PANEL SAC SAN. TİC. A.Ş.
HACI SABANCI ORGANİZE SANAYİ BÖLGESİ BAKLALI YOLU SARIÇAM/ADANA/TURKEY

And Produced In the Factory

DAVUT PANEL SAC SAN. TİC. A.Ş.
HACI SABANCI ORGANİZE SANAYİ BÖLGESİ BAKLALI YOLU SARIÇAM/ADANA/TURKEY

This test certificate is a declaration of the test results and does not represent any type approval or certification of the product. All details related to product specifications and field of application are described in the classification report Nr. ERA-18-009

This certificate is initially valid until 28th February 2019 providing that no significant modifications are made in technical specification of the specimen and related test and classification standards.

Ali BAYRAKTAR
Laboratory Manager
28.02.2018

TÜRKAK - TÜRK AKREDİTASYON KURUMU tarafından akredite
Accredited by TÜRKAK

TSE DENEY ve KALİBRASYON MERKEZİ BAŞKANLIĞI

Elektroteknik ve Kimya Laboratuvarları Grup Başkanlığı

Ege Bölge Laboratuvarları Müdürlüğü

Adres:8780/1 sokak No:5 Çiğli/ İZMİR
Tel:+90 (232) 376 24 25 Fax: +90 (232) 386 15 10 E-posta:egebolgelab@tse.org.tr Web:www.tse.org.tr

HEADSHIP OF TSE TEST and CALIBRATION CENTER
AEGEAN REGIONAL LABORATORIES (İZMIR)

Address:8780/1 sokak No:5 Çiğli/ İZMİR
Tel:+90 (232) 376 24 25 Fax: +90 (232) 386 15 10 E-mail:egebolgelab@tse.org.tr Web:www.tse.org.tr

Test
TS EN ISO/IEC 17025
AB-0001-T

AB-0001-T
259929
06-15

MUAYENE VE DENEY RAPORU
TEST REPORT

Deneyi Talep Eden (Adı,Adresi,Şehir vb.) *Customer (Name,Adress,City etc.)*	:	DAVUT PANEL VE SAC SAN. TİC. A.Ş ORGANİZE SANAYİ BÖLGESİ BAKLALI YOLU ÜZERİ NO: 22 SARIÇAM / ADANA - -ADANA)
Deney Talep Tarihi/No *Order Date / No*	:	03.03.2015 / 124915
Numunenin Tanımı (Cins, Marka, Tip, Tür, Model vb.) *Sample Description(Type,Mark,Model etc.)*	:	CEPHE PANELİ, , Pır Dolgu Panel, Yoğunluk : 42 Kg/m³ , - , - , 1.00 paket
Numune Kabul Tarihi *Test Item Receipt Date*	:	03.03.2015
Deneylerin Yapıldığı Tarih *Date of Test*	:	03.03.2015 - 17.06.2015
Uygulanan Standard / Metod *Applied Standard/Method*	:	TS EN 13823:2010 :2011-01 Yapı Ürünleri İçin Yangına Tepki Deneyleri-Tek Bir Yakma Unsuru İle Isıl Etkiye Maruz Kalan-Döşemeler Haricindeki Yapı Ürünleri
Raporun Sayfa Sayısı *Number of pages of the report*	:	7
Açıklamalar *Remarks*	:	

Türk Akreditasyon Kurumu(TÜRKAK) deney raporlarının tanınması konusunda Avrupa Akreditasyon Birliği(EA) ve Uluslararası Laboratuvar Akreditasyon Birliği(ILAC) ile karşılıklı tanınma antlaşmasını imzalamıştır.
The Turkish Accreditation Acency(TURKAK) is signatory to the multilateral agreements of the European co-operation for the Accreditation(EA) and of the International Laboratory Accreditation(ILAC) for the Mutual recognation of test reports.
Deney ve/veya ölçüm sonuçları, genişletilmiş ölçüm belirsizlikleri (olması halinde) ve deney metodları bu raporun tamamlayıcı kısmı olan takip eden sayfalarda verilmiştir.
The test and/or measurement results, the uncertainties (if applicable) with confidence probability and test methods are given on the following pages which are part of this report.
Bu rapor özel deney talebine istinaden düzenlenmiş olup, Standartlara Uygunluk Belgesi niteliğinde değildir. Partiyi temsil etmez, ayrıca ilan, reklam ve ihalelerde uygunluk belgesi niteliğinde kullanılamaz.
This test report was prepared upon customer's request, can not be used as certificate of conformity to standards, does not represent a batch and can not be used as conformity document for advertisements and procurements .

Mühür *Seal*	**Tarih** *Date*	**Deney Sorumlusu** *Person in charge of tests*	**Kontrol Eden** *Reviewer*	**Onaylayan** *Approved by*
	18/6/15	Ahmet ASKER Teknisyen	Tacettin AKGÜN Teknik Şef (Vekaleten)	Şahap Gürler PAŞA Laboratuvar Müdürü

Bu rapor, hazırlayan laboratuvarın yazılı izni olmadan kısmen kopyalanıp çoğaltılamaz. İmzasız ve mühürsüz raporlar geçersizdir.
Bu rapor, sadece deneyi yapılan numune için geçerlidir ve "Ürün Belgesi" yerine geçmez.
This test report shall not be reproduced other than in full except with the written permission of the laboratory. Test reports without signature and seal are not valid.
This test report represents only tested sample(s), and shall not be used as Product Certificate

TS EN 13823:2010
YAPI ÜRÜNLERİ İÇİN YANGINA TEPKİ DENEYLERİ
TEK BİR YAKMA UNSURU İLE ISIL ETKİYE MARUZ KALAN
DÖŞEMELER HARİCİNDEKİ YAPI ÜRÜNLERİ

Deney ve Kalibrasyon Laboratuvarları Merkezi Başkanlığı Ex Laboratuvarı	**Adresi / Adresleri :** Tariş Pamuk Depoları Arkası Çiğli/İzmir

Muayene ve Deney Sonucunda Verilecek Hükümler :

İlgili Kural/Deney Numuneye Uygulanması Gerekmiyorsa (Numuneye Uygulanmaz)	: NU
Test Edilen Numune Kurallara Uyuyorsa (Geçti)	: G
Test Edilen Numune Kurallara Uymuyorsa (Kaldı)	: K
Herhangi Bir Nedenle Uygulanmayan Kural/Deney var ise (Yapılamadı)	: Y

Genel değerlendirmeler :

- Bu Rapor üç nüsha halinde düzenlenmiştir.
- Bu rapor TSE' nin izni olmadan kısmen çoğaltılamaz.
- Bu rapor yalnızca deneyi yapılan numune/numuneler için geçerlidir.
- "Açıklamaya bakınız" ifadesiyle, raporun ekinde sunulan açıklamaya atıf yapılmaktadır.
- "Ek tabloya bakınız" ifadesiyle, raporun ekinde sunulan tabloya atıf yapılmaktadır.
- Bu raporda ondalık sayılar nokta ile ayrılmıştır.
- Raporun her sayfası deneyi yapan/yapanlarca paraflanmış ve ilgili mavi birim mühürü bulunmaktadır. İmzasız ve mühürsüz raporlar geçersizdir.

Firma Beyanları: DAVUT PANEL VE SAC SAN. TİC.A.Ş.

Kendini Taşıyan Çift Yüzeyli Metal Kaplama Yalıtım Paneli – (Fabrikada İmal Edilen)

"DAVUT PANEL" MARKALI PIR DOLGULU CEPHE PANELİ

- 50 mm PIR dolgulu, bir yüzeyi (iç) 0,50 mm boyalı saç, bir yüzeyi (dış) 0,60mm boyalı saç kaplı
- PIR birim hacim ağırlığı 42 kg/m^3
- Birleşim yeri; TİP III

Bu rapor, hazırlayan laboratuvarın yazılı izni olmadan kısmen veya tamamen çoğaltılamaz. İmzasız ve mühürsüz raporlar geçersizdir. Bu rapor, sadece deneyi yapılan numune için geçerlidir ve "Ürün Belgesi" yerine geçmez.
This report shall not be reproduced other than in full except with the permission of the laboratory. Test reports without signature and seal are not valid.

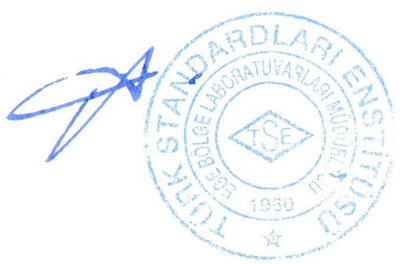

1. TEST METODUNUN TANIMI

Deneyler; TS EN 13823:Ocak 2011 - Yapı ürünleri için yangına tepki deneyi "Tek Bir Yakma Unsuru İle Isıl Etkiye Maruz Kalan Döşemeler Haricindeki Yapı Ürünleri" standardına uygun olarak yapılmıştır.

2. NUMUNENİN TANIMI

Numunenin Geliş Tarihi: 03.03.2015

Numunenin Tanımlanması: **PIR DOLGULU CEPHE PANELİ**

Numuneyi Üreten Firmanın Adı: **DAVUT PANEL VE SAC SAN. TİC.A.Ş.**

Numunenin Üretim Tarihi: --

Deney Talep Eden Firmanın Adı: **DAVUT PANEL VE SAC SAN. TİC.A.Ş.**

Numunenin Markası : **"DAVUT PANEL" MARKA**

Firma Beyanları :

Numunenin:	**Nominal Değerler (*)**	**Ölçülen Değerler (**)**
Kalınlığı (mm)	50mm PIR	0,50mm saç + 50mmPIR +0,60mm saç Boya 30µ
Birim Alan Kütlesi (g/m²)		
Yoğunluğu (kg/m³)	-	42 kg/m³ PIR

(*) Firma tarafından beyan edilen değerler

(**) Laboratuvar tarafından doğrulanan değerler

Şartlandırma başlangıcı : 03.03.2015

Şartlandırma bitişi : 30.05.2015 (TS EN 13238 Madde 4.3. C.)



4. SONUÇLAR VE GÖZLEMLER

Deney tarihi : 30.05.2015

Ortam basıncı : 103000 Pa

Ortamın bağıl nemi :50 %

Ortam Sıcaklığı : 23 °C

a) Ölçülen Değerler

Deney Numunesinin No.	M1	M2	M3
FIGRA değeri 0,2 (W/s)	55,1	72,2	73,2
THR600s (MJ)	3,0	2,6	3,6
SMOGRA değeri (m^2/s^2)	11,2	13,6	18,8
TSP600s (m^2)	109,8	84,9	145,1

b) Gözlemler

Deney Numunesinin Numaraları:	M1	M2	M3
Yanal alevin uzun kolda yayılması	Olmadı	Olmadı	Olmadı
Ateşli parçalar veya damlacıklar f<10s f>10s	Olmadı	Olmadı	Olmadı
Yüzeyin alevlenme durumu	Oldu	Oldu	Oldu
Numuneden çıkan dumanın taşıma arabasından dışarı deney odasının içine akması	Olmadı	Olmadı	Olmadı
Numuneden parçalar düşmesi	Olmadı	Olmadı	Olmadı
Köşede aralık oluşması (destek levhalarının birbirine tespit edilememesinden)	Olmadı	Olmadı	Olmadı
Deneyin erken sonlandırılması	Olmadı	Olmadı	Olmadı
Numunenin bozulması veya çökme oluşması	Olmadı	Olmadı	Olmadı

C) Test sonuçlarının özeti:

Bu deney sonucu, deneyin uygulandığı özel şartlar altında bir mamulün deney numunesinin davranışıyla ilgili olup kullanılmakta olan bir mamulün potansiyel yangın tehlikesinin değerlendirilmesi için tek kriter olması öngörülmemiştir. Bu test sonuçları deneyi yapılan numune için geçerlidir.

Ortalama FIGRA değeri 0,2 (W/s)	66,8
Ortalama THR600s (MJ)	3,1
Ortalama SMOGRA değeri (m^2/s^2)	14,5
Ortalama TSP600s (m^2)	113,3
LFS<kenara kadar (mm)	Olmadı
Yanan damlacıklar/parçacıklar ≤ 10 s	Olmadı
Yanan damlacıklar/parçacıklar > 10 s	Olmadı

Test Numunesinin Fotoğrafları-

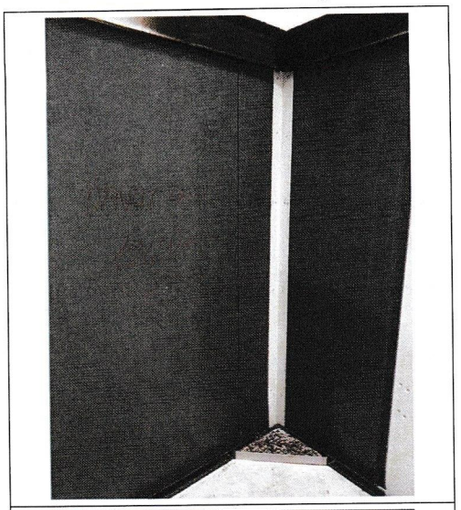

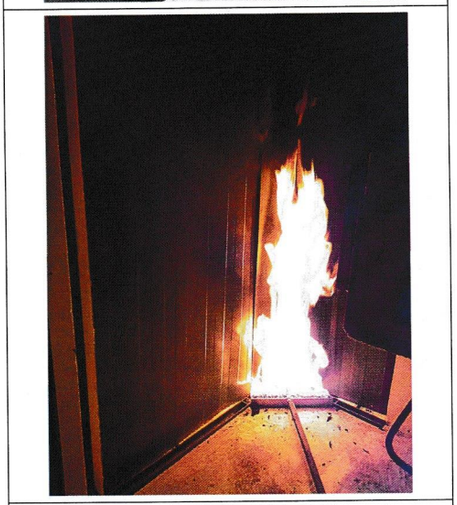

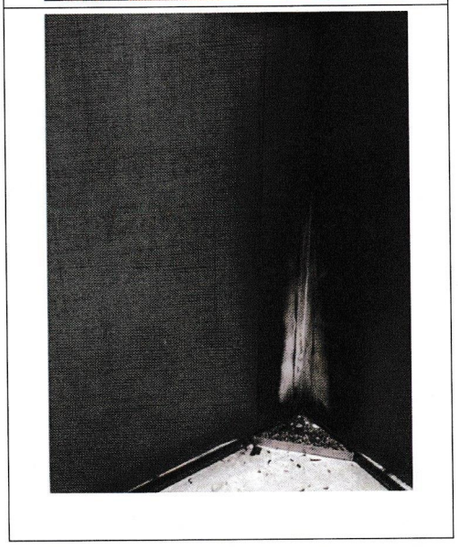

***Montaj Özellikleri;**

- Yüzeyin profil geometrisi : İç ve dış yüzeyi düz (5mm den küçük hatveli,),
Deneyler Panelin İç Yüzeyine Alev Uygulanarak Yapıldı.

- 1500x500mm kısa kol ve 1500x1000mm uzun kol.

(EN 14509 : Ek C Madde C.1.1.3. (şekil C.1 standard montaj için montaj ve köşe detayları)

- Köşe yaka; dış 50x100x1,5mm, İç 50x50x1,5mm .

(EN 14509 : Ek C Madde **C.1.1.3.1.2** Köse yakaları ve keçeler)

- Uzun kanat birleşim yeri TİP III ile sabitlenen. (zeminden ve üstten 40mm mesafede vida ile sabitleme)
(EN 14509:EkC Madde C.1.1.3.2 Panelin başka panele birleştirildiği birleşim yerlerinin emniyete alınması)
- Panelin başka panelle birleşim yerinde ve köşe birleşim yerinde derz dolgu malzemesi kullanıldı. (Numunelerle birlikte DAVUT PANEL tarafından temin edilen)

- Destek levhaları ile kısa ve uzun kanat paneller arasında 35mm hava aralığı bırakılmıştır.

(EN 14509 : Ek C Madde C.1.1.3.1.3. Arkalık ve hava boşluğu)

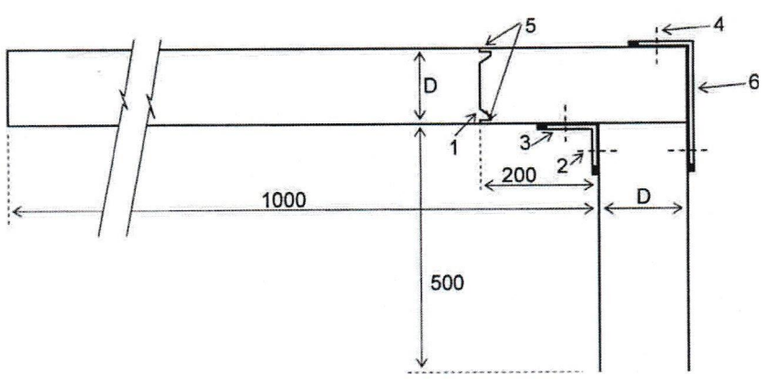

Açıklama:
D panel kalınlığı
1 fabrika uygulamalı kapama ile panel bağlantısı
2 her 400 mm'de vida
3 iç köşe
4 her 400 mm'de vida
5 kilit sistemi
6 dış köşe
Şekil C.1 – Standart Montaj için Montaj ve köşe detayları,

SONUÇ

Bu deney sonucu deneyin uygulandığı özel şartlar altında bir mamulün deney numunesinin davranışı ile ilgilidir; Gerçek kullanım şartlarındaki bir mamulün potansiyel yangın tehlikesinin değerlendirilmesi için yegâne bir kriterle ilgili değildir.

DAVUT PANEL VE SAC SAN. TİC.A.Ş. firmasının üretmiş olduğu "**DAVUT PANEL**" Marka **Kendini Taşıyan Çift Yüzeyli Metal Kaplama Yalıtım Paneli (bir yüzeyi (iç) 0,5 mm boyalı saç, bir yüzeyi (dış) 0,6mm boyalı saç kaplı, 50 mm kalınlığında, 42 kg/m³ PIR dolgulu, Birleşim yeri tip III, Cephe Yalıtım Paneli)** numunesi/numuneleri üzerinde TS EN 13823:Ocak 2011 Standardına göre muayene ve deneyler yapılmıştır.

İş bu rapor ve TS EN 11925-2 konulu 06.2015/25991 nolu muayene ve deney raporunda verilen sonuçlar;

TS EN 13501-1/Nisan 2013 Çizelge-1 **B S2 d0** sınıfı kriterlerine **UYGUNDUR***

**Montaj Özellikleri; bölümünde belirtilen son kullanım uygulamaları için geçerlidir.*

TÜRK STANDARDLARI ENSTİTÜSÜ BELGELENDİRME LABORATUVARLARI MÜDÜRLÜĞÜ 1950

TÜRK STANDARDLARI ENSTİTÜSÜ

TURKISH STANDARDS INSTITUTION TSE INSTITUT TURC DE NORMALISATION

Sayı : 45750168-190.01.00.00-248895
Konu : Muayene ve Deney Hizmetleri

18.06.2015

DAVUT PANEL VE SAC SAN TİC A Ş

İlgi yazınızla laboratuvarımıza gönderilen numuneler üzerinde talep ettiğiniz deneyler yapılmıştır.

Numune Cinsi	Marka/Model/Tip/Tür/Sınıf	Rapor Tarihi	Rapor No	Standart	Sonuç
CEPHE PANELİ	/Pır Dolgu Panel, Yoğunluk : 42 Kg/m³/-/-	17.6.2015	259929	TS EN 13823:2010	-
CEPHE PANELİ	/Pır Dolgu Panel, Yoğunluk : 42 Kg/m³/-/-	17.6.2015	259931	TS EN ISO 11925-2:2010	-

Yukarıda Rapor Tarih/ Numaraları (RT/N) ile belirtilen numunelere ait Muayene ve Deney raporları ile Fatura yazımız ekinde gönderilmektedir.

Bilgilerinize sunarım.

Not:Muayene ve deney amacı ile alınan numuneler,firma veya yetkilisi tarafından 3 ay içerisinde alınmadığı takdirde tasfiye edilecektir.

e-imzalı
Şahap Gürler PAŞA
Ege Bölge Laboratuvarları Müdürü

Bu evrak 5070 sayılı Elektronik İmza Kanunu'na göre elektronik olarak imzalanmıştır. Doğrulama adresi: https://evrakkontrol.tse.org.tr/Dogrulama.aspx?p=fob9d3ıs

Adres : 8780/1 sokak No:5 Çiğli / İZMİR
Telefon : 2323762425
E-posta : aasker@tse.org.tr
Ref. No: 3494739
Ayrıntılı Bilgi : A. ASKER
Fax : 90 (232) 386 15 10
Elektronik Ağ: : www.tse.org.tr

TÜRKAK - TÜRK AKREDİTASYON KURUMU tarafından akredite
Accredited by TÜRKAK

TSE DENEY ve KALİBRASYON MERKEZİ BAŞKANLIĞI

Elektroteknik ve Kimya Laboratuvarları Grup Başkanlığı

Ege Bölge Laboratuvarları Müdürlüğü

Adres:8780/1 sokak No:5 Çiğli/ İZMİR
Tel:+90 (232) 376 24 25 Fax: +90 (232) 386 15 10 E-posta:egebolgelab@tse.org.tr Web:www.tse.org.tr

HEADSHIP OF TSE TEST and CALIBRATION CENTER
AEGEAN REGIONAL LABORATORIES (İZMIR)

Address:8780/1 sokak No:5 Çiğli/ İZMİR
Tel:+90 (232) 376 24 25 Fax: +90 (232) 386 15 10 E-mail:egebolgelab@tse.org.tr Web:www.tse.org.tr

Test
TS EN ISO/IEC 17025
AB-0001-T

AB-0001-T
259931
06-15

MUAYENE VE DENEY RAPORU
TEST REPORT

Deneyi Talep Eden (Adı,Adresi,Şehir vb.) *Customer (Name,Adress,City etc.)*	:	DAVUT PANEL VE SAC SAN. TİC. A.Ş ORGANİZE SANAYİ BÖLGESİ BAKLALI YOLU ÜZERİ NO: 22 SARIÇAM / ADANA - -ADANA)
Deney Talep Tarihi/No *Order Date / No*	:	03.03.2015 / 124915
Numunenin Tanımı (Cins, Marka, Tip, Tür, Model vb.) *Sample Description(Type,Mark,Model etc.)*	:	CEPHE PANELİ, , Pır Dolgu Panel, Yoğunluk : 42 Kg/m³ , - , - , 1.00 paket
Numune Kabul Tarihi *Test Item Receipt Date*	:	03.03.2015
Deneylerin Yapıldığı Tarih *Date of Test*	:	03.03.2015 - 17.06.2015
Uygulanan Standard / Metod *Applied Standard/Method*	:	TS EN ISO 11925-2:2010 :2011-04 Yangın dayanımı deneyleri – Aleve doğrudan maruz kaldığında tutuşabilirlik – Bölüm 2: Tek alev kaynağıyla deney +TS EN ISO 11925-2:2010/AC:2011 :2011-04
Raporun Sayfa Sayısı *Number of pages of the report*	:	2
Açıklamalar *Remarks*	:	

Türk Akreditasyon Kurumu(TÜRKAK) deney raporlarının tanınması konusunda Avrupa Akreditasyon Birliği(EA) ve Uluslararası Laboratuvar Akreditasyon Birliği(ILAC) ile karşılıklı tanınma antlaşmasını imzalamıştır.
The Turkish Accreditation Acency(TURKAK) is signatory to the multilateral agreements of the European co-operation for the Accreditation(EA) and of the International Laboratory Accreditation(ILAC) for the Mutual recognation of test reports.
Deney ve/veya ölçüm sonuçları, genişletilmiş ölçüm belirsizlikleri (olması halinde) ve deney metodları bu raporun tamamlayıcı kısmı olan takip eden sayfalarda verilmiştir.
The test and/or measurement results, the uncertainties (if applicable) with confidence probability and test methods are given on the following pages which are part of this report.
Bu rapor özel deney talebine istinaden düzenlenmiş olup, Standartlara Uygunluk Belgesi niteliğinde değildir. Partiyi temsil etmez, ayrıca ilan, reklam ve ihalelerde uygunluk belgesi niteliğinde kullanılamaz.
This test report was prepared upon customer's request, can not be used as certificate of conformity to standards, does not represent a batch and can not be used as conformity document for advertisements and procurements .

Mühür *Seal*	**Tarih** *Date*	**Deney Sorumlusu** *Person in charge of tests*	**Kontrol Eden** *Reviewer*	**Onaylayan** *Approved by*
	18.06.15	Ahmet ASKER Teknisyen	Tacettin AKGÜN Teknik Şef (Vekaleten)	Şahap Gürler PAŞA Laboratuvar Müdürü

Bu rapor, hazırlayan laboratuvarın yazılı izni olmadan kısmen kopyalanıp çoğaltılamaz. İmzasız ve mühürsüz raporlar geçersizdir.
Bu rapor, sadece deneyi yapılan numune için geçerlidir ve "Ürün Belgesi" yerine geçmez.
This test report shall not be reproduced other than in full except with the written permission of the laboratory. Test reports without signature and seal are not valid.
This test report represents only tested sample(s), and shall not be used as Product Certificate

TSE DENEY ve KALİBRASYON MERKEZİ BAŞKANLIĞI EX LABORATUVARI 259931/06.2015
HEADSHIP OF TSE TEST and CALIBRATION CENTRE EX LABORATORY *AB -0001-T*

MUAYENE - DENEY SONUÇLARI *TEST RESULTS*

TS EN ISO 11925-2 : 2010 / Nisan/*April* 2011

Yapı Malzemeleri – Yangın Dayanımı Deneyleri – Aleve Doğrudan Maruz Kaldığında Tutuşabilirlik – Bölüm 2: Tek Alev Kaynağıyla Deney

Reaction to fire tests - Ignitability of products subjected to direct impingement of flame - Part 2: Single-flame source test

Deney Laboratuvarı / Laboratuvarları : DKMB Ex Laboratuvarı	**Adres:** 8780 /1 Sokak No:5 Çiğli / İZMİR

Muayene ve Deney Sonucunda Verilecek Hükümler :

İlgili Kural/Deney Numuneye Uygulanması Gerekmiyorsa (Numuneye Uygulanmaz)	: **NU**
Test Edilen Numune Kurallara Uyuyorsa (**Geçti**)	: **G**
Test Edilen Numune Kurallara Uymuyorsa (**Kaldı**)	: **K**
Herhangi Bir Nedenle Uygulanmayan Kural/Deney var ise (Yapılamadı)	: **Y**

Genel değerlendirmeler :

- Bu Rapor iki nüsha halinde düzenlenmiştir.
- Bu rapor TSE' nin izni olmadan kısmen çoğaltılamaz.
- Bu rapor yalnızca deneyi yapılan numune/numuneler için geçerlidir.
- "Açıklamaya bakınız" ifadesiyle, raporun ekinde sunulan açıklamaya atıf yapılmaktadır.
- "Ek tabloya bakınız" ifadesiyle, raporun ekinde sunulan tabloya atıf yapılmaktadır.
- Bu raporda ondalık sayılar nokta ile ayrılmıştır.
- Raporun her sayfası deneyi yapan/yapanlarca paraflanmış ve ilgili mavi birim mührü bulunmaktadır. İmzasız ve mühürsüz raporlar geçersizdir.

FİRMA ADI: **DAVUT PANEL VE SAC SAN. TİC.A.Ş.**
FİRMA ADRESİ : **ADANA**
FİRMA BEYANLARI : **"DAVUT PANEL" MARKALI PUR DOLGULU CEPHE PANELİ**
(50 mm 42kg/m^3 PIR dolgulu, iç ve dış yüzeyi boyalı saç)

İlgili Ürün Standardı ve Atıfları: Yangına Tepki Deneyi (EN 13501-1 B Sınıfı)
Şartlandırma Ayrıntıları: Deney numuneleri, 23 ± 2 °C sıcaklık ve 50 ± 5% bağıl nem de EN 13238'madde 4.3 C'ye göre şartlandırılmıştır. (TS EN ISO 11925-2 Madde 6.)

Sınıf B (TS EN 13501-1 Madde 8.)	Sınıf B'ye uygunluğu tespit için bir mamûl , 30 sn maruz bırakma (deney süresi 60sn.) süresi kullanılarak TS EN ISO 11925-2'ye göre deneylere tabi tutulur.
Deney Numunesi (TS EN ISO 11925-2 Madde 5)	Uzunluk 250 mm , Genişlik 90 mm , Kalınlık 50mm
Maruz Bırakma Şartları (TS EN ISO 11925-2 Madde 7.3.3)	30sn. **Yüzeyden** aleve maruz bırakıldı TS EN 14509 Ek C.Madde 1.2. EN ISO 11925-2 Yangin deneyi (Tutusabilirlik deneyi) C.1.2.2 Yöntem **a) Yaka kullanılmamış korumasız uygulamalar için yöntem:**

Test Sonuçları (TS EN ISO 11925-2 Madde 8.)

Numune Numarası	1	2	3	4	5	6
Tutuşma (Evet/Hayır)	Evet	Evet	Evet	Evet	Evet	Evet
Alevin 150mm Yayılıp Yayılmadığı(Evet/Hayır)	Hayır	Hayır	Hayır	Hayır	Hayır	Hayır
150mm Alev Yayılma Süresi (T150) *Den.Sür. Fs≤150 mm -Geçti Den.Sür. Fs≥150 mm -Kaldı*	-	-	-	-	-	-
Süzgeç Kağıdında Yanma(Evet/Hayır)	Hayır	Hayır	Hayır	Hayır	Hayır	Hayır
KARAR	**G**	**G**	**G**	**G**	**G**	**G**
Gözlemler	Numunelerde tutuşma oldu. Alev deney süresi içerisinde 150mm ölçme çizgisine ulaşmadı. Damlama olmadı, erime ve yanma oldu, süzgeç kağıdı yanmadı.					

SONUÇ: Numuneye/Numunelere muayene ve deneyler TS EN ISO 11925-2 :2010 / Nisan 2011 sayılı Türk Standardına göre yapılmıştır.

"Bu deney sonucu deneyin uygulandığı özel şartlar altında bir mamulün deney numunesinin davranışı ile ilgilidir; Gerçek kullanım şartlarındaki bir mamulün potansiyel yangın tehlikesinin değerlendirilmesi için yegâne bir kriterle ilgili değildir."

TÜRK STANDARDLARI ENSTİTÜSÜ BÖLGE LABORATUVARLARI MÜDÜRLÜĞÜ 1950

TS EN 13501-1 ve DIN 4102 Yangın tepki sınıfları kaşılaştırma tablosu

Malzemenin Yanıcılık Özelliği	Duman Oluşumu Yok	Yanma Damlamaları /Tanecikleri Yok	TS EN 13501-1 'e göre Yangına Tepki Sınıfları	DIN 4102 'ye göre Yangına Tepki Sınıfları
Hiç Yanmaz	✓	✓	A1	A1
Zor Yanıcı	✓	✓	A2-S1,d0	A2
Zor Alevlenici	✓	✓	B-S1,d0	B1
			C-S1,d0	
		✓	A2-S2,d0	
			A2-S3,d0	
			B-S2,d0	
			B-S3,d0	
			C-S2,d0	
			C-S3,d0	
	✓		A2-S1,d1	
			A2-S1,d2	
			B-S1,d1	
			B-S1,d2	
			C-S1,d1	
			C-S1,d2	
			A2-S3,d2	
			B-S3,d2	
			C-S3,d2	
Normal Alevlenici		✓	D-S1,d0	B2
			D-S2,d0	
			D-S3,d0	
			E	
			D-S1,d1	
			D-S2,d1	
			D-S3,d1	
			D-S1,d2	
			D-S2,d2	
			D-S3,d2	
			E-d2	
Kolay Alevlenici			F	B3

SONUÇ

Bu deney sonucu deneyin uygulandığı özel şartlar altında bir mamulün deney numunesinin davranışı ile ilgilidir; Gerçek kullanım şartlarındaki bir mamulün potansiyel yangın tehlikesinin değerlendirilmesi için yegâne bir kriterle ilgili değildir.

DAVUT PANEL VE SAC SAN. TİC.A.Ş. firmasının üretmiş olduğu "**DAVUT PANEL**" Marka **Kendini Taşıyan Çift Yüzeyli Metal Kaplama Yalıtım Paneli (bir yüzeyi (iç) 0,5 mm boyalı saç, bir yüzeyi (dış) 0,6mm boyalı saç kaplı, 50 mm kalınlığında, 42 kg/m³ PIR dolgulu, Birleşim yeri tip III, Cephe Yalıtım Paneli)** numunesi/numuneleri üzerinde TS EN 13823:Ocak 2011 Standardına göre muayene ve deneyler yapılmıştır.

İş bu rapor ve TS EN 11925-2 konulu 06.2015/25991 nolu muayene ve deney raporunda verilen sonuçlar;

TS EN 13501-1/Nisan 2013 Çizelge-1 **B S2 d0** sınıfı kriterlerine **UYGUNDUR***

**Montaj Özellikleri; bölümünde belirtilen son kullanım uygulamaları için geçerlidir.*

