საკადასტრო საზღვარი

საკადასტრო საზღვარი

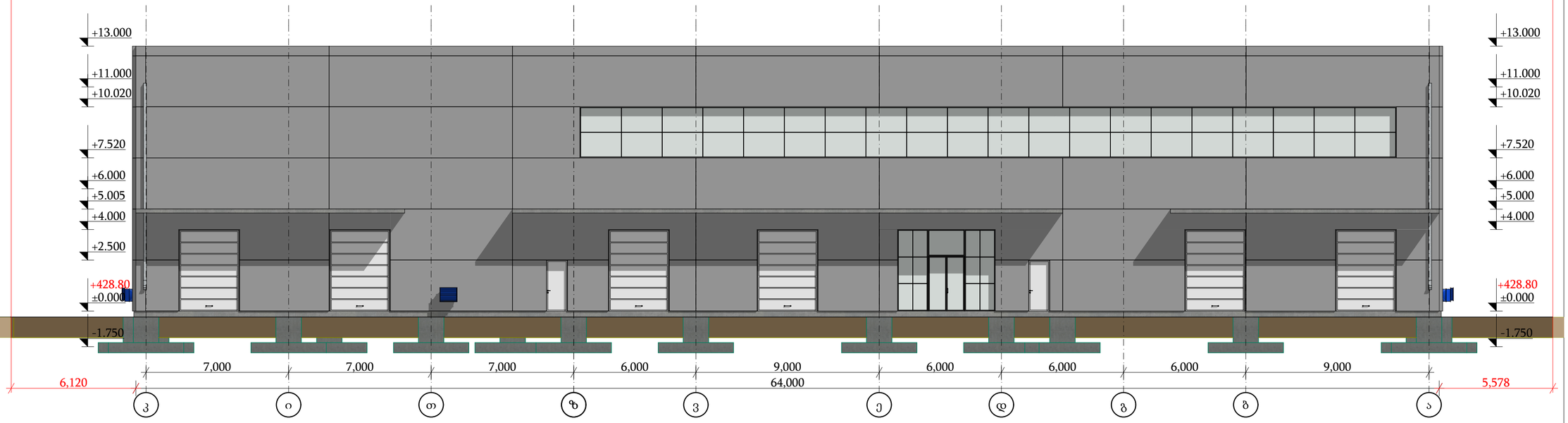

ექსპერტი კონსტრუქციები

არქიტექტურული ნაწილი

ELEMENT CONSTRUCTION 205208746 შპს "ელემენტ კონსტრუქციები"

თარიღი:

მისამართი: ქ.თბილისი, დ.გურამიშვილის გამზირი №84

ფუნქციური დანიშნულება: საწყობი

საპროექტო ფასადი ჯ-ა ტერძეზმი

მთავარი არქიტექტორი: ბექარი კინწურაშვილი

შესრულა :

დირექტორი: ლევან ბერაძე

ზომა A-2

მასშტაბი:

ნახაზის ტიპი:
არქიტექტურული პროექტი

ფურცელი : ფურცლები :

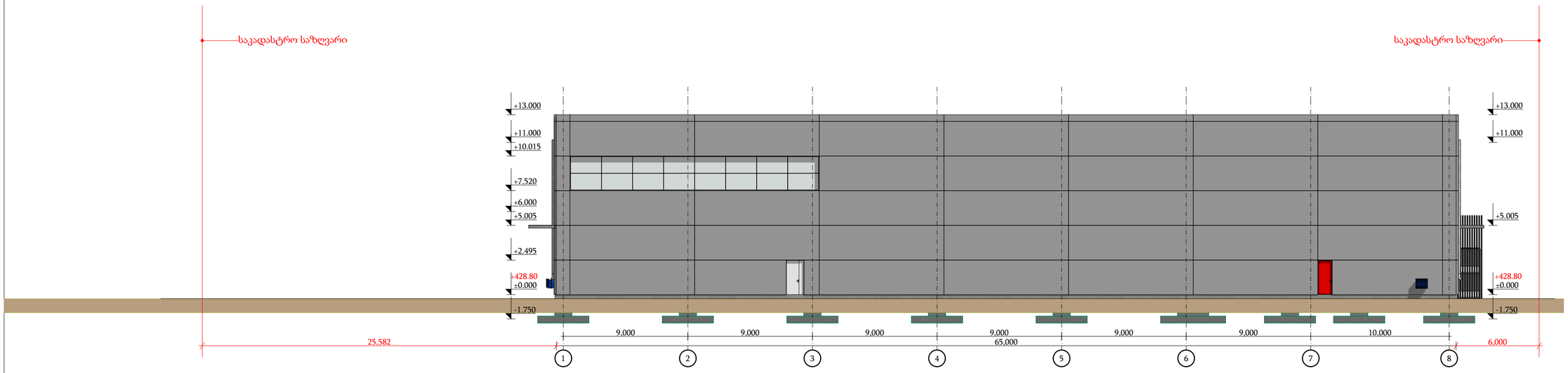

ELEMENT CONSTRUCTION
205208746
შპს "ელემენტ კონსტრუქშენი"

არქიტექტურული ნაწილი

თარიღი:

მისამართი: ქ.თბილისი, დ.გურამიშვილის გამზირი №84

ფუნქციური დანიშნულება: საწყობი

საპროექტო ფასადი 1-10 ღერძებში

მთავარი არქიტექტორი: ბექარი კინწურაშვილი

შეასრულა :

დირექტორი: ლევან ბერაძე

ზომა A-2

მასშტაბი:

ნახაზის ტიპი:
არქიტექტურული პროექტი

ფურცელი :

ფურცლები :

საკადასტრო საზღვარი

საკადასტრო საზღვარი

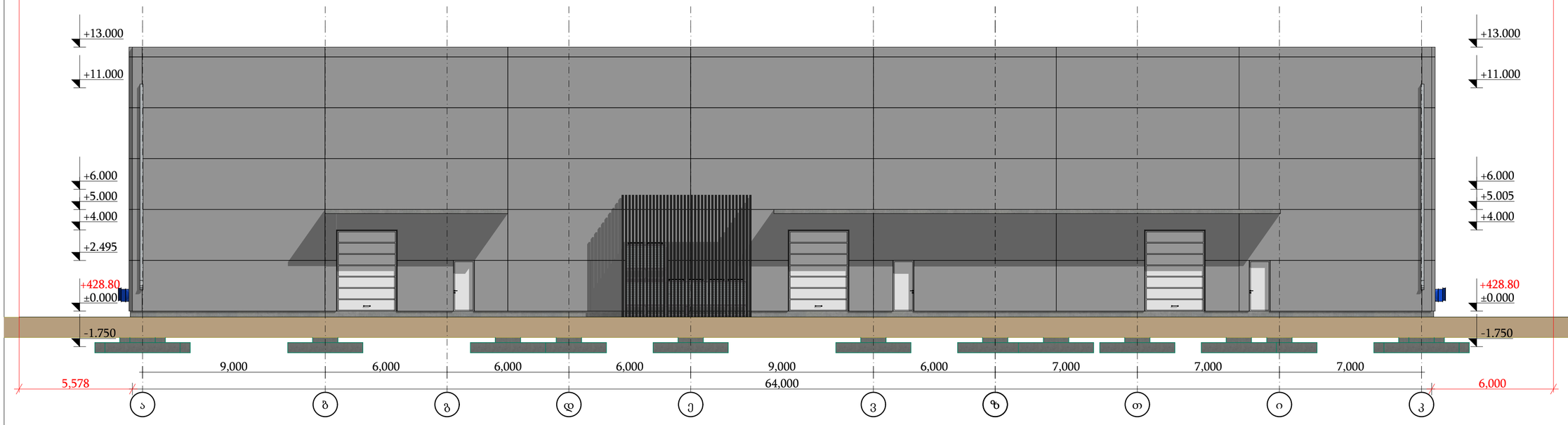

ELEMENT CONSTRUCTION
205208746

არქიტექტურული ნაწილი

თარიღი:

მისამართი: ქ.თბილისი, დ.გურამიშვილის გამზირი №84

ფუნქციური დანიშნულება: საწყობი

საპროექტო ფასადი ა-კ ღერძებში

მთავარი არქიტექტორი: ბექარი კინწურაშვილი

შეასრულა :

დირექტორი: ლევან ბერაძე

ზომა A-2

მასშტაბი:

ნახაზის ტიპი:
არქიტექტურული პროექტი

ფურცელი :

ფურცლები :

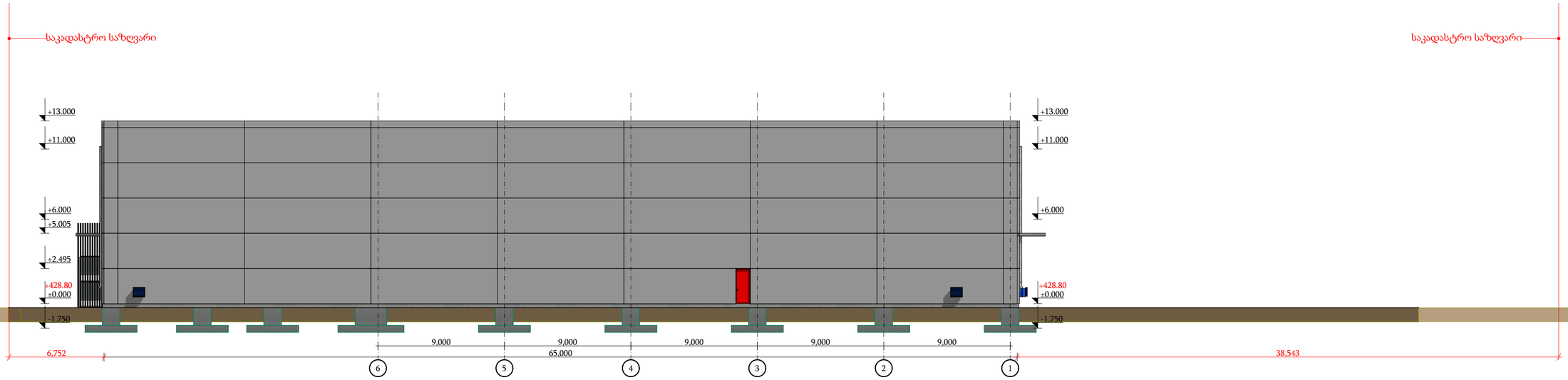

ELEMENT CONSTRUCTION
205208746
შპს "ელემენტ კონსტრუქშენი"

არქიტექტურული ნაწილი

თარიღი:

მისამართი: ქ.თბილისი, დ.გურამიშვილის გამზირი №84

ფუნქციური დანიშნულება: საწყობი

საპროექტო ფასადი 10-1 ღერძებში

მთავარი არქიტექტორი: ბექარი კინწურაშვილი

შეასრულა :

დირექტორი: ლევან ბერაძე

ზომა A-2

მასშტაბი:

ნახაზის ტიპი:
არქიტექტურული პროექტი

ფურცელი : ფურცლები :

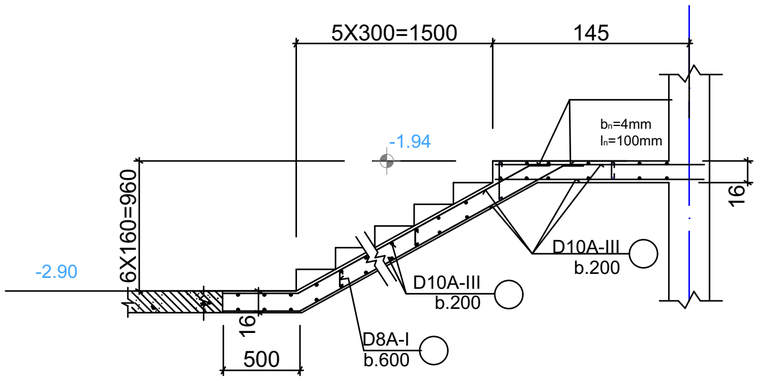

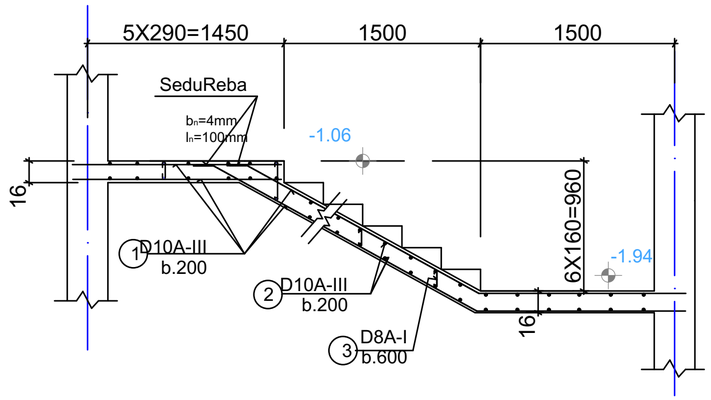

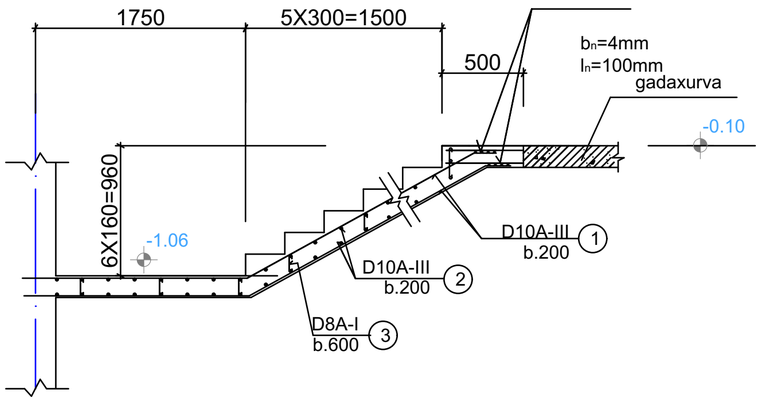

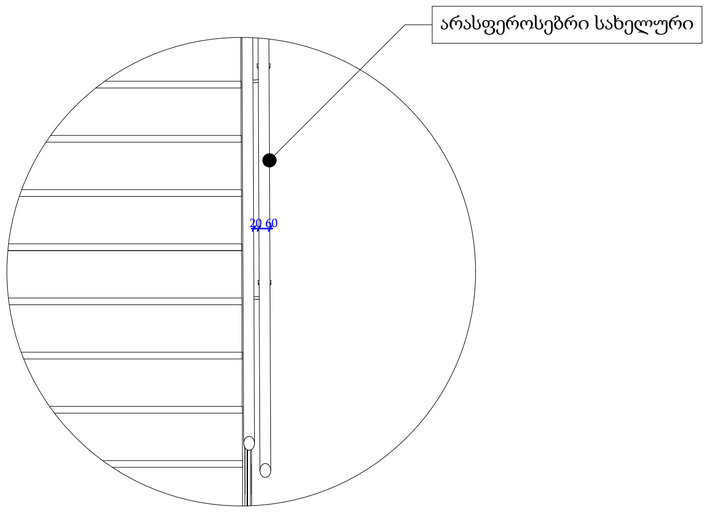

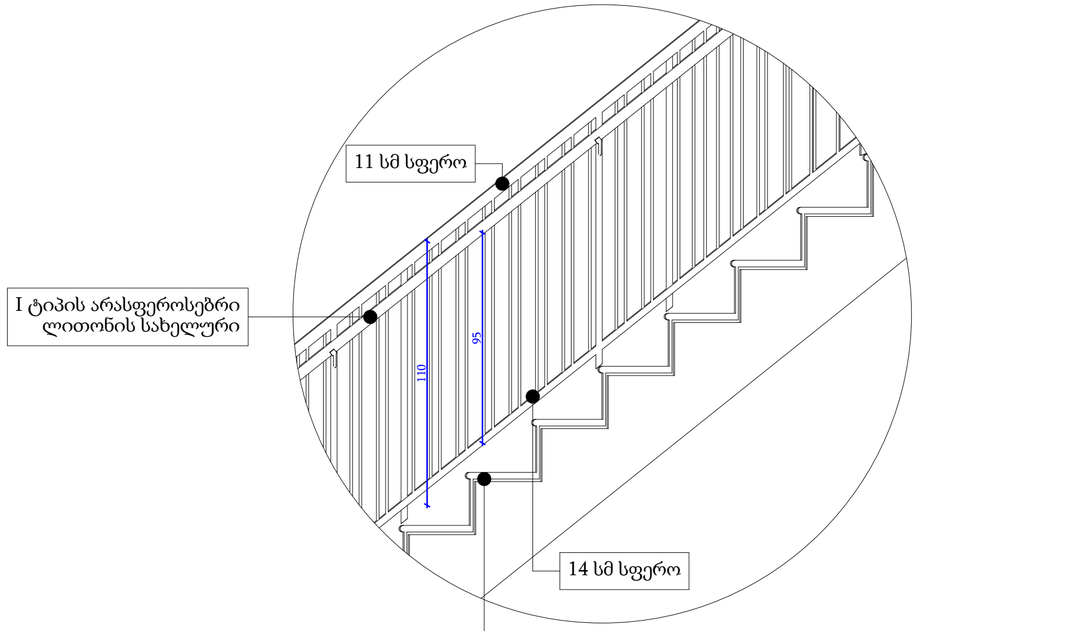

ექსპერტი კონსტრუქციები

არქიტექტურული ნაწილი

ELEMENT CONSTRUCTION 205208746

თარიღი:

მისამართი: ქ.თბილისი, დ.გურამიშვილის გამზირი №84

ფუნქციური დანიშნულება: საწყობი

ჯიბის დეტალები

მთავარი არქიტექტორი: ბექარი კინწურაშვილი

შეასრულა:

დირექტორი: ლევან ბერაძე

ზომა A-2

მასშტაბი:

ნახაზის ტიპი:
არქიტექტურული პროექტი

ფურცელი: ფურცლები:

LOADING SYSTEMS

DOCK EQUIPMENT & INDUSTRIAL DOORS

Dock leveller with extendable lip 60kN

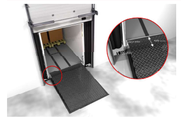

The PoweRamp 232NG is the newest generation electro hydraulic dock leveller including hinged swing lip. The platform top as well as the lip is powered hydraulically.

Operation

The PoweRamp 232NG is operated with only one push button. By keeping the push button pressed, the platform will go up from its resting position, when the highest point is reached, the lip will swing out. When the push button is released, the platform and lip will descend automatically to the level of the vehicle bed.

During loading and unloading, each up and down (suspension) movement of the vehicle is automatically followed. After the loading or unloading process, the push button is pushed in continuously to bring the system back into the rest position.

The PoweRamp 232NG is also suitable to load or unload so-called 'last cargo' below the dock level.

Materials

Platform and lip are made of high-quality durbar plate:

- Platform: Durbar plate 6/8, S235JRG2
- Lip: Durbar plate 12/14, S355J2G3.

Depending on the width, the PoweRamp 232NG is strengthened along its length by means of 10+12 set profiles. These allow the dock leveller platform top to 'twist' and compensate for vehicle 'tilt' caused by off-set loads within the vehicle. The lip will remain in contact with the vehicle bed up to a maximum of 100 mm from the horizontal.

The rear of the top platform is connected to the lower frame by means of three hinges. Pins of drawn steel rods (Ø25mm) are used for the lip hinge at the front of the platform top. These are the centre of the self-cleaning, open lip hinge construction.

The robust front channel absorbs the forces created by an emergency stop, cross traffic and where end loads are being loaded below dock height. The self-supporting characteristics enable either an open or closed pit floor to be selected or for a so-called tail lift opening to be used. Furthermore the front channel fixed to the lower frame provides protection for the hydraulic and mechanical components on the underside of the dock leveller.

Dimensions

If required the PoweRamp 232NG can be delivered tailor-made. However our standard models with a construction height of 600 mm are already available in a large range of platform dimensions.

Metric sizes (mm)					
L2	BH	400 mm lip		500 mm lip*	
		xO	xU	xO	xU
2000	600	225	290	225	305
2500	600	285	280	245	300
3000	600	350	275	230	290
3500	600	315	270	175	285
4000	600	275	270	160	280
Platform width: 2000 or 2250 mm					

Imperial sizes (mm)					
L2	BH	400 mm lip		500 mm lip*	
		xO	xU	xO	xU
2170	600	245	285	245	305
2770	600	320	280	245	290
3370	600	320	275	205	285
Platform width: 1830 or 2100 mm					

L2 = Platform length
BH = Construction height
O = Effective working range above dock height
U = Effective working range below dock height

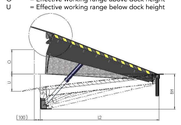

According to EN 1398 the dock leveller is not allowed to be operated outside the permissible gradient range of ± 12.5% (approximately ± 7°).

LOADING SYSTEMS

DOCK EQUIPMENT & INDUSTRIAL DOORS

Dock leveller with extendable lip 60kN

The lip (length 400 mm) has a location length of 225 mm on the vehicle bed, when using 100 mm thick bumpers.

In this instance, the effective working range is measured from the frontside of the bumpers, taking the arc movement of the lip into consideration.

Drive

The hydraulic functions are performed according to a logical sequence, with the aid of the Logic Block System which is operated by varying pressure differences.

The platform is powered by a hydraulic cylinder and the lip by a separate self-dampening cylinder.

The hydraulic system is completely closed and cannot, even under the most extreme circumstances, be affected by dirt, sand or dust. Thanks to the over dimensioned cylinders; a low working pressure of approximately 100 bars is created.

The chrome hardened main cylinder is designed to hold a pressure of 1200 bar. As a precautionary measure, a pipe burst valve is integrated in the main cylinder. The chrome hardened lip cylinder and the hydraulic hoses are designed to hold a pressure of 600 bars.

The compact hydraulic power pack is positioned below the dock leveller's platform and is connected with both cylinders by two hydraulic hoses. This way damage from the outside or by movement is prevented.

All these characteristics ensure a safe hydraulic system with a long life span and a minimum of maintenance.

Standard safety provisions

- Fully hydraulic safety stop by means of a pipe rupture valve built-in cylinder.
- Emergency stop switch with reset facility.
- Non retractable sliding toe guards.
- Robust lip keepers for transverse movements (cross traffic).
- Black / Yellow safety markings.
- Non-removable maintenance strut.
- Motor safeguards by means of a thermal relay.
- Control panel instruction symbols.

Technical Specifications

Standards ..... CE marking
Capacity (EN 1398) ..... 60 kN
Construction height ..... 600 mm
Lip length ..... 400 mm
Lip angle ..... (ca. 4°) 45 mm
Motor ..... 0,75 kW
Power supply ..... 3 phase, neutral and earth / 400 V
Control current ..... 24 V DC
Protection class ..... IP 54
Working pressure ..... ca. 100 bar
Outside diameter main cylinder ..... 65 mm
Outside diameter lip cylinder ..... 45 mm
Operating temperatures between -30° and +50° Celsius
Standard colour ..... (black) RAL 9005

Standards

The PoweRamp 232NG is CE marked. The Loading Systems dock levellers are in accordance with all safety aspects of the European standard EN 1398. The standard load capacity, which is 60 kN (axle load) is designed on a minimum surface contact per wheel of 150 x 150 mm and a maximum gradient of the platform top of 12.5 percent, in accordance with the European standard EN 1398.

Building-in possibilities

Because of varying client specific requirements and constructional elements a large range of build-in possibilities can be offered, such as a suspending (hang-in) frame, box model, permanent steel formwork, (pit boxes) prefab concrete elements, steel stand, dock pods including the thermal iso version. By making the correct choice, considerable cost savings can be made. Detailed building-in drawings are available upon request.

Options

- Various types of pit construction
- Special dimensions
- Greater lip length
- Tapered lip on both sides
- Side segments on lip to adjust to different vehicle widths
- Top platform plate with non-slip coating
- Double main cylinder
- RAL colour as required
- Primer
- Hot dip galvanised with stainless steel shafts
- Platform insulation
- Air seals on three sides of platform
- Rest position switch for control of traffic light, door
- Leveller/ door interlocking
- Integrated control panel including control for door, traffic light, etc.
- Upgraded IP- value
- Other voltage

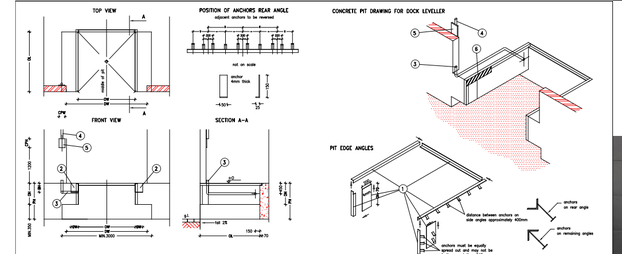

NOTE:
- Anchors must be connected with reinforcement.
- Pit must be square and true.
- Please contact our sales department regarding the tail lift opening.
- Drawing showing the pit forces are available on request.
- At bumper fixation points forces of 50kN to be expected on prefabricated concrete with 30tons lorries and a velocity of 5km/h.

WORK TO BE CARRIED OUT BY CUSTOMER, UNLESS IN ADVANCE OTHERWISE IS AGREED IN WRITING.

Construction# :
– The pit including all markings.
① Supply and fix pit edge angles (⊿ 70x70x7) and steelplate 4mm.
② Provide suitable surface for bumpers, BW/BH.
Electrical supply required to be : *(for electro-hydraulic operated dock levellers)*
– Cable protection between floor level and control panel.
③ 70mm dia duct into pit for electrical connections between dock leveller and control panel.
④ 400v 3 phase neutral and earth terminating in isolator fixed in position shown.
⑤ Provide and fix suitable mounting surface for control panel, CP/NC/PR.
Other:
⑥ Place yellow/black diagonallystriped pit marking.

YOUR DIMENSIONS :		OL	OW	OH	DI	X	Y	FH	DW	DW	BH	CPW	CPH
ITEM :	TYPE :												
ITEM :	TYPE :												
ITEM :	TYPE :												
FH = PLATFORM HEIGHT		DW = BUMPER WIDTH						CPW = CONTROL PANEL WIDTH					
DW = DOOR WIDTH		BH = BUMPER HEIGHT						CPH = CONTROL PANEL HEIGHT					

UNITS IN mm	TYPE	009	010	011	012	013	014	015	016	017	018	608	610	612	708	710	712			
OL = OVERALL LENGTH		2020	2520	3020	3520	4020	2520	3020	3520	4020	4520	2190	2790	3390	2190	2790	3390			
OW = OVERALL WIDTH		2030	2030	2030	2030	2030	2280	2280	2280	2280	2280	1860	1860	1860	2130	2130	2130			
OH = OVERALL HEIGHT		810	810	810	810	810	810	810	810	810	810	810	810	810	810	810	810			
DI = DIAGONAL		2884	3236	3636	4063	4504	3388	3784	4184	4622	4622	2872	3303	3867	3303	3510	4004			
X = ANCHOR DISTANCE WIDTH		725	725	725	725	725	725	725	725	725	725	725	725	725	725	725	725			
Y = EXTRA ANCHOR		295	295	295	295	300	300	300	300	300	295	300	–	–	295	295	295			

LOADING SYSTEMS

PIT DRAWING FOR DOCK LEVELLER 232NG60 60kN

Customer	:	Quotation No.	:
Project	:	No.	:
Architect	:	Date of issue	:
Your Ref. No.	:		
Scale: 1:50	Tolerances: +0/+1.10	Doc. No.	04\FJ2001\3000594-232NG60.DWG Rev.: 11-10-2016

No. 350.020 FA-232NG60

FORCES IN NORMAL SITUATION

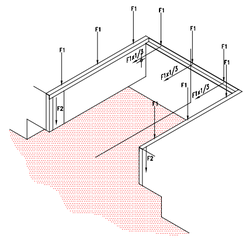

FORCES IN CASE OF EMERGENCY STOP

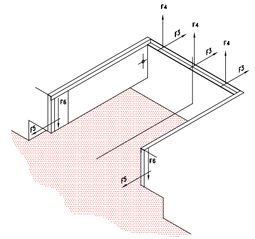

FORCES FOR :		F1	F2	F3	F4	F5	F6
ITEM :	TYPE :						
ITEM :	TYPE :						
ITEM :	TYPE:						

UNITS in kN	valid for capacity of 60kN					
TYPE	F1	F2	F3	F4	F5	F6
606/710	42	82	36	17	148	88
607/810	42	69	48	9	98	58
607/812	42	69	48	9	98	58
611/808	42	71	49	14	121	72
611/810	42	71	49	9	98	58
611/812	42	71	49	9	98	58
706/710	42	82	36	17	148	88
707/810	42	69	48	9	98	58
711/712	42	70	56	4	85	54

f1= Force on one front wheel.
f2= Force with leveller in rest position and fork lift moving.
f2a= Horizontal force in hinge.
f3= Force on rear frame.
f3a= Horizontal force on front side frame.
f4= Vertical force on front side frame.

LOADING SYSTEMS

DRAWING OF THE PIT FORCES FOR DOCK LEVELLER 232NG60 60kN

Customer	:	Quotation No.	:
Project	:	No.	:
Architect	:	Date of issue	:
Your Ref. No.	:		
Scale:	Tolerances:	Doc. No.	04\FJ2001\3000594-232NG60.DWG 01-02-2017

No. 350.000 FA-232NG60





LOADING SYSTEMS

DOCK EQUIPMENT & INDUSTRIAL DOORS

PE dock bumpers

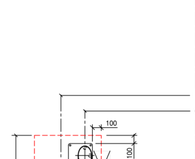

The Loading Systems PE dock bumpers are robust and durable plastic bumpers.

Features

- Good protection of building and vehicle
- Sustainable and environmental friendly
- Made from recycled plastic
- Available for different applications
- Consoles and protection plates are available in RAL 9005 or galvanised finish



PE dock bumper

The PE dock bumper is made from robust and durable polyethylene with a long life and high durability. It contains no harmful substances.

The PE dock bumpers feature countersunk mounting holes and are fully compatible with the rubber version (RB).

Article number	Dimensions WxHxD (mm)	Weight per pair (kg)
915-500	250x500x100	14



Consoles

The consoles are suitable for safe installation of the dock bumper to the building. In a renovation, where the loading dock is damaged, these consoles are indispensable.

All consoles are equipped with studs.

Article number	Dimensions WxHxD (mm)	Weight per pair (kg)	Suitable for
912-750	250x500x10	22	PE500
912-755	250x500x50	33	PE500
912-757	250x500x90	48	PE500

Protection plates

The protection plates are suitable for intensive use of the loading dock. The protection plates are available as straight or bended model.

Article number	Dimensions WxHxD (mm)	Weight per pair (kg)	Suitable for
912-715	230x470x15	18	PE500
912-717*	230x475x15	22	PE500

* bended model



Options

By means of the mounting bracket, the dock bumper can be placed 100 mm above platform level.

As an option, the consoles and protection plates are available in galvanised finish.

Article number	Dimensions WxHxD (mm)	Weight per pair (kg)	Suitable for
912-760	250x80x160	14	All consoles
305	Galvanised finish consoles		
305	Galvanised finish protection plates		

LOADING SYSTEMS

DOCK EQUIPMENT & INDUSTRIAL DOORS

Wheel guides

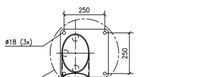

Correct docking with the Loading Systems wheel guides prevents damage.

Features

- Suitable for new and existing buildings
- Available as built-in or surface model in different dimensions
- Standard galvanised finish

Application

Wheel guides ensure correct positioning of the vehicle to the loading and unloading platform. Therefore the risk of damage to the vehicle, the building or the dock leveller or dock shelter reduces considerably. Wheel guides are especially recommended in combination with wide dock levellers and curtain or inflatable dock shelters because in these situations precise positioning of the vehicle is even more important.

The standard galvanised wheel guides are available as built-in and as a surface model. The built-in model is embedded in the concrete foundation. The surface mounted model is equipped with foot plates with mounting holes.

Surface mounted model (with foot plates)

The wheel guides are made from high quality tube with a diameter of 170 mm.

Available as:
- bended model (970-011)
- or straight model (970-012)



Article number	Length (mm)	Height (mm)	Diameter (mm)	Foot plate (mm)	Weight (kg)
970-011	±2060	250	170	295x295	90 kg
970-012	±1850	250	170	295x295	87 kg

Built-in model (to embed into concrete foundation)

The wheel guides are made from high quality tube with a diameter of 170 mm.

Available as:
- bended model (970-013)
- or straight model (970-014)

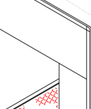

Article number	Length (mm)	Height (mm)	Diameter (mm)	Depth (mm)	Weight (kg)
970-013	±1890	320 *	170	490	94 kg
970-014	±1870	320 *	170	490	91 kg

* after embedding

Low model (with foot plates)



The wheel guides are made from high quality tube with a diameter of 140 mm.

Available as:
- bended model (970-030)
- or straight model (970-025)

Article number	Length (mm)	Height (mm)	Diameter (mm)	Foot plate (mm)	Weight (kg)
970-025	±2000	188	140	375x135	60 kg
970-030	±1850	188	140	375x135	65 kg

Options

Optional a mounting set is available for surface mounted wheel guides.



Type	:	015
Width	:	3400 mm
Height (mm)	:	3400
Projection	:	550 mm
Height top curtain	:	1000 mm
Width side curtains	:	600 mm
Mounting height (mm)	:	4500
Curtain specification	:	3500 gr/m2, sealed

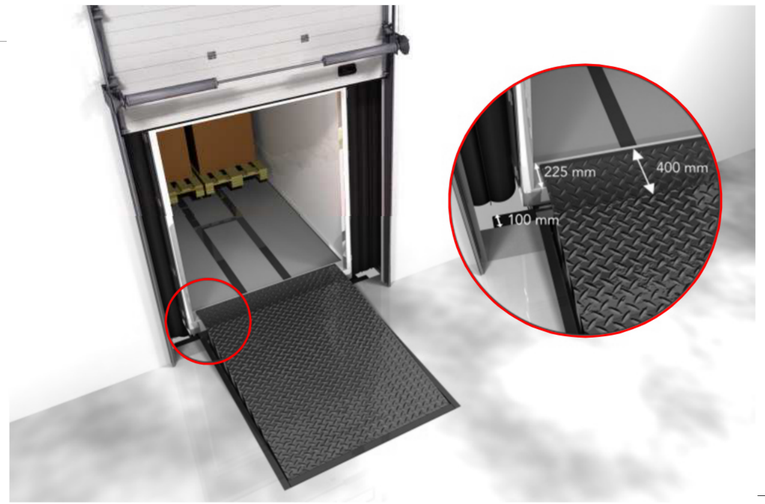

დოკ ლეველერის სამონტაჟო დეტალები

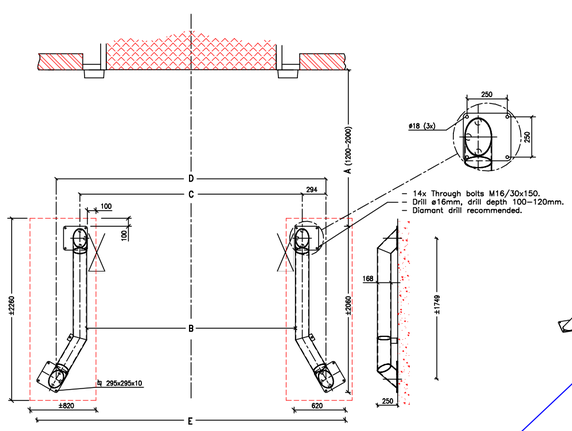

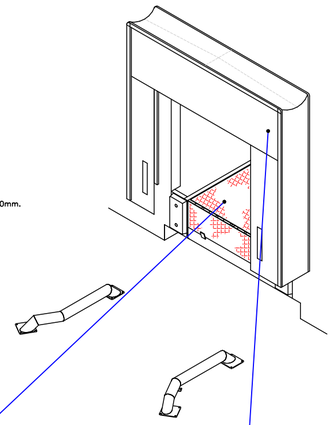

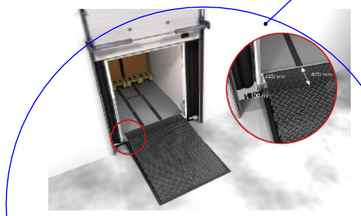

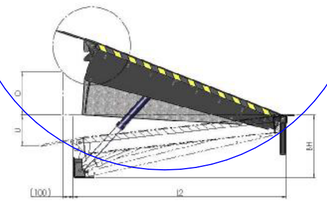

დამცავი ფარდა-შელტერი

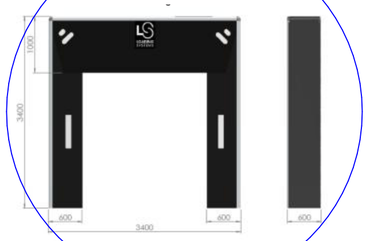

დოკ ლეველერის სამონტაჟო დეტალები

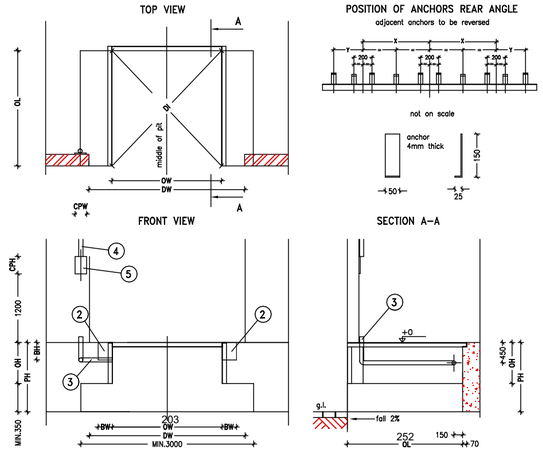

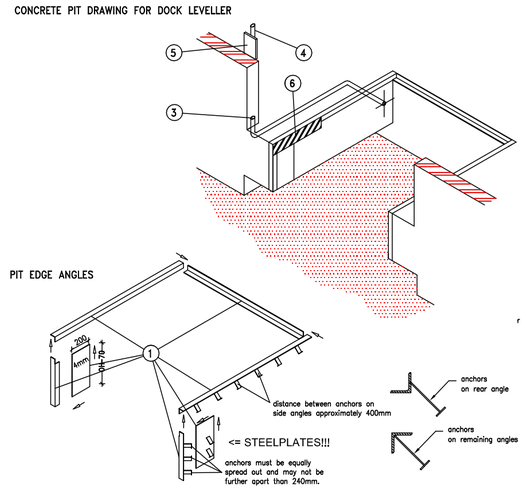

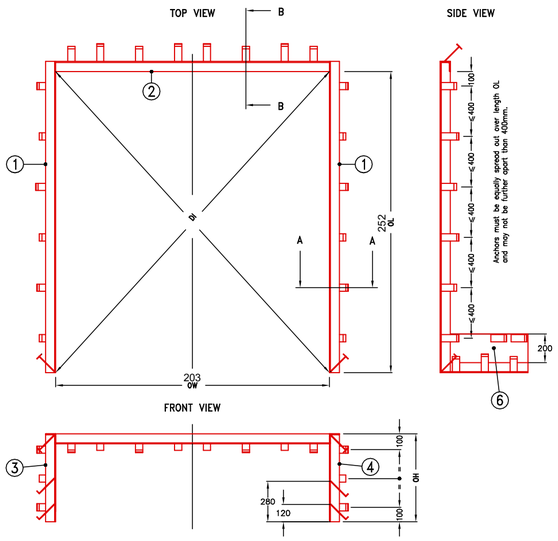

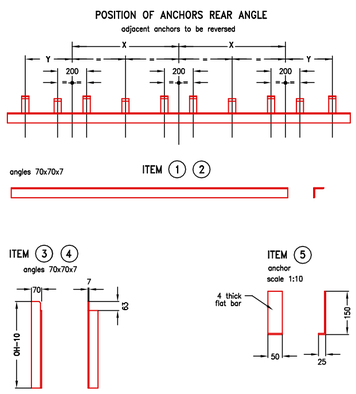

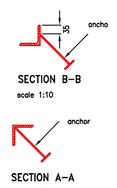

ELEMENT CONSTRUCTION 205208746 შპს "ელემენტ კონსტრუქშენი"

ელემენტ კონსტრუქშენი

არქიტექტურული ნაწილი

თარიღი:

მისამართი: ქ.თბილისი, დ.გურამიშვილის გამზირი №84

ფუნქციური დანიშნულება: საწყობი

დეტალები და სპეციფიკაციები

მთავარი არქიტექტორი: ბექარი კინწურაშვილი

შეასრულა :

დირექტორი: ლევან ბერაძე

ზომა A-2

მასშტაბი:

ნახაზის ტიპი:
არქიტექტურული პროექტი

ფურცელი :

ფურცლები :

ღიობების სპეციფიკაცია										
რაოდენობა	1	1	1	1	1	2	2	7	9	11
W x H Size	1,300×2,500	1,800×1,300	1,800×2,700	18,015×2,495	40,100×2,500	1,500×4,000	150×150	1,040×2,500	3,000×4,000	1,000×2,500
2D სიმბოლო										
3D სიმბოლო	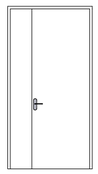			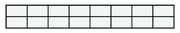		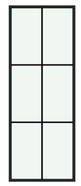		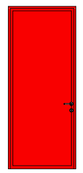	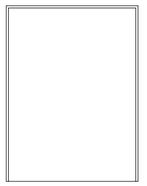	

ELEMENT CONSTRUCTION
205208746
შპს "ელემენტ კონსტრუქშენი"

არქიტექტურული ნაწილი

თარიღი:

მისამართი: ქ.თბილისი, დ.გურამიშვილის გამზირი №84

ფუნქციური დანიშნულება: საწყობი

ჯარ-ფენჯრის სპეციფიკაცია

მთავარი არქიტექტორი: ბექარი კინწურაშვილი

შეასრულა :

დირექტორი: ლევან ბერაძე

ზომა A-2

მასშტაბი:

ნახაზის ტიპი:
არქიტექტურული პროექტი

ფურცელი : ფურცლები :