პროექტის დასახელება: კომერციული შენობის კეთილმოწყობა, ქ.თბილისი
დაბა წყნეთი, ა. ჭავჭავაძის ქ.№12 , ს/კ №01.20.01.037.014
პროექტის სტადია: მუშა პროექტი

დირექტორი: დავით ქევანიშვილი

ფორმატი / A-2

თბილისი 2023

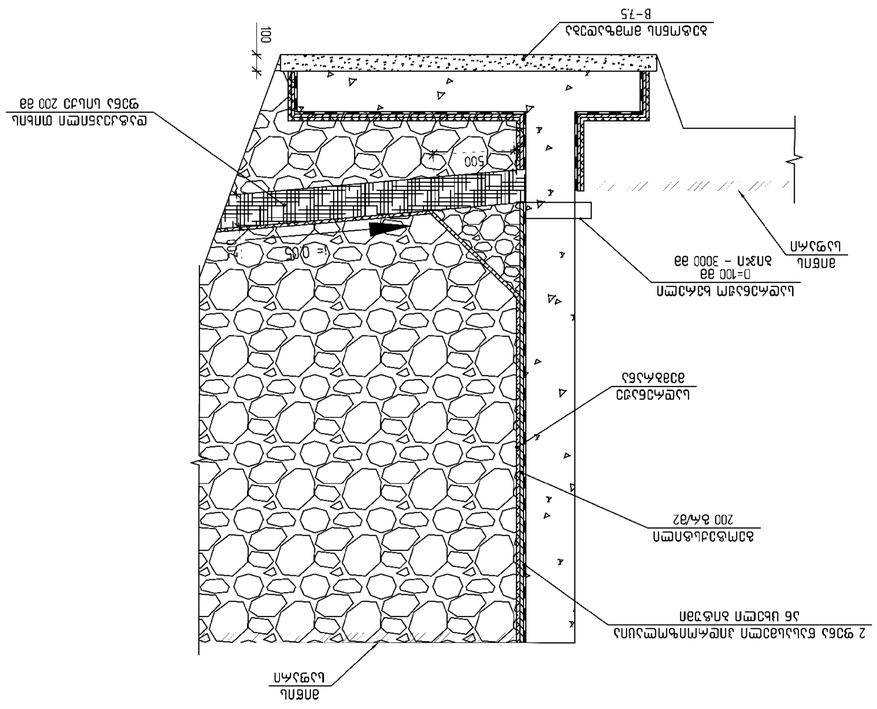

Фасад и разрез ограждения площадки

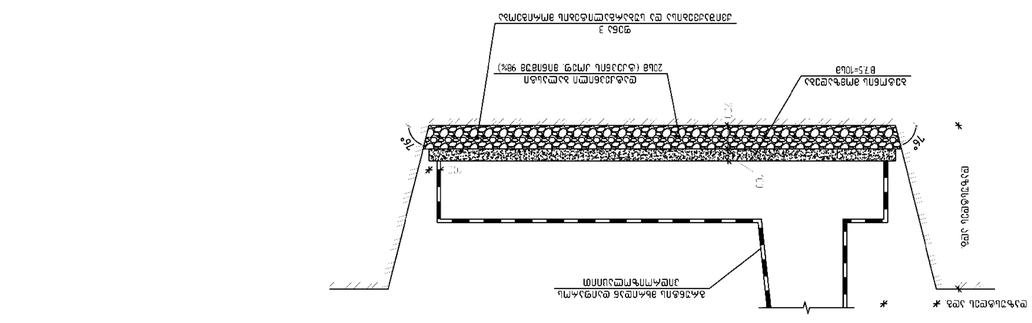
Ограждение площадки для мусорных контейнеров
Существующий асфальтобетонный тротуар
Проектируемый асфальтобетонный тротуар
Существующий бортовой камень
Проектируемый бортовой камень
Существующий газон
Проектируемый газон
Существующий грунт
Проектируемый грунт
Существующий бетонный тротуар
Проектируемый бетонный тротуар
Существующий бетонный бортовой камень
Проектируемый бетонный

ЗМ№	ЗОБПЗЗБЗ	Ø Ъ Ъ Ъ Ъ Ø Ø Ъ	ЧЪЗМШ	ЗЪЪЪ Ъ7Ø Ъ8	ЗЪЪЪ Ъ8
		ЪЪЗЧЧЗЧЗЧО ЗЧЗЧЗЧЗЧО			
		ЗЪЪЪЪШЗЗЪЗЛ			
		ЪЗОЧЧЗ Ø25		42.37	м³
		ЗЧЧЗЧЗЧЗЧЗЛ ЪЗЧЗЧЗЧЗЧЗЛ ЗЧЧЗЧЗЧЗЧЗЛ			
1	ГОСТ Р 52544-2006	D8 A500C L=12000	10	4.74	47.4
2	ГОСТ Р 52544-2006	D8 A500C L=450	88	0.18	15.8
3	ГОСТ Р 52544-2006	D8 A500C L=400	24	0.16	3.8
4	ГОСТ Р 52544-2006	D8 A500C L=390	11	0.15	1.6
5	ГОСТ Р 52544-2006	D8 A500C L=1340	34	0.53	18.0
6	ГОСТ Р 52544-2006	D8 A500C L=1260	16	0.50	8.0
7	ГОСТ Р 52544-2006	D8 A500C L=1200	9	0.47	4.2
8	ГОСТ Р 52544-2006	D12 A500C L=12000	151	10.66	1609.7
9	ГОСТ Р 52544-2006	D14 A500C L=12000	5	14.50	72.5
10	ГОСТ Р 52544-2006	ø14 A500C L=2420	17	2.92	49.6
11	ГОСТ Р 52544-2006	ø14 A500C L=2340	12	2.83	34.0
12	ГОСТ Р 52544-2006	ø14 A500C L=1915	12	2.31	27.7
13	ГОСТ Р 52544-2006	ø14 A500C L=1855	27	2.24	60.5
14	ГОСТ Р 52544-2006	ø12 A500C L=3040	12	2.70	32.4
15	ГОСТ Р 52544-2006	ø12 A500C L=2420	17	2.15	36.5
16	ГОСТ Р 52544-2006	ø12 A500C L=2030	70	1.80	126.0
17	ГОСТ Р 52544-2006	ø12 A500C L=1655	43	1.47	63.2
18	ГОСТ Р 52544-2006	ø12 A500C L=1540	32	1.37	43.8
19	ГОСТ Р 52544-2006	ø12 A500C L=1500	32	1.33	42.6
20	ГОСТ Р 52544-2006	ø12 A500C L=1320	150	1.17	175.5
21	ГОСТ Р 52544-2006	ø12 A500C L=1215	12	1.08	13.0
22	ГОСТ Р 52544-2006	ø12 A500C L=1155	27	1.03	27.8
23	ГОСТ Р 52544-2006	ø12 A500C L=1055	75	0.94	70.5
24	ГОСТ Р 52544-2006	ø12 A500C L=1050	32	0.93	29.8

ЪЗЪЧЧЗЧЗЧЗЧЗЛ ЗЧЗЧЗЧЗЧЗЛ ЗЧЧЗЧЗЧЗЧЗЛ ЗЪЧЗЧЗЧЗЧЗЛ ЗЧЧЗЧЗЧЗЧЗЛ ЗЧЧЗЧЗЧЗЧЗЛ ЗЧ

ბაზის ოპტიმიზაცია ბეტონის ხარჯის შემცირების მიზნით

ბაზის ოპტიმიზაცია ბეტონის ხარჯის შემცირების მიზნით

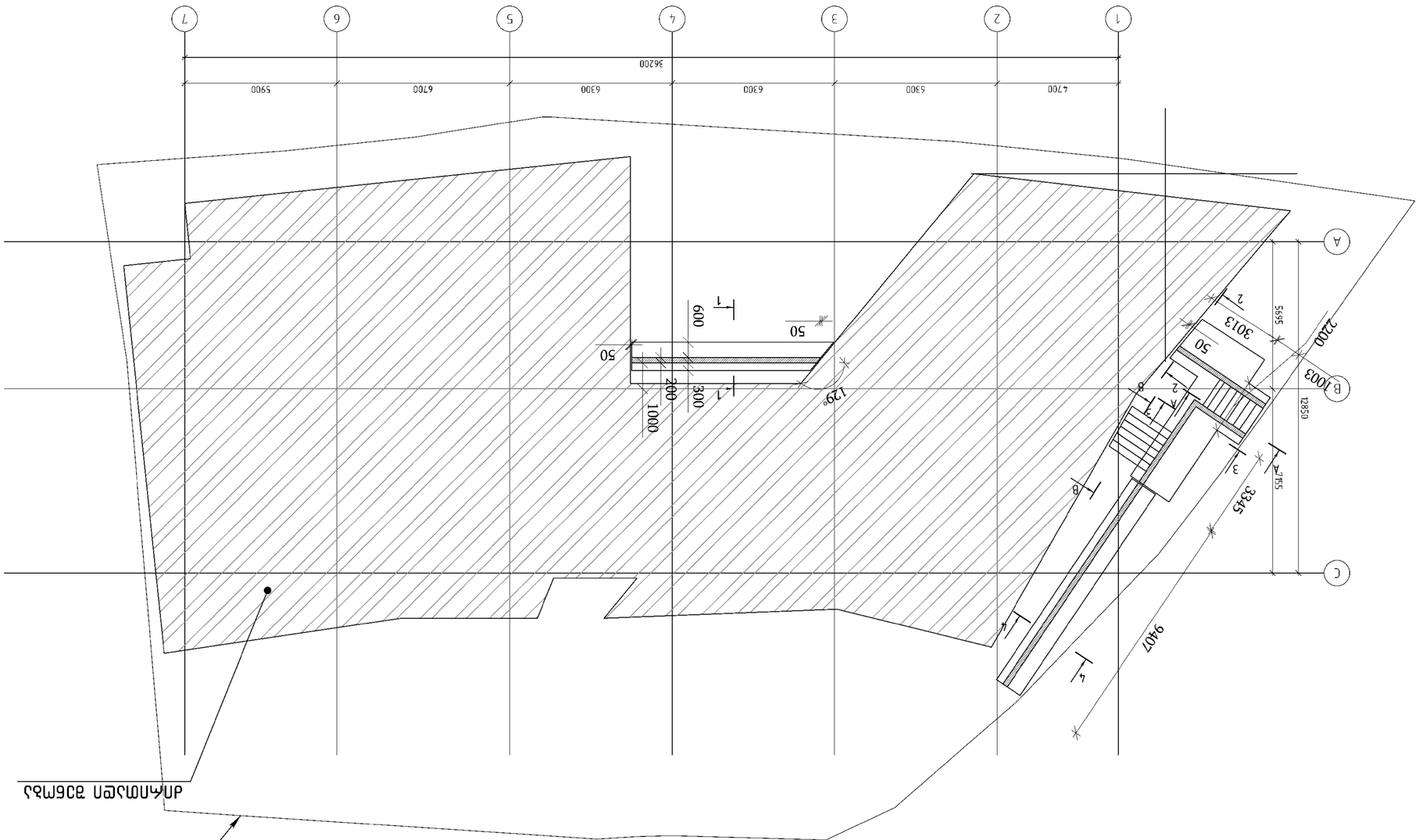

ბაზის ოპტიმიზაცია ბეტონის ხარჯის შემცირების მიზნით
მ 1:125

ბეტონის ბაზის ოპტიმიზაცია

№п.	Обозначение	Наименование	Кол.	Масса ед. кг	Масса общ. кг
		Документация			
1	ГОСТ Р 52544-2006	D8 A500C L=310	16	0.12	1.9
2	ГОСТ Р 52544-2006	D8 A500C L=1100	16	0.43	6.9
3	ГОСТ Р 52544-2006	D8 A500C L=400	16	0.16	2.6
4	ГОСТ Р 52544-2006	D10 A500C L=12000	17	7.39	125.6
		Материалы			
		Бетон В25		8.40	м³
		Арматура класса А500С			
		Ø8		11.40	1
		Ø10		125.60	137.000000
		Закладные детали			
		Итого			16.80

Ведомость арматурных и закладных изделий

Марка	Эскиз	Ø	Кол.	Общ. кол.	Масса ед. кг	Масса общ. кг
1	60 60 40 110 40 ø8 ъ.600	8	16	16	0.43	6.9
2	300 100 300 ø8 ъ.800	8	16	16	0.12	1.9
3	200 40 60 40 ø8 ъ.600	8	16	16	0.16	2.6
4	500 ø10 ъ.200	10	17	17	7.39	125.6

Спецификация элементов монолитных железобетонных конструкций

Вид А-А

Вид В-В

Вид Г-Г

ЗАО "ЭНЕРГОКАПИТАЛЬ"
ЗАО "ЭНЕРГОСЕРВИС ЭЛЕКТРОС

Cantilever wall analysis

Input data

Project

Date : 07.12.2022

Settings

Russia

Materials and standards

Concrete structures : SNiP 52-01-2003
SNiP - input coefficients according to SNIP standards

Coefficients according to SNiP			
Combination coefficient :	γ_k =	1.00	[–]
Coefficient of action conditions :	γ_c =	0.90	[–]
Coefficient of importance of structure :	γ_n =	1.10	[–]

Wall analysis

Active earth pressure calculation : SP 22.13330.2016
Passive earth pressure calculation : SP 22.13330.2016
Earthquake analysis : Mononobe-Okabe
Shape of earth wedge : Calculate as skew
Base key : The base key is considered as inclined footing bottom
Allowable eccentricity : 0.333
Verification methodology : Safety factors (ASD)

Safety factors			
Permanent design situation			
Safety factor for overturning :	SF_o =	1.50	[–]
Safety factor for sliding resistance :	SF_s =	1.50	[–]
Safety factor for bearing capacity :	SF_b =	1.50	[–]

Safety factors			
Seismic design situation			
Safety factor for overturning :	SF_o =	1.00	[–]
Safety factor for sliding resistance :	SF_s =	1.00	[–]
Safety factor for bearing capacity :	SF_b =	1.00	[–]

Material of structure

Unit weight γ = 23.00 kN/m^3
Analysis of concrete structures carried out according to the standard SNiP 52-01-2003.

Concrete: B25
Compressive strength R_b = 14.50 MPa
Tensile strength R_{bt} = 1.05 MPa

Longitudinal steel: A500
Tensile strength R_s = 435.00 MPa

Geometry of structure

No.	Coordinate X [m]	Depth Z [m]
1	0.00	-0.36
2	0.00	2.54

[GEO5 - Cantilever Wall | version 5.2021.68.0 | hardware key 11510 / 1 | Qengineering | Copyright © 2022 Fine spol. s r.o. All Rights Reserved | www.finesoftware.eu]
[Gross Energy Group | +995 577 545 777| d.tkebuchava@gegroup.org| http://www.gegroup.org]

No.	Coordinate X [m]	Depth Z [m]
3	1.40	2.54
4	1.40	2.84
5	-0.55	2.84
6	-0.55	2.54
7	-0.25	2.54
8	-0.25	-0.36

The origin [0,0] is located at the most upper right point of the wall.
Wall section area = 1.31 m^2.

Basic soil parameters

No.	Name	Pattern	φ_{ef} [°]	c_{ef} [kPa]	γ [kN/m^3]	γ_{su} [kN/m^3]	δ [°]
1	nayari		25.00	0.00	20.00	10.00	0.00
2	sge-1		21.00	0.23	18.50	8.50	0.00

Soil parameters to compute pressure at rest

No.	Name	Pattern	Type calculation	φ_{ef} [°]	v [–]	OCR [–]	K_r [–]
1	nayari		cohesionless	25.00	-	-	-
2	sge-1		cohesive	-	0.35	-	-

Soil parameters

nayari

Unit weight : $\gamma = 20.00$ kN/m^3
Stress-state : effective
Angle of internal friction : $\varphi_{ef} = 25.00$ °
Cohesion of soil : $c_{ef} = 0.00$ kPa
Angle of friction struc.-soil : $\delta = 0.00$ °
Soil : cohesionless
Saturated unit weight : $\gamma_{sat} = 20.00$ kN/m^3

sge-1

Unit weight : $\gamma = 18.50$ kN/m^3
Stress-state : effective
Angle of internal friction : $\varphi_{ef} = 21.00$ °
Cohesion of soil : $c_{ef} = 0.23$ kPa
Angle of friction struc.-soil : $\delta = 0.00$ °
Soil : cohesive
Poisson's ratio : $v = 0.35$
Saturated unit weight : $\gamma_{sat} = 18.50$ kN/m^3

Backfill

Assigned soil : nayari
Slope = 45.00 °

[GEO5 - Cantilever Wall | version 5.2021.68.0 | hardware key 11510 / 1 | Qengineering | Copyright © 2022 Fine spol. s r.o. All Rights Reserved | www.finesoftware.eu]
[Gross Energy Group | +995 577 545 777| d.tkebuchava@gegroup.org| http://www.gegroup.org]

Geological profile and assigned soils

No.	Thickness of layer t [m]	Depth z [m]	Assigned soil	Pattern
1	-	0.00 .. ∞	sge-1	

Foundation

Type of foundation : soil from geological profile

Terrain profile

Terrain behind the structure is flat.
Depth of terrain below the top of wall h = 0.36 m.

Water influence

Ground water table is located below the structure.

Input surface surcharges

No.	Surcharge new	Surcharge change	Action	Mag.1 [kN/m^2]	Mag.2 [kN/m^2]	Ord.x x [m]	Length l [m]	Depth z [m]
1	Yes		permanent	10.00				on terrain

Resistance on front face of the structure

Resistance on front face of the structure: 1/2 pass., 1/2 at rest
Soil on front face of the structure - nayari
Angle of friction struc.-soil $\delta = 0.00$ °
Soil thickness in front of structure $h = 1.20$ m

Terrain in front of structure is flat.

Settings of the stage of construction

Design situation : permanent

The wall is free to move. Active earth pressure is therefore assumed.

Verification No. 1 (Stage of construction 1)

Forces acting on construction

Name	F_{hor} [kN/m]	App.Pt. z [m]	F_{vert} [kN/m]	App.Pt. x [m]	Design coefficient
Weight - wall	0.00	-1.04	30.13	0.67	1.000
FF resistance	-21.86	-0.40	0.03	-0.15	1.000
Weight - earth wedge	0.00	-1.03	30.77	1.02	1.000
Active pressure	20.85	-0.85	21.68	1.43	1.000
Surch.1 - surface	7.40	-1.43	7.52	1.25	1.000

Verification of complete wall

Check for overturning stability
Resisting moment $M_{res} = 75.15$ kNm/m
Overturning moment $M_{ovr} = 19.52$ kNm/m

Safety factor = 3.85 > 1.50
Wall for overturning is SATISFACTORY

Check for slip
Resisting horizontal force $H_{res} = 28.61$ kN/m
Active horizontal force $H_{act} = 6.39$ kN/m

Safety factor = 4.48 > 1.50
Wall for slip is SATISFACTORY

Overall check - WALL is SATISFACTORY

[GEO5 - Cantilever Wall | version 5.2021.68.0 | hardware key 11510 / 1 | Qengineering | Copyright © 2022 Fine spol. s r.o. All Rights Reserved | www.finesoftware.eu]
[Gross Energy Group | +995 577 545 777| d.tkebuchava@gegroup.org| http://www.gegroup.org]

Name : Verification | **Stage - analysis : 1 - 1**

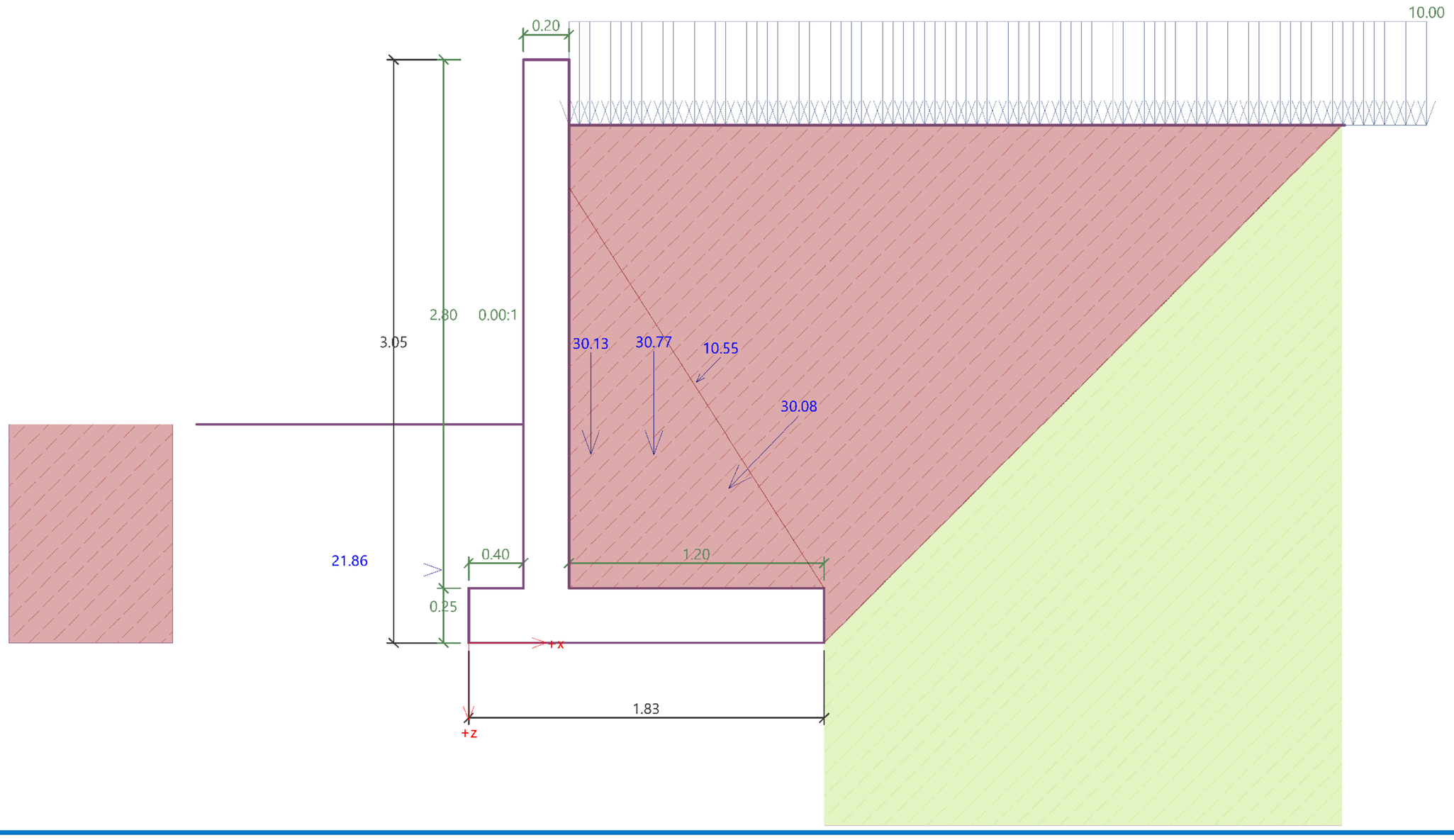

Bearing capacity of foundation soil (Stage of construction 1)

Design load acting at the center of footing bottom

No.	Moment [kNm/m]	Norm. force [kN/m]	Shear Force [kN/m]	Eccentricity [–]	Stress [kPa]
1	15.56	90.14	6.39	0.089	56.17

Service load acting at the center of footing bottom

No.	Moment [kNm/m]	Norm. force [kN/m]	Shear Force [kN/m]
1	15.56	90.14	6.39

Verification of foundation soil

Stress in the footing bottom : rectangle

Eccentricity verification

Max. eccentricity of normal force $e = 0.089$

Maximum allowable eccentricity $e_{alw} = 0.333$

Eccentricity of the normal force is SATISFACTORY

Verification of bearing capacity

Max. stress at footing bottom $\sigma = 56.17$ kPa

Bearing capacity of foundation soil $R_d = 250.00$ kPa

Safety factor = 4.45 > 1.50

Bearing capacity of foundation soil is SATISFACTORY

Overall verification - bearing capacity of found. soil is SATISFACTORY

[GEO5 - Cantilever Wall | version 5.2021.68.0 | hardware key 11510 / 1 | Qengineering | Copyright © 2022 Fine spol. s r.o. All Rights Reserved | www.finesoftware.eu]
[Gross Energy Group | +995 577 545 777| d.tkebuchava@gegroup.org| http://www.gegroup.org]

Dimensioning No. 1 (Stage of construction 1)

Wall stem check - front reinf.

Forces acting on construction

Name	F_{hor} [kN/m]	App.Pt. z [m]	F_{vert} [kN/m]	App.Pt. x [m]	Design coefficient
Weight - wall	0.00	-1.45	16.67	0.12	1.000
FF resistance	-12.28	-0.30	0.00	0.00	1.000
Pressure at rest	37.21	-0.85	0.00	0.25	1.000
Surch.1 - surface	14.66	-1.27	0.00	0.25	1.000

Wall stem check - front reinf.

Front reinforcement is not required.

Wall stem check - back reinf.

Forces acting on construction

Name	F_{hor} [kN/m]	App.Pt. z [m]	F_{vert} [kN/m]	App.Pt. x [m]	Design coefficient
Weight - wall	0.00	-1.45	16.67	0.12	1.000
FF resistance	-12.28	-0.30	0.00	0.00	1.000
Pressure at rest	37.21	-0.85	0.00	0.25	1.000
Surch.1 - surface	14.66	-1.27	0.00	0.25	1.000

Wall stem check - back reinf.

Wall check at the construction joint 2.90 m from the wall crest
Reinforcement and dimensions of the cross-section
5 prof. 14.0 mm, cover 50.0 mm

Inputted reinforcement area		=	769.7	mm^2				
Required reinforcement area		=	579.0	mm^2				
Cross-section width		=	1.00	m				
Cross-section height		=	0.25	m				
Reinforcement ratio	μ_s	=	0.40	%	>	0.10	%	= $\mu_{s,min}$
Position of neutral axis	x	=	0.04	m	<	0.10	m	= ξ_R
Ultimate shear force	V_{ult}	=	506.63	kN	>	39.59	kN	= Q
Ultimate moment	M_{ult}	=	66.00	kNm	>	46.42	kNm	= M

Cross-section is SATISFACTORY.

Wall jump check

Forces acting on construction

Name	F_{hor} [kN/m]	App.Pt. z [m]	F_{vert} [kN/m]	App.Pt. x [m]	Design coefficient
Weight - wall	0.00	-1.04	30.13	0.67	1.000
FF resistance	-21.86	-0.40	0.03	-0.15	1.000
Weight - earth wedge	0.00	-1.03	30.77	1.02	1.000
Active pressure	20.85	-0.85	21.68	1.43	1.000
Surch.1 - surface	7.40	-1.43	7.52	1.25	1.000

Wall jump check

Reinforcement and dimensions of the cross-section
5 prof. 12.0 mm, cover 50.0 mm

Inputted reinforcement area	=	565.5	mm^2	
Required reinforcement area	=	244.0	mm^2	
Cross-section width	=	1.00	m	
Cross-section height	=	0.30	m	

[GEO5 - Cantilever Wall | version 5.2021.68.0 | hardware key 11510 / 1 | Qengineering | Copyright © 2022 Fine spol. s r.o. All Rights Reserved | www.finesoftware.eu]
[Gross Energy Group | +995 577 545 777| d.tkebuchava@gegroup.org| http://www.gegroup.org]

Reinforcement ratio	μ_s	=	0.23	%	>	0.10	%	=	$\mu_{s,min}$
Position of neutral axis	x	=	0.02	m	<	0.12	m	=	ξ_R
Ultimate shear force	V_{ult}	=	640.50	kN	>	18.03	kN	=	Q
Ultimate moment	M_{ult}	=	57.93	kNm	>	8.31	kNm	=	M

Cross-section is SATISFACTORY.

Wall heel check

Forces acting on construction

Name	F_{hor} [kN/m]	App.Pt. z [m]	F_{vert} [kN/m]	App.Pt. x [m]	Design coefficient
Weight - wall	0.00	-0.15	9.66	1.25	1.000
Weight - earth wedge	0.00	-1.03	30.77	1.02	1.000
Active pressure	20.85	-0.85	21.68	1.43	1.000
Surch.1 - surface	7.40	-1.43	7.52	1.25	1.000
Contact stress	0.00	0.00	-55.02	1.15	1.000

Wall heel check

Reinforcement and dimensions of the cross-section
5 prof. 14.0 mm, cover 50.0 mm

Inputted reinforcement area		=	769.7	mm^2					
Required reinforcement area		=	369.0	mm^2					
Cross-section width		=	1.00	m					
Cross-section height		=	0.30	m					
Reinforcement ratio	μ_s	=	0.32	%	>	0.10	%	=	$\mu_{s,min}$
Position of neutral axis	x	=	0.02	m	<	0.12	m	=	ξ_R
Ultimate shear force	V_{ult}	=	637.87	kN	>	14.61	kN	=	Q
Ultimate moment	M_{ult}	=	77.49	kNm	>	38.11	kNm	=	M

Cross-section is SATISFACTORY.

Name : Dimensioning | **Stage - analysis : 1 - 1**

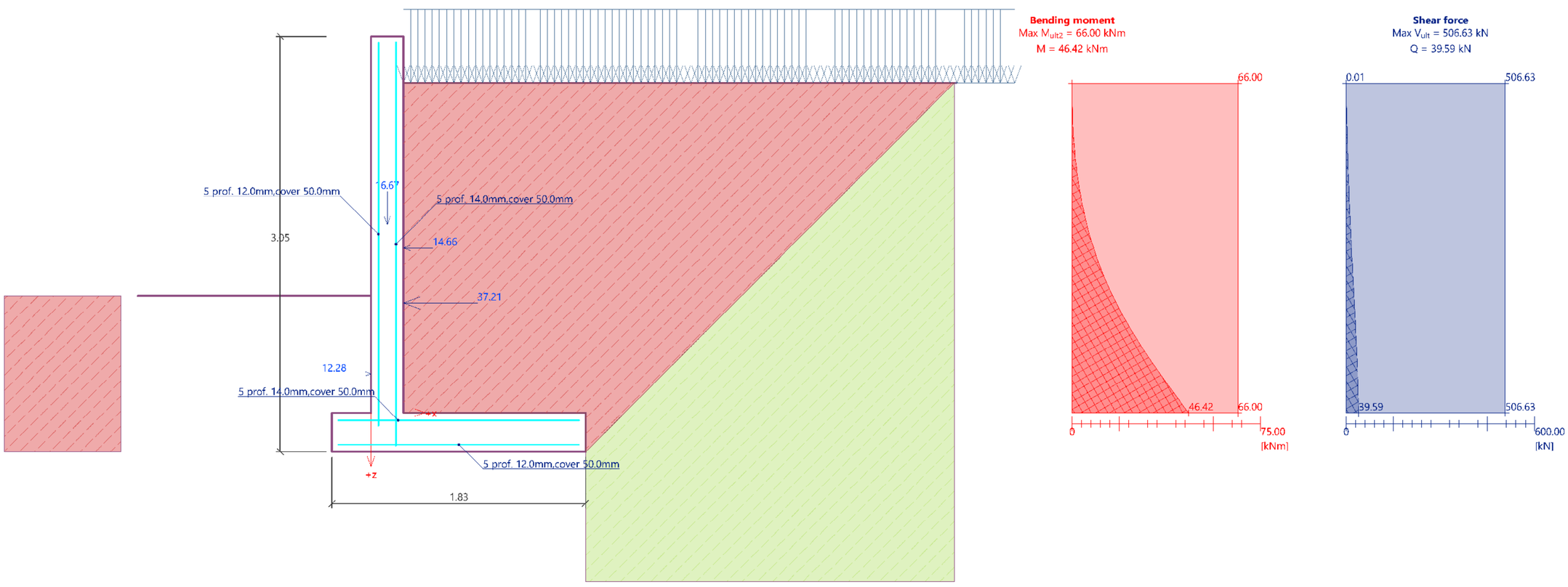

[GEO5 - Cantilever Wall | version 5.2021.68.0 | hardware key 11510 / 1 | Qengineering | Copyright © 2022 Fine spol. s r.o. All Rights Reserved | www.finesoftware.eu]
[Gross Energy Group | +995 577 545 777| d.tkebuchava@gegroup.org| http://www.gegroup.org]

Input data (Stage of construction 2)

Geological profile and assigned soils

No.	Thickness of layer t [m]	Depth z [m]	Assigned soil	Pattern
1	-	0.00 .. ∞	sge-1	

Foundation

Type of foundation : soil from geological profile

Terrain profile

Terrain behind the structure is flat.
Depth of terrain below the top of wall h = 0.36 m.

Water influence

Ground water table is located below the structure.

Input surface surcharges

No.	Surcharge new	Surcharge change	Action	Mag.1 [kN/m^2]	Mag.2 [kN/m^2]	Ord.x x [m]	Length l [m]	Depth z [m]
1	No	Yes	permanent	10.00				on terrain

Resistance on front face of the structure

Resistance on front face of the structure: 1/2 pass., 1/2 at rest
Soil on front face of the structure - nayari
Angle of friction struc.-soil $\delta = 0.00$ °
Soil thickness in front of structure $h = 1.20$ m

Terrain in front of structure is flat.

Earthquake

Factor of horizontal acceleration $K_h = 0.0800$
Factor of vertical acceleration $K_v = 0.0000$

Water below the GWT is restricted.

Settings of the stage of construction

Design situation : seismic
The wall is free to move. Active earth pressure is therefore assumed.

Verification No. 1 (Stage of construction 2)

Forces acting on construction

Name	F_{hor} [kN/m]	App.Pt. z [m]	F_{vert} [kN/m]	App.Pt. x [m]	Design coefficient
Weight - wall	0.00	-1.04	30.13	0.67	1.000
Earthq.- constr.	2.41	-1.04	0.00	0.67	1.000
FF resistance	-21.86	-0.40	0.03	-0.15	1.000
Weight - earth wedge	0.00	-1.03	30.77	1.02	1.000
Earthquake - soil wedge	2.46	-1.03	0.00	1.02	1.000
Active pressure	20.85	-0.85	21.68	1.43	1.000
Earthq.- act.pressure	4.74	-1.88	5.77	1.07	1.000
Surch.1 - surface	7.40	-1.43	7.52	1.25	1.000

Verification of complete wall

Check for overturning stability

Resisting moment $M_{res} = 80.19$ kNm/m
Overturning moment $M_{ovr} = 33.46$ kNm/m

Safety factor = 2.40 > 1.00

[GEO5 - Cantilever Wall | version 5.2021.68.0 | hardware key 11510 / 1 | Qengineering | Copyright © 2022 Fine spol. s r.o. All Rights Reserved | www.finesoftware.eu]
[Gross Energy Group | +995 577 545 777| d.tkebuchava@gegroup.org| http://www.gegroup.org]

Wall for overturning is SATISFACTORY

Check for slip

Resisting horizontal force H_{res} = 30.38 kN/m

Active horizontal force H_{act} = 16.00 kN/m

Safety factor = 1.90 > 1.00

Wall for slip is SATISFACTORY

Overall check - WALL is SATISFACTORY

Name : Verification | **Stage - analysis : 2 - 1**

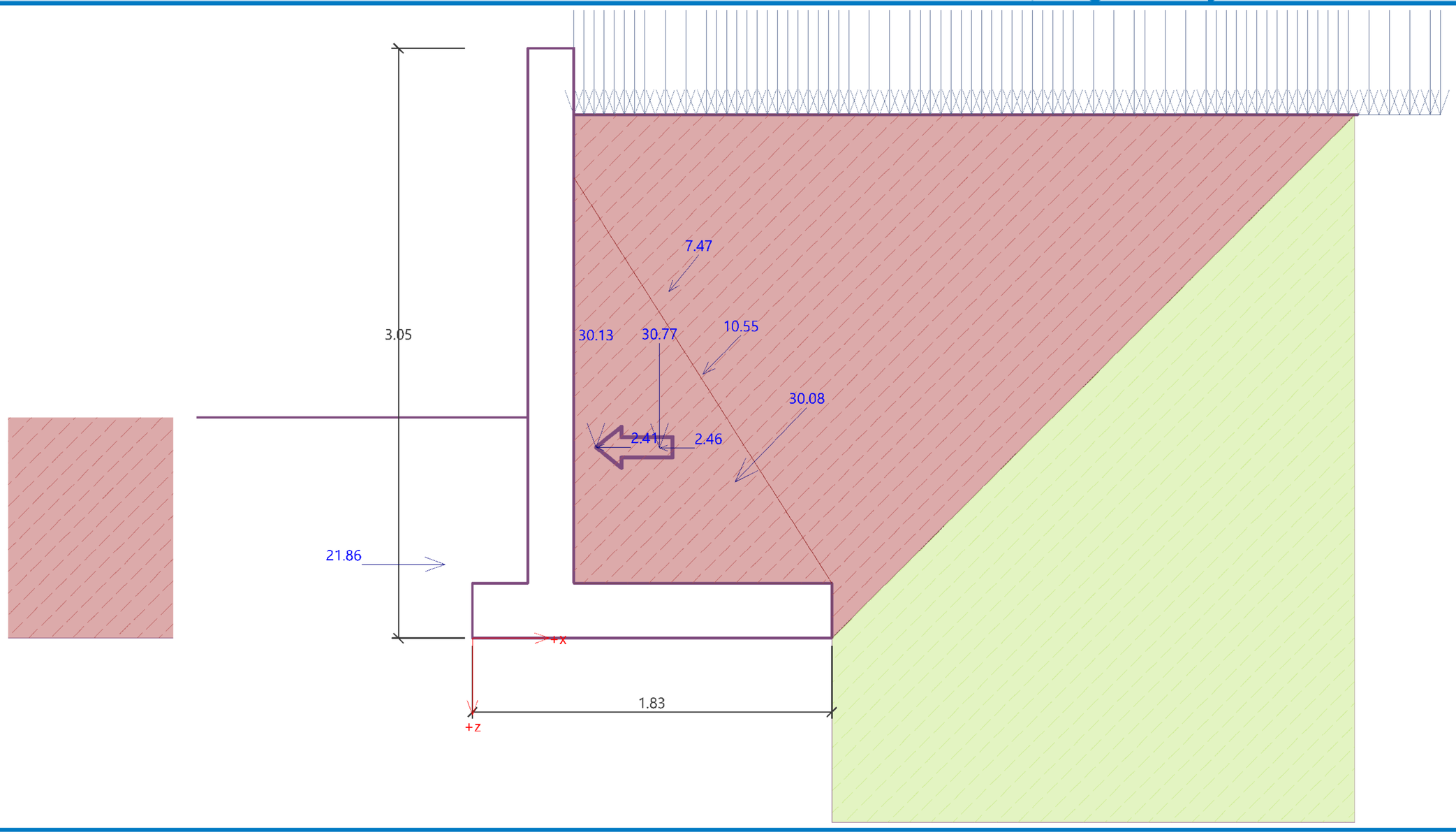

Bearing capacity of foundation soil (Stage of construction 2)

Design load acting at the center of footing bottom

No.	Moment [kNm/m]	Norm. force [kN/m]	Shear Force [kN/m]	Eccentricity [–]	Stress [kPa]
1	28.97	95.91	16.00	0.155	71.26

Service load acting at the center of footing bottom

No.	Moment [kNm/m]	Norm. force [kN/m]	Shear Force [kN/m]
1	28.97	95.91	16.00

Verification of foundation soil

Stress in the footing bottom : rectangle

Eccentricity verification

Max. eccentricity of normal force e = 0.155

Maximum allowable eccentricity e_{alw} = 0.333

Eccentricity of the normal force is SATISFACTORY

Verification of bearing capacity

Max. stress at footing bottom σ = 71.26 kPa

[GEO5 - Cantilever Wall | version 5.2021.68.0 | hardware key 11510 / 1 | Qengineering | Copyright © 2022 Fine spol. s r.o. All Rights Reserved | www.finesoftware.eu]
[Gross Energy Group | +995 577 545 777| d.tkebuchava@gegroup.org| http://www.gegroup.org]

Bearing capacity of foundation soil R_d = 250.00 kPa

Safety factor = 3.51 > 1.00

Bearing capacity of foundation soil is SATISFACTORY

Overall verification - bearing capacity of found. soil is SATISFACTORY

Dimensioning No. 1 (Stage of construction 2)

Wall stem check - front reinf.

Forces acting on construction

Name	F_{hor} [kN/m]	App.Pt. z [m]	F_{vert} [kN/m]	App.Pt. x [m]	Design coefficient
Weight - wall	0.00	-1.45	16.67	0.12	1.000
Earthq.- constr.	1.33	-1.45	0.00	0.12	1.000
FF resistance	-12.28	-0.30	0.00	0.00	1.000
Pressure at rest	37.21	-0.85	0.00	0.25	1.000
Earthquake - pressure at rest	10.31	-1.27	0.00	0.25	1.000
Surch.1 - surface	14.66	-1.27	0.00	0.25	1.000

Wall stem check - front reinf.

Front reinforcement is not required.

Wall stem check - back reinf.

Forces acting on construction

Name	F_{hor} [kN/m]	App.Pt. z [m]	F_{vert} [kN/m]	App.Pt. x [m]	Design coefficient
Weight - wall	0.00	-1.45	16.67	0.12	1.000
Earthq.- constr.	1.33	-1.45	0.00	0.12	1.000
FF resistance	-12.28	-0.30	0.00	0.00	1.000
Pressure at rest	37.21	-0.85	0.00	0.25	1.000
Earthquake - pressure at rest	10.31	-1.27	0.00	0.25	1.000
Surch.1 - surface	14.66	-1.27	0.00	0.25	1.000

Wall stem check - back reinf.

Wall check at the construction joint 2.90 m from the wall crest
Reinforcement and dimensions of the cross-section
5 prof. 14.0 mm, cover 50.0 mm

Inputted reinforcement area		=	769.7	mm^2				
Required reinforcement area		=	779.0	mm^2				
Cross-section width		=	1.00	m				
Cross-section height		=	0.25	m				
Reinforcement ratio	μ_s	=	0.40	%	>	0.10	%	= $\mu_{s,min}$
Position of neutral axis	x	=	0.04	m	<	0.10	m	= ξ_R
Ultimate shear force	V_{ult}	=	506.63	kN	>	51.23	kN	= Q
Ultimate moment	M_{ult}	=	66.00	kNm	>	61.44	kNm	= M

Cross-section is SATISFACTORY.

Wall jump check

Forces acting on construction

Name	F_{hor} [kN/m]	App.Pt. z [m]	F_{vert} [kN/m]	App.Pt. x [m]	Design coefficient
Weight - wall	0.00	-1.04	30.13	0.67	1.000
Earthq.- constr.	2.41	-1.04	0.00	0.67	1.000

[GEO5 - Cantilever Wall | version 5.2021.68.0 | hardware key 11510 / 1 | Qengineering | Copyright © 2022 Fine spol. s r.o. All Rights Reserved | www.finesoftware.eu]
[Gross Energy Group | +995 577 545 777| d.tkebuchava@gegroup.org| http://www.gegroup.org]

Name	F_{hor} [kN/m]	App.Pt. z [m]	F_{vert} [kN/m]	App.Pt. x [m]	Design coefficient
FF resistance	-21.86	-0.40	0.03	-0.15	1.000
Weight - earth wedge	0.00	-1.03	30.77	1.02	1.000
Earthquake - soil wedge	2.46	-1.03	0.00	1.02	1.000
Active pressure	20.85	-0.85	21.68	1.43	1.000
Earthq.- act.pressure	4.74	-1.88	5.77	1.07	1.000
Surch.1 - surface	7.40	-1.43	7.52	1.25	1.000

Wall jump check

Reinforcement and dimensions of the cross-section
5 prof. 12.0 mm, cover 50.0 mm

Inputted reinforcement area		=	565.5	mm^2				
Required reinforcement area		=	244.0	mm^2				
Cross-section width		=	1.00	m				
Cross-section height		=	0.30	m				
Reinforcement ratio	μ_s	=	0.23	%	>	0.10	%	= $\mu_{s,min}$
Position of neutral axis	x	=	0.02	m	<	0.12	m	= ξ_R
Ultimate shear force	V_{ult}	=	640.50	kN	>	24.29	kN	= Q
Ultimate moment	M_{ult}	=	57.93	kNm	>	9.47	kNm	= M

Cross-section is SATISFACTORY.

Wall heel check

Forces acting on construction

Name	F_{hor} [kN/m]	App.Pt. z [m]	F_{vert} [kN/m]	App.Pt. x [m]	Design coefficient
Weight - wall	0.00	-0.15	9.66	1.25	1.000
Weight - earth wedge	0.00	-1.03	30.77	1.02	1.000
Active pressure	20.85	-0.85	21.68	1.43	1.000
Surch.1 - surface	7.40	-1.43	7.52	1.25	1.000
Contact stress	0.00	0.00	-50.81	1.04	1.000

Wall heel check

Reinforcement and dimensions of the cross-section
5 prof. 14.0 mm, cover 50.0 mm

Inputted reinforcement area		=	769.7	mm^2				
Required reinforcement area		=	507.6	mm^2				
Cross-section width		=	1.00	m				
Cross-section height		=	0.30	m				
Reinforcement ratio	μ_s	=	0.32	%	>	0.10	%	= $\mu_{s,min}$
Position of neutral axis	x	=	0.02	m	<	0.12	m	= ξ_R
Ultimate shear force	V_{ult}	=	637.87	kN	>	18.83	kN	= Q
Ultimate moment	M_{ult}	=	77.49	kNm	>	51.97	kNm	= M

Cross-section is SATISFACTORY.

[GEO5 - Cantilever Wall | version 5.2021.68.0 | hardware key 11510 / 1 | Qengineering | Copyright © 2022 Fine spol. s r.o. All Rights Reserved | www.finesoftware.eu]
[Gross Energy Group | +995 577 545 777| d.tkebuchava@gegroup.org| http://www.gegroup.org]

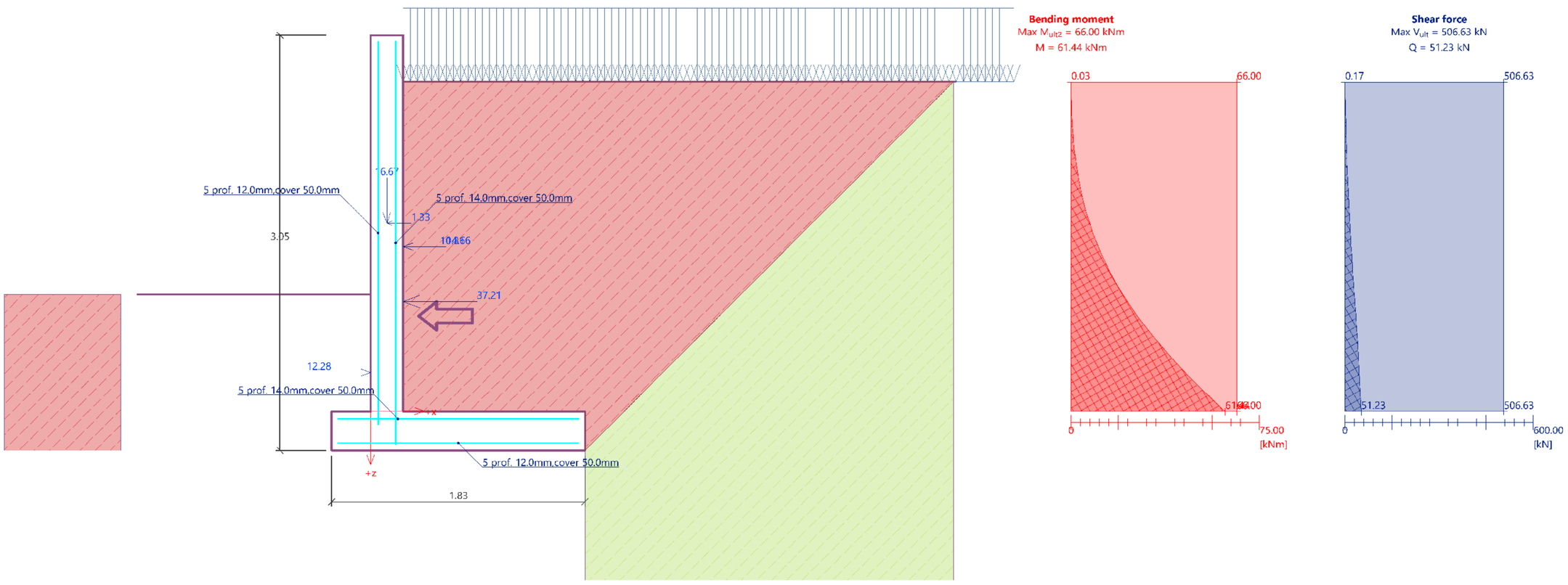

Slope stability analysis

Input data

Project

Settings

Russia

Materials and standards

SNiP - input coefficients according to SNIP standards

Coefficients according to SNiP			
Combination coefficient :	γ_k =	1.00	[–]
Coefficient of action conditions :	γ_c =	0.90	[–]
Coefficient of importance of structure :	γ_n =	1.10	[–]

Stability analysis

Earthquake analysis : Standard
Verification methodology : Safety factors (ASD)

Safety factors			
Seismic design situation			
Safety factor :	SF_s =	1.00	[–]

[GEO5 - Cantilever Wall | version 5.2021.68.0 | hardware key 11510 / 1 | Qengineering | Copyright © 2022 Fine spol. s r.o. All Rights Reserved | www.finesoftware.eu]
[Gross Energy Group | +995 577 545 777| d.tkebuchava@gegroup.org| http://www.gegroup.org]

Interface

No.	Interface location	Coordinates of interface points [m]					
		x	z	x	z	x	z
1	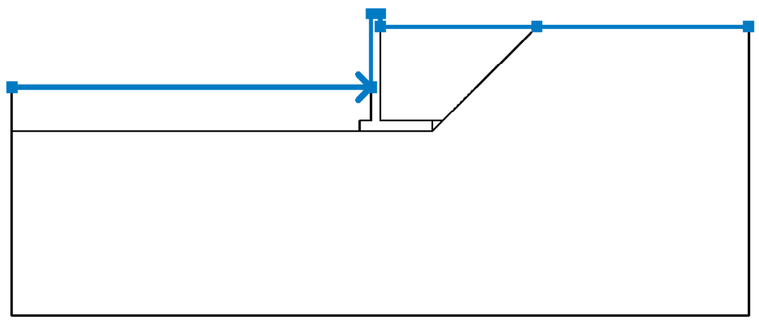	-10.00	-1.64	-0.25	-1.64	-0.25	0.36
		0.00	0.36	0.00	0.00	4.24	0.00
		10.00	0.00				
2	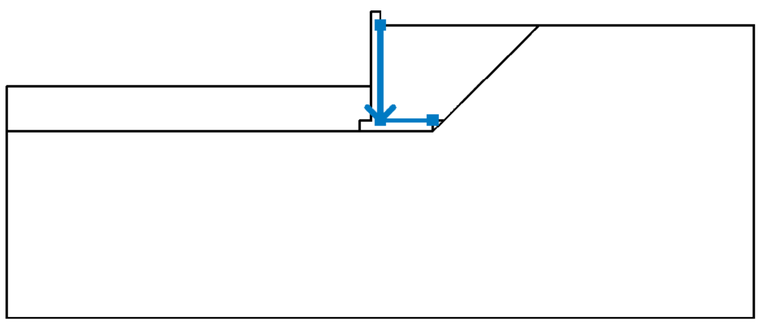	0.00	0.00	0.00	-2.54	1.40	-2.54
3	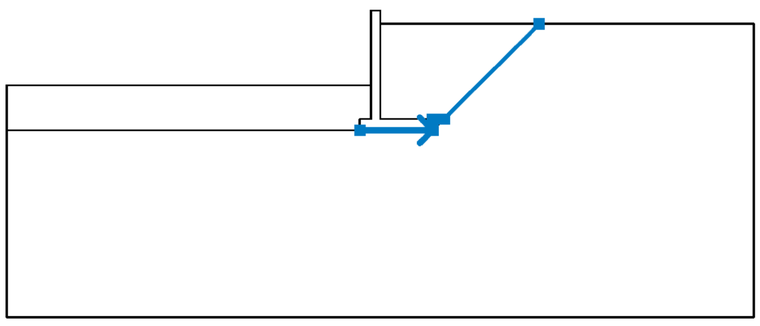	-0.55	-2.84	1.40	-2.84	1.40	-2.54
		1.70	-2.54	4.24	0.00		
4	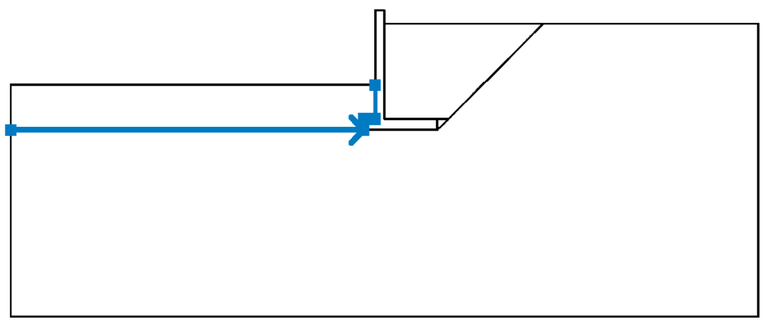	-10.00	-2.84	-0.55	-2.84	-0.55	-2.54
		-0.25	-2.54	-0.25	-1.64		
5	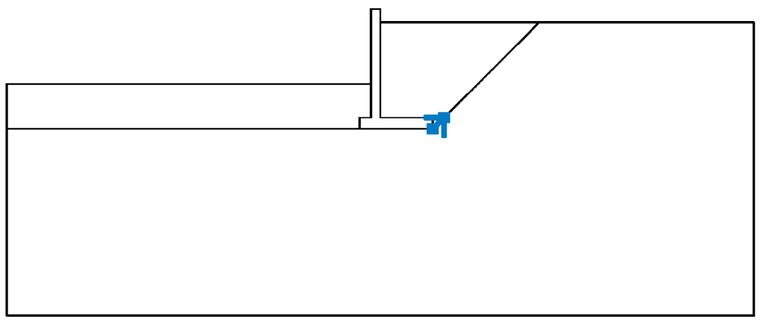	1.40	-2.84	1.70	-2.54		

Soil parameters - effective stress state

No.	Name	Pattern	φ_{ef} [°]	c_{ef} [kPa]	γ [kN/m^3]
1	nayari		25.00	0.00	20.00
2	sge-1		21.00	0.23	18.50

[GEO5 - Cantilever Wall | version 5.2021.68.0 | hardware key 11510 / 1 | Qengineering | Copyright © 2022 Fine spol. s r.o. All Rights Reserved | www.finesoftware.eu]
[Gross Energy Group | +995 577 545 777| d.tkebuchava@gegroup.org| http://www.gegroup.org]

Soil parameters - uplift

No.	Name	Pattern	γ_{sat} [kN/m^3]	γ_s [kN/m^3]	n [–]
1	nayari		20.00		
2	sge-1		18.50		

Soil parameters

nayari

Unit weight : $\gamma = 20.00$ kN/m^3
Stress-state : effective
Angle of internal friction : $\varphi_{ef} = 25.00$ °
Cohesion of soil : $c_{ef} = 0.00$ kPa
Saturated unit weight : $\gamma_{sat} = 20.00$ kN/m^3

sge-1

Unit weight : $\gamma = 18.50$ kN/m^3
Stress-state : effective
Angle of internal friction : $\varphi_{ef} = 21.00$ °
Cohesion of soil : $c_{ef} = 0.23$ kPa
Saturated unit weight : $\gamma_{sat} = 18.50$ kN/m^3

Rigid Bodies

No.	Name	Sample	γ [kN/m^3]
1	Material of structure		23.00

Assigning and surfaces

No.	Surface position	Coordinates of surface points [m]				Assigned soil
		x	z	x	z	
1	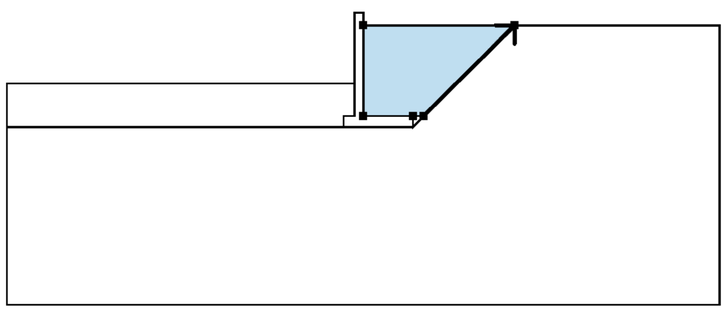	1.70	-2.54	4.24	0.00	nayari
		0.00	0.00	0.00	-2.54	
		1.40	-2.54			
2	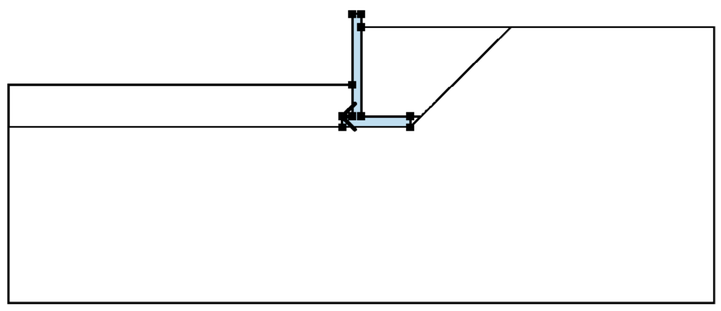	-0.25	-2.54	-0.55	-2.54	Material of structure
		-0.55	-2.84	1.40	-2.84	
		1.40	-2.54	0.00	-2.54	
		0.00	0.00	0.00	0.36	
		-0.25	0.36	-0.25	-1.64	

[GEO5 - Cantilever Wall | version 5.2021.68.0 | hardware key 11510 / 1 | Qengineering | Copyright © 2022 Fine spol. s r.o. All Rights Reserved | www.finesoftware.eu]
[Gross Energy Group | +995 577 545 777| d.tkebuchava@gegroup.org| http://www.gegroup.org]

No.	Surface position	Coordinates of surface points [m] x	z	x	z	Assigned soil
3	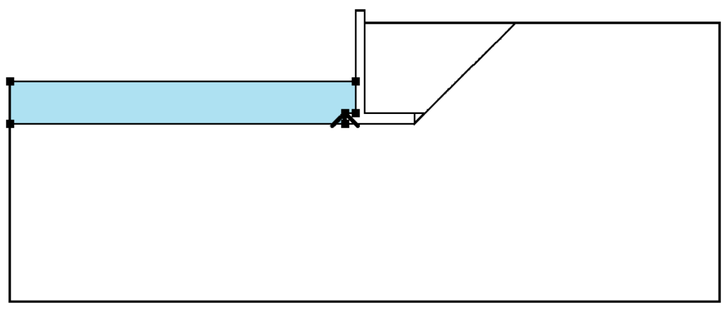	-0.55	-2.84	-0.55	-2.54	nayari
		-0.25	-2.54	-0.25	-1.64	
		-10.00	-1.64	-10.00	-2.84	
4	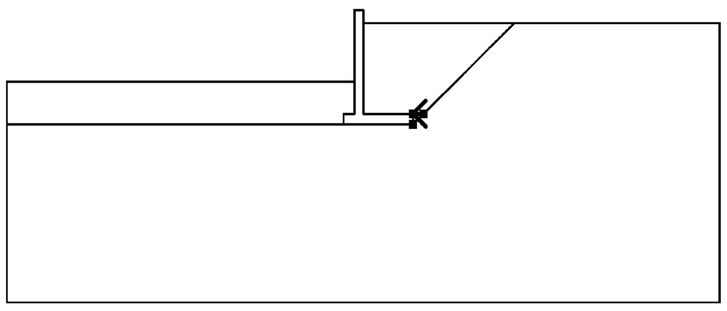	1.70	-2.54	1.40	-2.54	nayari
		1.40	-2.84			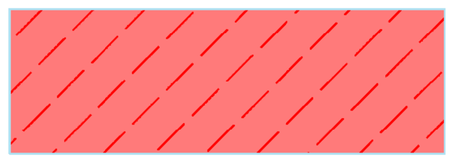
5	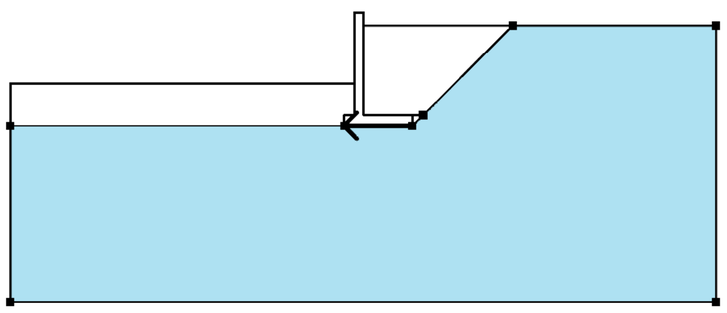	1.40	-2.84	-0.55	-2.84	sge-1
		-10.00	-2.84	-10.00	-7.84	
		10.00	-7.84	10.00	0.00	
		4.24	0.00	1.70	-2.54	

Surcharge

No.	Type	Type of action	Location z [m]	Origin x [m]	Length l [m]	Width b [m]	Slope α [°]	Magnitude q, q_1, f, F, x	q_2, z	unit
1	strip	permanent	on terrain	x = 0.00	l = 10.00		0.00	10.00		kN/m^2

Water

Water type : No water

Tensile crack

Tensile crack not input.

Earthquake

Horizontal seismic coefficient : K_h = 0.0800
Vertical seismic coefficient : K_v = 0.0000

Settings of the stage of construction

Design situation : seismic

Results (Stage of construction 1)

Analysis 1

Circular slip surface

Slip surface parameters							
Center :	x =	-0.72	[m]	Angles :	α_1 =	-44.62	[°]
	z =	2.36	[m]		α_2 =	65.17	[°]
Radius :	R =	5.62	[m]				
Analysis of the slip surface without optimization.							

[GEO5 - Cantilever Wall | version 5.2021.68.0 | hardware key 11510 / 1 | Qengineering | Copyright © 2022 Fine spol. s r.o. All Rights Reserved | www.finesoftware.eu]
[Gross Energy Group | +995 577 545 777| d.tkebuchava@gegroup.org| http://www.gegroup.org]

Slope stability verification (all methods)

Bishop :	FS = 1.46 > 1.00	**ACCEPTABLE**
Fellenius / Petterson :	FS = 1.21 > 1.00	**ACCEPTABLE**
Spencer :	FS = 1.48 > 1.00	**ACCEPTABLE**
Janbu :	FS = 1.47 > 1.00	**ACCEPTABLE**
Morgenstern-Price :	FS = 1.47 > 1.00	**ACCEPTABLE**
Shachunyanc :	FS = 1.23 > 1.00	**ACCEPTABLE**

Name : Analysis | **Stage - analysis : 1 - 1**

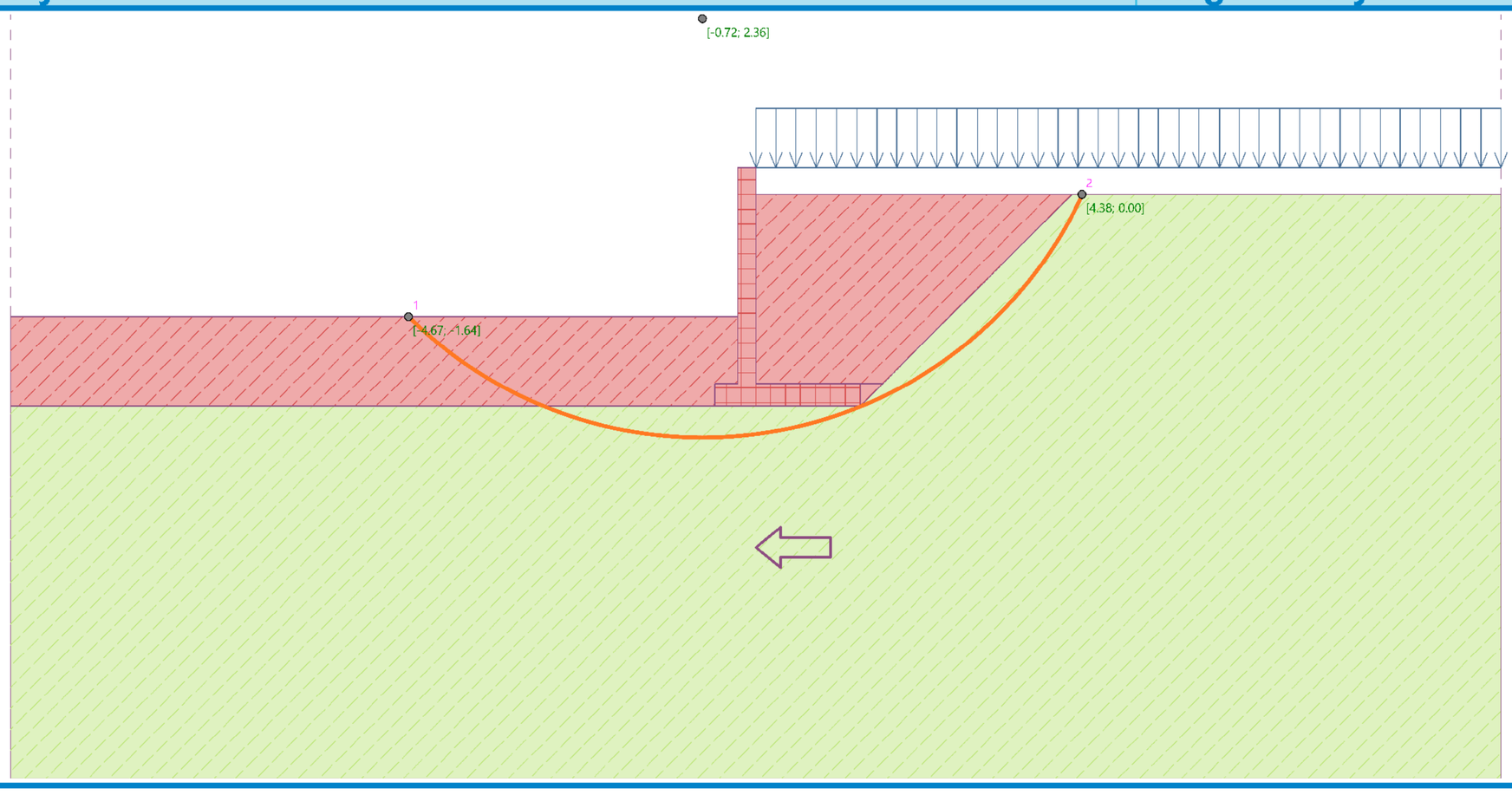

[GEO5 - Cantilever Wall | version 5.2021.68.0 | hardware key 11510 / 1 | Qengineering | Copyright © 2022 Fine spol. s r.o. All Rights Reserved | www.finesoftware.eu]
[Gross Energy Group | +995 577 545 777| d.tkebuchava@gegroup.org| http://www.gegroup.org]

Cantilever wall analysis

Input data

Project

Date : 07.12.2022

Settings

Russia

Materials and standards

Concrete structures : SNiP 52-01-2003
SNiP - input coefficients according to SNIP standards

Coefficients according to SNiP			
Combination coefficient :	γ_k =	1.00	[–]
Coefficient of action conditions :	γ_c =	0.90	[–]
Coefficient of importance of structure :	γ_n =	1.10	[–]

Wall analysis

Active earth pressure calculation : SP 22.13330.2016
Passive earth pressure calculation : SP 22.13330.2016
Earthquake analysis : Mononobe-Okabe
Shape of earth wedge : Calculate as skew
Base key : The base key is considered as inclined footing bottom
Allowable eccentricity : 0.333
Verification methodology : Safety factors (ASD)

Safety factors			
Permanent design situation			
Safety factor for overturning :	SF_o =	1.50	[–]
Safety factor for sliding resistance :	SF_s =	1.50	[–]
Safety factor for bearing capacity :	SF_b =	1.50	[–]

Safety factors			
Seismic design situation			
Safety factor for overturning :	SF_o =	1.00	[–]
Safety factor for sliding resistance :	SF_s =	1.00	[–]
Safety factor for bearing capacity :	SF_b =	1.00	[–]

Material of structure

Unit weight γ = 23.00 kN/m^3
Analysis of concrete structures carried out according to the standard SNiP 52-01-2003.

Concrete: B25
Compressive strength R_b = 14.50 MPa
Tensile strength R_{bt} = 1.05 MPa

Longitudinal steel: A500
Tensile strength R_s = 435.00 MPa

Geometry of structure

No.	Coordinate X [m]	Depth Z [m]
1	0.00	-0.36
2	0.00	2.30

[GEO5 - Cantilever Wall | version 5.2021.68.0 | hardware key 11510 / 1 | Qengineering | Copyright © 2022 Fine spol. s r.o. All Rights Reserved | www.finesoftware.eu]
[Gross Energy Group | +995 577 545 777| d.tkebuchava@gegroup.org| http://www.gegroup.org]

No.	Coordinate X [m]	Depth Z [m]
3	1.40	2.30
4	1.40	2.60
5	-0.80	2.60
6	-0.80	2.30
7	-0.30	2.30
8	-0.30	-0.36

The origin [0,0] is located at the most upper right point of the wall.
Wall section area = 1.46 m^2.

Basic soil parameters

No.	Name	Pattern	φ_{ef} [°]	c_{ef} [kPa]	γ [kN/m^3]	γ_{su} [kN/m^3]	δ [°]
1	nayari		25.00	0.00	20.00	10.00	0.00
2	sge-2		34.00	0.19	20.00	10.00	0.00

Soil parameters to compute pressure at rest

No.	Name	Pattern	Type calculation	φ_{ef} [°]	v [–]	OCR [–]	K_r [–]
1	nayari		cohesionless	25.00	-	-	-
2	sge-2		cohesive	-	0.35	-	-

Soil parameters

nayari

Unit weight : $\gamma = 20.00$ kN/m^3
Stress-state : effective
Angle of internal friction : $\varphi_{ef} = 25.00$ °
Cohesion of soil : $c_{ef} = 0.00$ kPa
Angle of friction struc.-soil : $\delta = 0.00$ °
Soil : cohesionless
Saturated unit weight : $\gamma_{sat} = 20.00$ kN/m^3

sge-2

Unit weight : $\gamma = 20.00$ kN/m^3
Stress-state : effective
Angle of internal friction : $\varphi_{ef} = 34.00$ °
Cohesion of soil : $c_{ef} = 0.19$ kPa
Angle of friction struc.-soil : $\delta = 0.00$ °
Soil : cohesive
Poisson's ratio : $v = 0.35$
Saturated unit weight : $\gamma_{sat} = 20.00$ kN/m^3

Backfill

Assigned soil : nayari
Slope = 45.00 °

[GEO5 - Cantilever Wall | version 5.2021.68.0 | hardware key 11510 / 1 | Qengineering | Copyright © 2022 Fine spol. s r.o. All Rights Reserved | www.finesoftware.eu]
[Gross Energy Group | +995 577 545 777| d.tkebuchava@gegroup.org| http://www.gegroup.org]

Geological profile and assigned soils

No.	Thickness of layer t [m]	Depth z [m]	Assigned soil	Pattern
1	-	0.00 .. ∞	sge-2	

Foundation

Type of foundation : soil from geological profile

Terrain profile

Terrain behind the structure is flat.
Depth of terrain below the top of wall h = 0.36 m.

Water influence

Ground water table is located below the structure.

Input surface surcharges

No.	Surcharge new	Surcharge change	Action	Mag.1 [kN/m^2]	Mag.2 [kN/m^2]	Ord.x x [m]	Length l [m]	Depth z [m]
1	Yes		permanent	10.00				on terrain

Resistance on front face of the structure

Resistance on front face of the structure: 1/2 pass., 1/2 at rest
Soil on front face of the structure - nayari
Angle of friction struc.-soil $\delta = 0.00$ °
Soil thickness in front of structure $h = 1.40$ m

Terrain in front of structure is flat.

Settings of the stage of construction

Design situation : permanent
The wall is free to move. Active earth pressure is therefore assumed.

Verification No. 1 (Stage of construction 1)

Forces acting on construction

Name	F_{hor} [kN/m]	App.Pt. z [m]	F_{vert} [kN/m]	App.Pt. x [m]	Design coefficient
Weight - wall	0.00	-0.96	33.53	0.85	1.000
FF resistance	-29.76	-0.47	0.04	-0.25	1.000
Weight - earth wedge	0.00	-1.03	30.77	1.27	1.000
Active pressure	17.51	-0.76	18.07	1.71	1.000
Surch.1 - surface	6.42	-1.24	7.52	1.50	1.000

Verification of complete wall

Check for overturning stability
Resisting moment $M_{res} = 89.87$ kNm/m
Overturning moment $M_{ovr} = 7.28$ kNm/m

Safety factor = 12.34 > 1.50
Wall for overturning is SATISFACTORY

Check for slip
Resisting horizontal force $H_{res} = 49.98$ kN/m
Active horizontal force $H_{act} = -5.83$ kN/m

Safety factor = 1000.00 > 1.50
Wall for slip is SATISFACTORY

Overall check - WALL is SATISFACTORY

[GEO5 - Cantilever Wall | version 5.2021.68.0 | hardware key 11510 / 1 | Qengineering | Copyright © 2022 Fine spol. s r.o. All Rights Reserved | www.finesoftware.eu]
[Gross Energy Group | +995 577 545 777| d.tkebuchava@gegroup.org| http://www.gegroup.org]

Bearing capacity of foundation soil (Stage of construction 1)

Design load acting at the center of footing bottom

No.	Moment [kNm/m]	Norm. force [kN/m]	Shear Force [kN/m]	Eccentricity [–]	Stress [kPa]
1	-3.63	89.94	-5.83	0.000	40.88

Service load acting at the center of footing bottom

No.	Moment [kNm/m]	Norm. force [kN/m]	Shear Force [kN/m]
1	-3.63	89.94	-5.83

Verification of foundation soil

Stress in the footing bottom : rectangle

Eccentricity verification

Max. eccentricity of normal force $e = 0.000$
Maximum allowable eccentricity $e_{alw} = 0.333$

Eccentricity of the normal force is SATISFACTORY

Verification of bearing capacity

Max. stress at footing bottom $\sigma = 40.88$ kPa
Bearing capacity of foundation soil $R_d = 500.00$ kPa

Safety factor = 12.23 > 1.50
Bearing capacity of foundation soil is SATISFACTORY

Overall verification - bearing capacity of found. soil is SATISFACTORY

Dimensioning No. 1 (Stage of construction 1)

Wall stem check - front reinf.

Forces acting on construction

Name	F_{hor} [kN/m]	App.Pt. z [m]	F_{vert} [kN/m]	App.Pt. x [m]	Design coefficient
Weight - wall	0.00	-1.33	18.35	0.15	1.000
FF resistance	-18.36	-0.37	0.00	0.00	1.000
Pressure at rest	30.51	-0.77	0.00	0.30	1.000
Surch.1 - surface	13.27	-1.15	0.00	0.30	1.000

Wall stem check - front reinf.

Front reinforcement is not required.

Wall stem check - back reinf.

Forces acting on construction

Name	F_{hor} [kN/m]	App.Pt. z [m]	F_{vert} [kN/m]	App.Pt. x [m]	Design coefficient
Weight - wall	0.00	-1.33	18.35	0.15	1.000
FF resistance	-18.36	-0.37	0.00	0.00	1.000
Pressure at rest	30.51	-0.77	0.00	0.30	1.000
Surch.1 - surface	13.27	-1.15	0.00	0.30	1.000

Wall stem check - back reinf.

Wall check at the construction joint 2.66 m from the wall crest
Reinforcement and dimensions of the cross-section
5 prof. 14.0 mm, cover 50.0 mm
Inputted reinforcement area = 769.7 mm^2
Required reinforcement area = 307.7 mm^2

[GEO5 - Cantilever Wall | version 5.2021.68.0 | hardware key 11510 / 1 | Qengineering | Copyright © 2022 Fine spol. s r.o. All Rights Reserved | www.finesoftware.eu]
[Gross Energy Group | +995 577 545 777| d.tkebuchava@gegroup.org| http://www.gegroup.org]

Cross-section width = 1.00 m
Cross-section height = 0.30 m

Reinforcement ratio	μ_s	=	0.32	%	>	0.10	%	=	$\mu_{s,min}$
Position of neutral axis	x	=	0.04	m	<	0.12	m	=	ξ_R
Ultimate shear force	V_{ult}	=	637.88	kN	>	25.42	kN	=	Q
Ultimate moment	M_{ult}	=	82.74	kNm	>	31.91	kNm	=	M

Cross-section is SATISFACTORY.

Wall stem check - back reinf. - Q

Wall check at the construction joint 2.61 m from the wall crest
Reinforcement and dimensions of the cross-section
5 prof. 14.0 mm, cover 50.0 mm
Inputted reinforcement area = 769.7 mm^2
Required reinforcement area = 307.7 mm^2
Cross-section width = 1.00 m
Cross-section height = 0.30 m

Ultimate shear force V_{ult} = 637.88 kN > 25.46 kN = Q

Cross-section is SATISFACTORY.

Wall jump check

Forces acting on construction

Name	F_{hor} [kN/m]	App.Pt. z [m]	F_{vert} [kN/m]	App.Pt. x [m]	Design coefficient
Weight - wall	0.00	-0.96	33.53	0.85	1.000
FF resistance	-29.76	-0.47	0.04	-0.25	1.000
Weight - earth wedge	0.00	-1.03	30.77	1.27	1.000
Active pressure	17.51	-0.76	18.07	1.71	1.000
Surch.1 - surface	6.42	-1.24	7.52	1.50	1.000

Wall jump check

Reinforcement and dimensions of the cross-section
5 prof. 12.0 mm, cover 50.0 mm
Inputted reinforcement area = 565.5 mm^2
Required reinforcement area = 286.1 mm^2
Cross-section width = 1.00 m
Cross-section height = 0.30 m

Reinforcement ratio	μ_s	=	0.23	%	>	0.10	%	=	$\mu_{s,min}$
Position of neutral axis	x	=	0.02	m	<	0.12	m	=	ξ_R
Ultimate shear force	V_{ult}	=	640.50	kN	>	16.99	kN	=	Q
Ultimate moment	M_{ult}	=	57.93	kNm	>	29.84	kNm	=	M

Cross-section is SATISFACTORY.

Wall heel check

Forces acting on construction

Name	F_{hor} [kN/m]	App.Pt. z [m]	F_{vert} [kN/m]	App.Pt. x [m]	Design coefficient
Weight - wall	0.00	-0.15	9.66	1.50	1.000
Weight - earth wedge	0.00	-1.03	30.77	1.27	1.000
Active pressure	17.51	-0.76	18.07	1.71	1.000
Surch.1 - surface	6.42	-1.24	7.52	1.50	1.000
Contact stress	0.00	0.00	-59.52	1.52	1.000

[GEO5 - Cantilever Wall | version 5.2021.68.0 | hardware key 11510 / 1 | Qengineering | Copyright © 2022 Fine spol. s r.o. All Rights Reserved | www.finesoftware.eu]
[Gross Energy Group | +995 577 545 777| d.tkebuchava@gegroup.org| http://www.gegroup.org]

Wall heel check

Reinforcement and dimensions of the cross-section
5 prof. 14.0 mm, cover 50.0 mm
Inputted reinforcement area = 769.7 mm^2
Required reinforcement area = 243.0 mm^2
Cross-section width = 1.00 m
Cross-section height = 0.30 m

Reinforcement ratio	μ_s	=	0.32	%	>	0.10	%	= $\mu_{s,min}$
Position of neutral axis	x	=	0.02	m	<	0.12	m	= ξ_R
Ultimate shear force	V_{ult}	=	637.87	kN	>	6.50	kN	= Q
Ultimate moment	M_{ult}	=	77.49	kNm	>	2.07	kNm	= M

Cross-section is SATISFACTORY.

Input data (Stage of construction 2)

Geological profile and assigned soils

No.	Thickness of layer t [m]	Depth z [m]	Assigned soil	Pattern
1	-	0.00 .. ∞	sge-2	

Foundation

Type of foundation : soil from geological profile

Terrain profile

Terrain behind the structure is flat.
Depth of terrain below the top of wall h = 0.36 m.

Water influence

Ground water table is located below the structure.

Input surface surcharges

No.	Surcharge new	Surcharge change	Action	Mag.1 [kN/m^2]	Mag.2 [kN/m^2]	Ord.x x [m]	Length l [m]	Depth z [m]
1	No	Yes	permanent	10.00				on terrain

Resistance on front face of the structure

Resistance on front face of the structure: 1/2 pass., 1/2 at rest
Soil on front face of the structure - nayari
Angle of friction struc.-soil δ = 0.00 °
Soil thickness in front of structure h = 1.40 m

Terrain in front of structure is flat.

Earthquake

Factor of horizontal acceleration K_h = 0.0800
Factor of vertical acceleration K_v = 0.0000

Water below the GWT is restricted.

Settings of the stage of construction

Design situation : seismic
The wall is free to move. Active earth pressure is therefore assumed.

Verification No. 1 (Stage of construction 2)

Forces acting on construction

Name	F_{hor} [kN/m]	App.Pt. z [m]	F_{vert} [kN/m]	App.Pt. x [m]	Design coefficient
Weight - wall	0.00	-0.96	33.53	0.85	1.000
Earthq.- constr.	2.68	-0.96	0.00	0.85	1.000

[GEO5 - Cantilever Wall | version 5.2021.68.0 | hardware key 11510 / 1 | Qengineering | Copyright © 2022 Fine spol. s r.o. All Rights Reserved | www.finesoftware.eu]
[Gross Energy Group | +995 577 545 777| d.tkebuchava@gegroup.org| http://www.gegroup.org]

Name	F_{hor} [kN/m]	App.Pt. z [m]	F_{vert} [kN/m]	App.Pt. x [m]	Design coefficient
FF resistance	-29.76	-0.47	0.04	-0.25	1.000
Weight - earth wedge	0.00	-1.03	30.77	1.27	1.000
Earthquake - soil wedge	2.46	-1.03	0.00	1.27	1.000
Active pressure	17.51	-0.76	18.07	1.71	1.000
Earthq.- act.pressure	4.02	-1.73	5.78	1.32	1.000
Surch.1 - surface	6.42	-1.24	7.52	1.50	1.000

Verification of complete wall

Check for overturning stability

Resisting moment M_{res} = 96.09 kNm/m
Overturning moment M_{ovr} = 19.35 kNm/m

Safety factor = 4.97 > 1.00
Wall for overturning is SATISFACTORY

Check for slip

Resisting horizontal force H_{res} = 53.14 kN/m
Active horizontal force H_{act} = 3.33 kN/m

Safety factor = 15.94 > 1.00
Wall for slip is SATISFACTORY

Overall check - WALL is SATISFACTORY

Name : Verification | **Stage - analysis : 2 - 1**

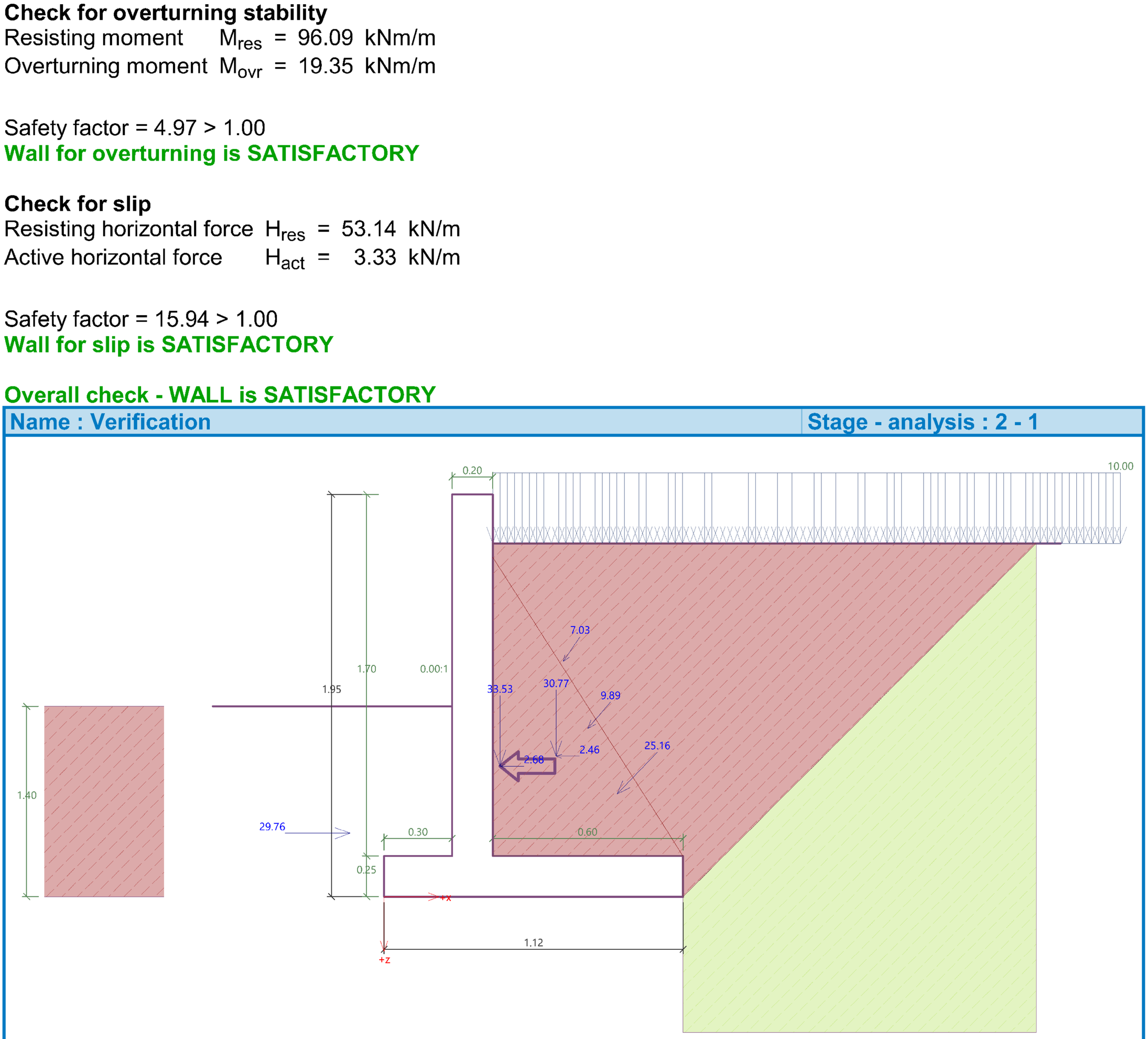

Bearing capacity of foundation soil (Stage of construction 2)

Design load acting at the center of footing bottom

[GEO5 - Cantilever Wall | version 5.2021.68.0 | hardware key 11510 / 1 | Qengineering | Copyright © 2022 Fine spol. s r.o. All Rights Reserved | www.finesoftware.eu]
[Gross Energy Group | +995 577 545 777| d.tkebuchava@gegroup.org| http://www.gegroup.org]

No.	Moment [kNm/m]	Norm. force [kN/m]	Shear Force [kN/m]	Eccentricity [–]	Stress [kPa]
1	7.19	95.71	3.33	0.034	46.69

Service load acting at the center of footing bottom

No.	Moment [kNm/m]	Norm. force [kN/m]	Shear Force [kN/m]
1	7.19	95.71	3.33

Verification of foundation soil

Stress in the footing bottom : rectangle

Eccentricity verification

Max. eccentricity of normal force $e = 0.034$
Maximum allowable eccentricity $e_{alw} = 0.333$

Eccentricity of the normal force is SATISFACTORY

Verification of bearing capacity

Max. stress at footing bottom $\sigma = 46.69$ kPa
Bearing capacity of foundation soil $R_d = 500.00$ kPa

Safety factor = 10.71 > 1.00
Bearing capacity of foundation soil is SATISFACTORY

Overall verification - bearing capacity of found. soil is SATISFACTORY

Dimensioning No. 1 (Stage of construction 2)

Wall stem check - front reinf.

Forces acting on construction

Name	F_{hor} [kN/m]	App.Pt. z [m]	F_{vert} [kN/m]	App.Pt. x [m]	Design coefficient
Weight - wall	0.00	-1.33	18.35	0.15	1.000
Earthq.- constr.	1.47	-1.33	0.00	0.15	1.000
FF resistance	-18.36	-0.37	0.00	0.00	1.000
Pressure at rest	30.51	-0.77	0.00	0.30	1.000
Earthquake - pressure at rest	8.45	-1.15	0.00	0.30	1.000
Surch.1 - surface	13.27	-1.15	0.00	0.30	1.000

Wall stem check - front reinf.

Front reinforcement is not required.

Wall stem check - back reinf.

Forces acting on construction

Name	F_{hor} [kN/m]	App.Pt. z [m]	F_{vert} [kN/m]	App.Pt. x [m]	Design coefficient
Weight - wall	0.00	-1.33	18.35	0.15	1.000
Earthq.- constr.	1.47	-1.33	0.00	0.15	1.000
FF resistance	-18.36	-0.37	0.00	0.00	1.000
Pressure at rest	30.51	-0.77	0.00	0.30	1.000
Earthquake - pressure at rest	8.45	-1.15	0.00	0.30	1.000
Surch.1 - surface	13.27	-1.15	0.00	0.30	1.000

Wall stem check - back reinf.

Wall check at the construction joint 2.66 m from the wall crest
Reinforcement and dimensions of the cross-section
5 prof. 14.0 mm, cover 50.0 mm

[GEO5 - Cantilever Wall | version 5.2021.68.0 | hardware key 11510 / 1 | Qengineering | Copyright © 2022 Fine spol. s r.o. All Rights Reserved | www.finesoftware.eu]
[Gross Energy Group | +995 577 545 777| d.tkebuchava@gegroup.org| http://www.gegroup.org]

Inputted reinforcement area		=	769.7	mm^2					
Required reinforcement area		=	423.3	mm^2					
Cross-section width		=	1.00	m					
Cross-section height		=	0.30	m					
Reinforcement ratio	μ_s	=	0.32	%	>	0.10	%	=	$\mu_{s,min}$
Position of neutral axis	x	=	0.04	m	<	0.12	m	=	ξ_R
Ultimate shear force	V_{ult}	=	637.88	kN	>	35.34	kN	=	Q
Ultimate moment	M_{ult}	=	82.74	kNm	>	43.58	kNm	=	M

Cross-section is SATISFACTORY.

Wall jump check

Forces acting on construction

Name	F_{hor} [kN/m]	App.Pt. z [m]	F_{vert} [kN/m]	App.Pt. x [m]	Design coefficient
Weight - wall	0.00	-0.96	33.53	0.85	1.000
Earthq.- constr.	2.68	-0.96	0.00	0.85	1.000
FF resistance	-29.76	-0.47	0.04	-0.25	1.000
Weight - earth wedge	0.00	-1.03	30.77	1.27	1.000
Earthquake - soil wedge	2.46	-1.03	0.00	1.27	1.000
Active pressure	17.51	-0.76	18.07	1.71	1.000
Earthq.- act.pressure	4.02	-1.73	5.78	1.32	1.000
Surch.1 - surface	6.42	-1.24	7.52	1.50	1.000

Wall jump check

Reinforcement and dimensions of the cross-section
5 prof. 12.0 mm, cover 50.0 mm

Inputted reinforcement area		=	565.5	mm^2					
Required reinforcement area		=	244.0	mm^2					
Cross-section width		=	1.00	m					
Cross-section height		=	0.30	m					
Reinforcement ratio	μ_s	=	0.23	%	>	0.10	%	=	$\mu_{s,min}$
Position of neutral axis	x	=	0.02	m	<	0.12	m	=	ξ_R
Ultimate shear force	V_{ult}	=	640.50	kN	>	21.75	kN	=	Q
Ultimate moment	M_{ult}	=	57.93	kNm	>	22.26	kNm	=	M

Cross-section is SATISFACTORY.

Wall heel check

Forces acting on construction

Name	F_{hor} [kN/m]	App.Pt. z [m]	F_{vert} [kN/m]	App.Pt. x [m]	Design coefficient
Weight - wall	0.00	-0.15	9.66	1.50	1.000
Weight - earth wedge	0.00	-1.03	30.77	1.27	1.000
Active pressure	17.51	-0.76	18.07	1.71	1.000
Surch.1 - surface	6.42	-1.24	7.52	1.50	1.000
Contact stress	0.00	0.00	-56.37	1.47	1.000

Wall heel check

Reinforcement and dimensions of the cross-section
5 prof. 14.0 mm, cover 50.0 mm

Inputted reinforcement area	=	769.7	mm^2	
Required reinforcement area	=	243.0	mm^2	
Cross-section width	=	1.00	m	

[GEO5 - Cantilever Wall | version 5.2021.68.0 | hardware key 11510 / 1 | Qengineering | Copyright © 2022 Fine spol. s r.o. All Rights Reserved | www.finesoftware.eu]
[Gross Energy Group | +995 577 545 777| d.tkebuchava@gegroup.org| http://www.gegroup.org]

Cross-section height		=	0.30	m					
Reinforcement ratio	μ_s	=	0.32	%	>	0.10	%	=	$\mu_{s,min}$
Position of neutral axis	x	=	0.02	m	<	0.12	m	=	ξ_R
Ultimate shear force	V_{ult}	=	637.87	kN	>	9.65	kN	=	Q
Ultimate moment	M_{ult}	=	77.49	kNm	>	21.32	kNm	=	M

Cross-section is SATISFACTORY.

Name : Dimensioning | Stage - analysis : 2 - 1

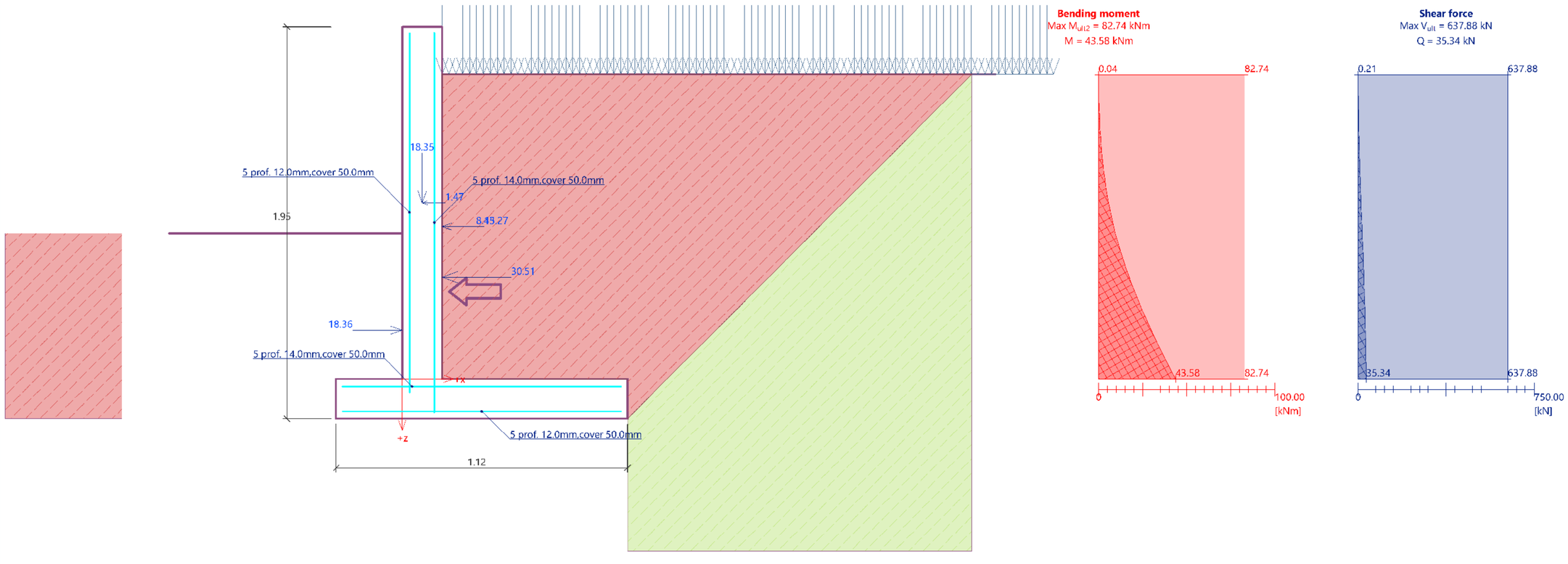

Slope stability analysis

Input data

Project

Settings

Russia

Materials and standards

SNiP - input coefficients according to SNIP standards

Coefficients according to SNiP			
Combination coefficient :	γ_k =	1.00	[–]
Coefficient of action conditions :	γ_c =	0.90	[–]
Coefficient of importance of structure :	γ_n =	1.10	[–]

Stability analysis

Earthquake analysis : Standard
Verification methodology : Safety factors (ASD)

Safety factors			
Seismic design situation			
Safety factor :	SF_s =	1.00	[–]

[GEO5 - Cantilever Wall | version 5.2021.68.0 | hardware key 11510 / 1 | Qengineering | Copyright © 2022 Fine spol. s r.o. All Rights Reserved | www.finesoftware.eu]
[Gross Energy Group | +995 577 545 777| d.tkebuchava@gegroup.org| http://www.gegroup.org]

Interface

No.	Interface location	Coordinates of interface points [m]					
		x	z	x	z	x	z
1	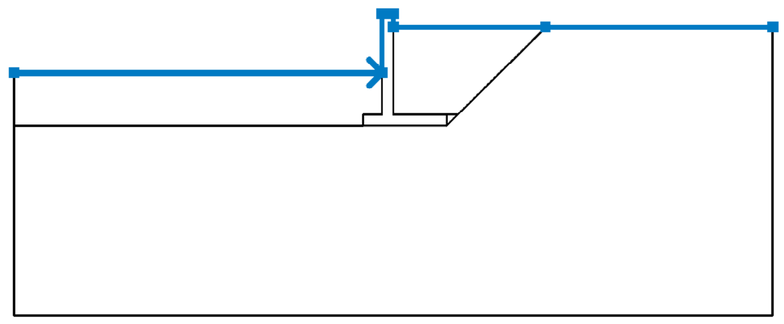	-10.00	-1.20	-0.30	-1.20	-0.30	0.36
		0.00	0.36	0.00	0.00	4.00	0.00
		10.00	0.00				
2	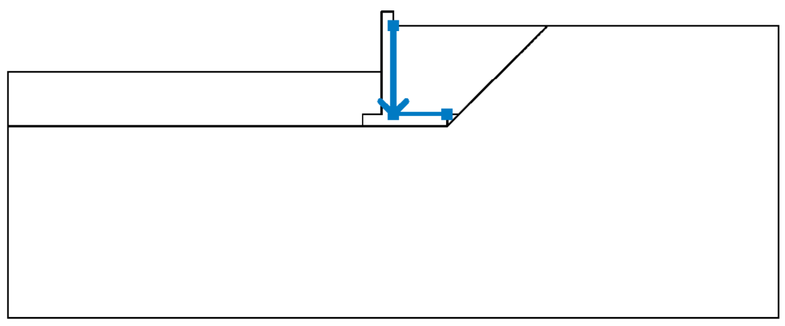	0.00	0.00	0.00	-2.30	1.40	-2.30
3	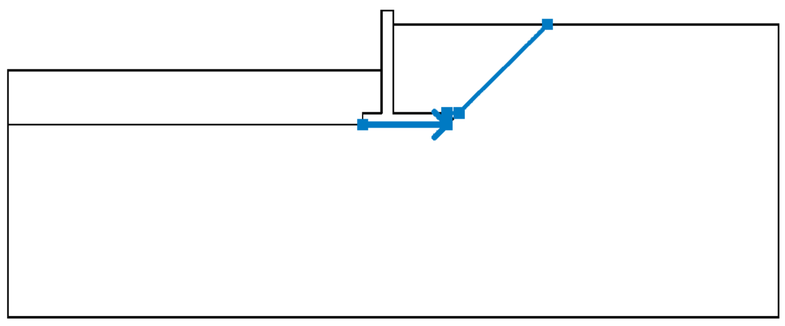	-0.80	-2.60	1.40	-2.60	1.40	-2.30
		1.70	-2.30	4.00	0.00		
4	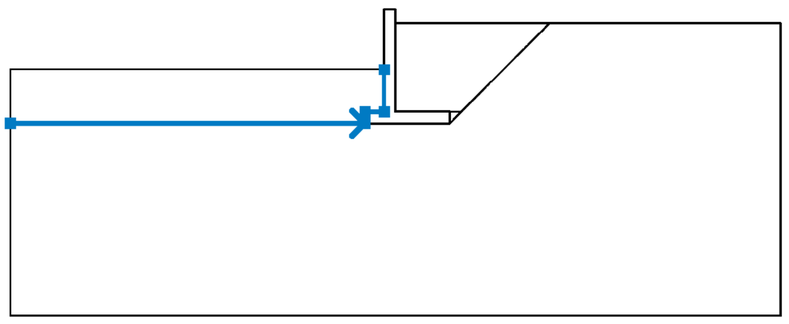	-10.00	-2.60	-0.80	-2.60	-0.80	-2.30
		-0.30	-2.30	-0.30	-1.20		
5	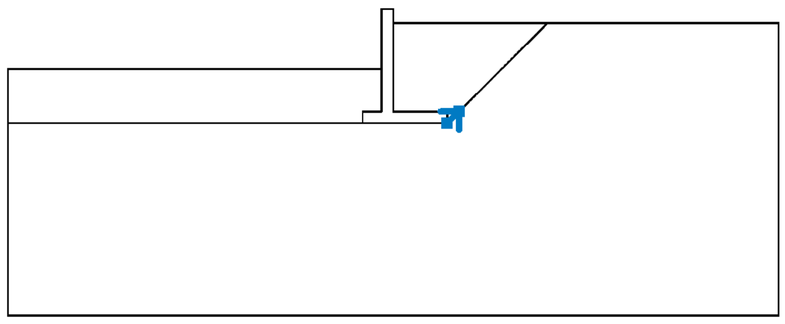	1.40	-2.60	1.70	-2.30		

Soil parameters - effective stress state

No.	Name	Pattern	φ_{ef} [°]	c_{ef} [kPa]	γ [kN/m^3]
1	nayari		25.00	0.00	20.00
2	sge-2		34.00	0.19	20.00

[GEO5 - Cantilever Wall | version 5.2021.68.0 | hardware key 11510 / 1 | Qengineering | Copyright © 2022 Fine spol. s r.o. All Rights Reserved | www.finesoftware.eu]
[Gross Energy Group | +995 577 545 777| d.tkebuchava@gegroup.org| http://www.gegroup.org]

Soil parameters - uplift

No.	Name	Pattern	γ_{sat} [kN/m^3]	γ_s [kN/m^3]	n [–]
1	nayari		20.00		
2	sge-2		20.00		

Soil parameters

nayari

Unit weight : $\gamma = 20.00$ kN/m^3
Stress-state : effective
Angle of internal friction : $\varphi_{ef} = 25.00$ °
Cohesion of soil : $c_{ef} = 0.00$ kPa
Saturated unit weight : $\gamma_{sat} = 20.00$ kN/m^3

sge-2

Unit weight : $\gamma = 20.00$ kN/m^3
Stress-state : effective
Angle of internal friction : $\varphi_{ef} = 34.00$ °
Cohesion of soil : $c_{ef} = 0.19$ kPa
Saturated unit weight : $\gamma_{sat} = 20.00$ kN/m^3

Rigid Bodies

No.	Name	Sample	γ [kN/m^3]
1	Material of structure		23.00

Assigning and surfaces

No.	Surface position	Coordinates of surface points [m]				Assigned soil
		x	z	x	z	
1	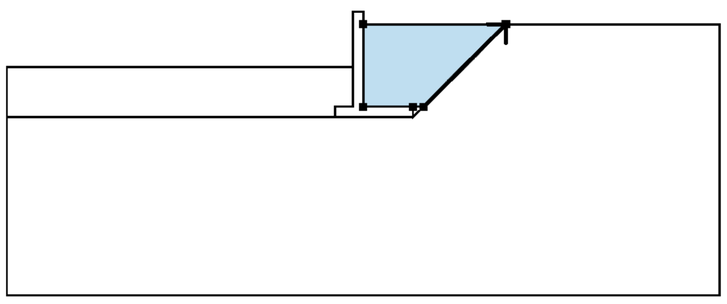	1.70	-2.30	4.00	0.00	nayari
		0.00	0.00	0.00	-2.30	
		1.40	-2.30			
2	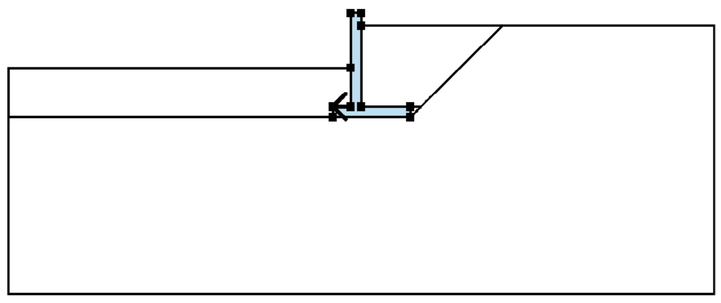	-0.30	-2.30	-0.80	-2.30	Material of structure
		-0.80	-2.60	1.40	-2.60	
		1.40	-2.30	0.00	-2.30	
		0.00	0.00	0.00	0.36	
		-0.30	0.36	-0.30	-1.20	

[GEO5 - Cantilever Wall | version 5.2021.68.0 | hardware key 11510 / 1 | Qengineering | Copyright © 2022 Fine spol. s r.o. All Rights Reserved | www.finesoftware.eu]
[Gross Energy Group | +995 577 545 777| d.tkebuchava@gegroup.org| http://www.gegroup.org]

No.	Surface position	Coordinates of surface points [m] x	z	x	z	Assigned soil
3	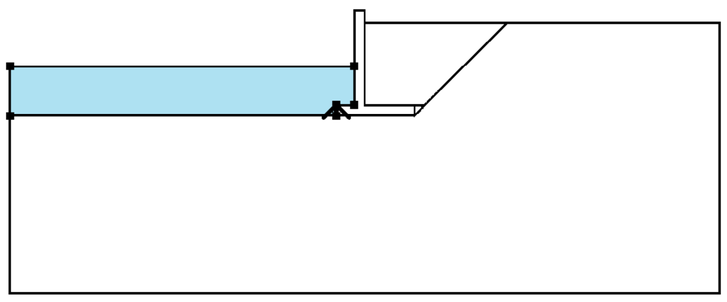	-0.80	-2.60	-0.80	-2.30	nayari
		-0.30	-2.30	-0.30	-1.20	
		-10.00	-1.20	-10.00	-2.60	
4	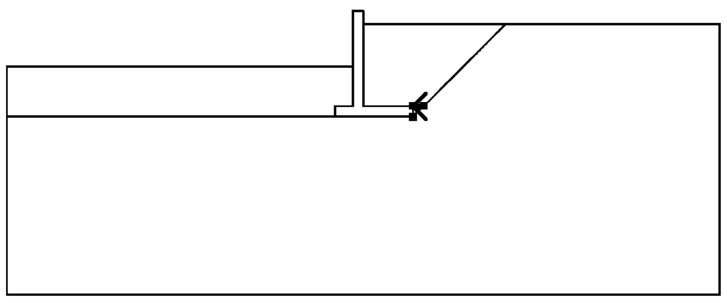	1.70	-2.30	1.40	-2.30	nayari
		1.40	-2.60			
5	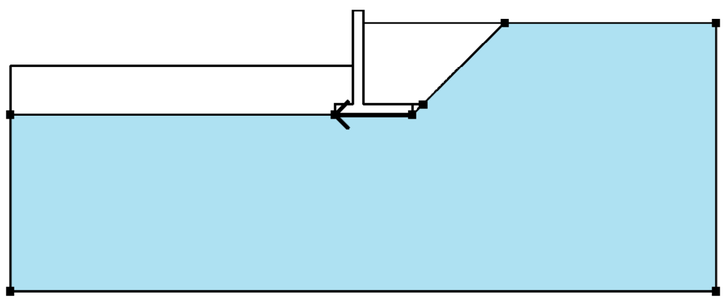	1.40	-2.60	-0.80	-2.60	sge-2
		-10.00	-2.60	-10.00	-7.60	
		10.00	-7.60	10.00	0.00	
		4.00	0.00	1.70	-2.30	

Surcharge

No.	Type	Type of action	Location z [m]	Origin x [m]	Length l [m]	Width b [m]	Slope α [°]	Magnitude q, q_1, f, F, x	q_2, z	unit
1	strip	permanent	on terrain	x = 0.00	l = 10.00		0.00	10.00		kN/m^2

Water

Water type : No water

Tensile crack

Tensile crack not input.

Earthquake

Horizontal seismic coefficient : K_h = 0.0800
Vertical seismic coefficient : K_v = 0.0000

Settings of the stage of construction

Design situation : seismic

Results (Stage of construction 1)

Analysis 1

Circular slip surface

Slip surface parameters							
Center :	x =	-0.49	[m]	Angles :	α_1 =	-45.12	[°]
	z =	2.90	[m]		α_2 =	60.06	[°]
Radius :	R =	5.81	[m]				
Analysis of the slip surface without optimization.							

[GEO5 - Cantilever Wall | version 5.2021.68.0 | hardware key 11510 / 1 | Qengineering | Copyright © 2022 Fine spol. s r.o. All Rights Reserved | www.finesoftware.eu]
[Gross Energy Group | +995 577 545 777| d.tkebuchava@gegroup.org| http://www.gegroup.org]

Slope stability verification (all methods)

Bishop :	FS = 2.79 > 1.00	**ACCEPTABLE**
Fellenius / Petterson :	FS = 2.39 > 1.00	**ACCEPTABLE**
Spencer :	FS = 2.78 > 1.00	**ACCEPTABLE**
Janbu :	FS = 2.79 > 1.00	**ACCEPTABLE**
Morgenstern-Price :	FS = 2.79 > 1.00	**ACCEPTABLE**
Shachunyanc :	FS = 2.30 > 1.00	**ACCEPTABLE**

Name : Analysis	Stage - analysis : 1 - 1

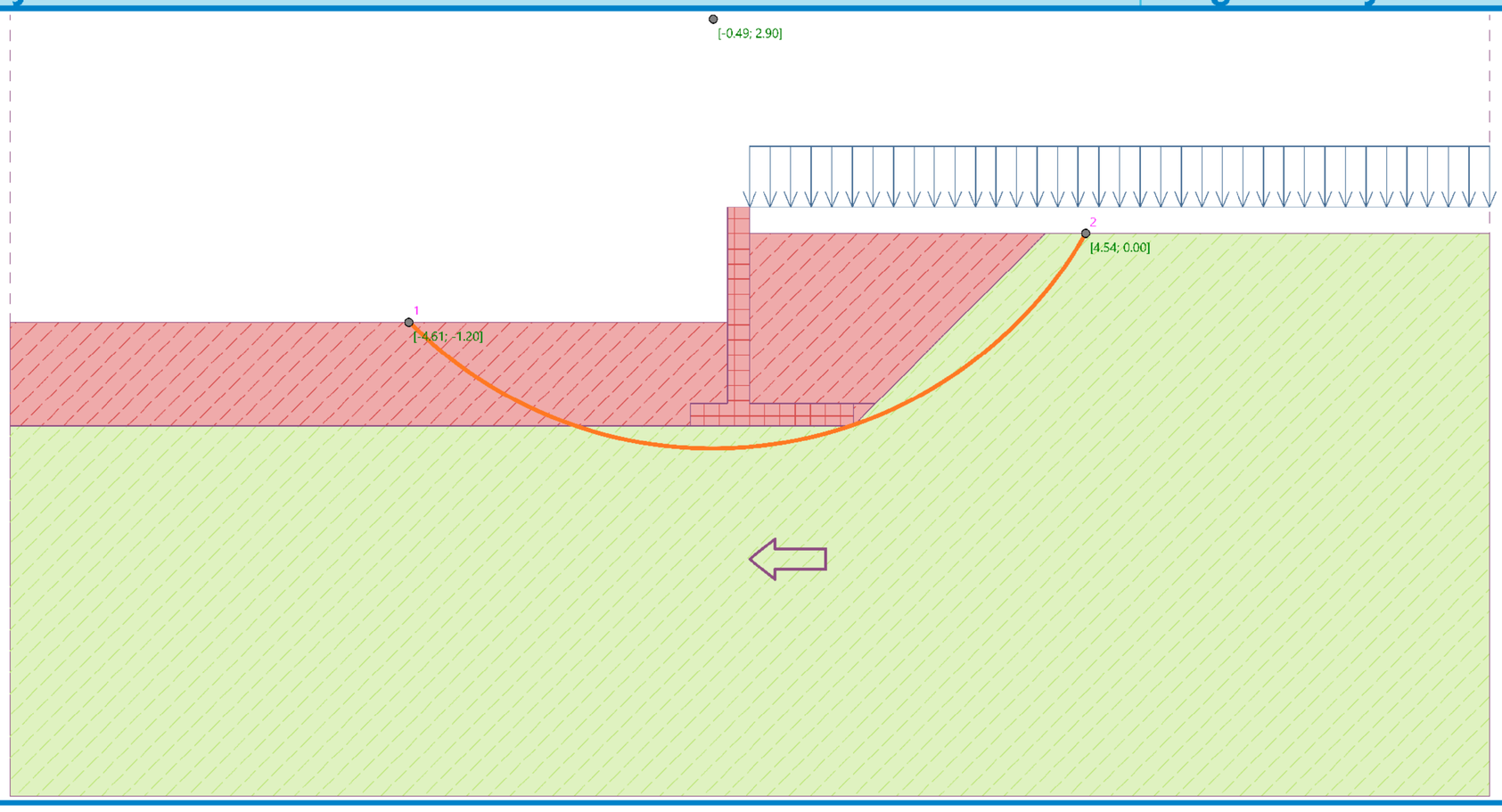

[GEO5 - Cantilever Wall | version 5.2021.68.0 | hardware key 11510 / 1 | Qengineering | Copyright © 2022 Fine spol. s r.o. All Rights Reserved | www.finesoftware.eu]
[Gross Energy Group | +995 577 545 777| d.tkebuchava@gegroup.org| http://www.gegroup.org]