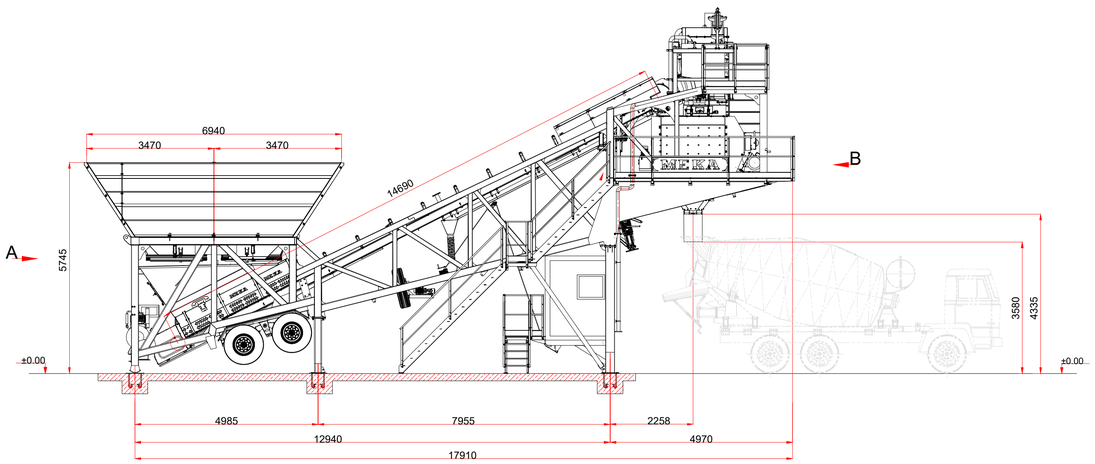

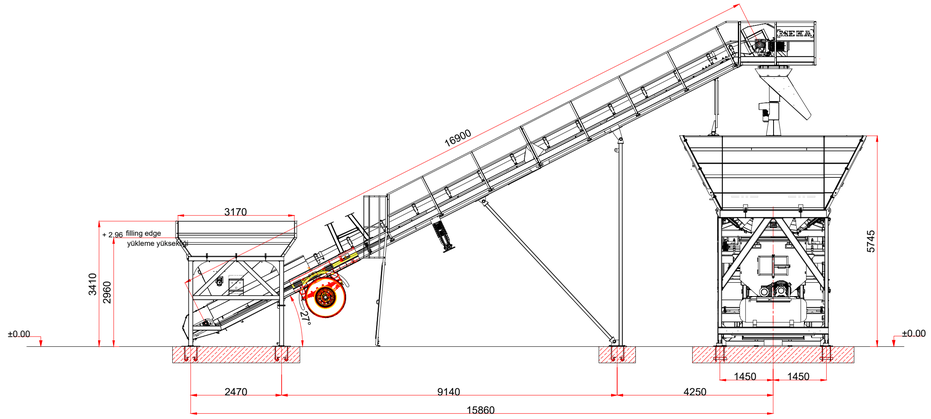

A BAKISI / SEE A

