შ.პ.ს. "მონოლითი+"

# თბილისი. ბაგები. წყნეთის გზატკეცილის №40-40ა
# ს/კ. 01.14.08.001.600 მრავალბინიანი საცხოვრებელი სახლის პროექტი

## კონსტრუქციული ნაწილი
(მუშა პროექტი)

დირექტორი:  /გ.იაშვილი./

თბილისი 2023 წ

| № | ზედნადების ატვირთვის თარიღი |
|---|---|
| 1 | ნაზავისათვის მასალების ჩატვირთვა |
| 2 | ცხენებისათვის საკმაზის მიწოდება |
| 3 | ფეხსაცმლის და ტანსაცმლის ქარხნული დამუშავების ტექნოლოგიური პროცესის ორგანიზაცია |
| 4 | სამონტაჟო ფირფიტების დამზადების ტექნოლოგიური პროცესის ავტომატიზაცია |
| 5 | სამონტაჟო ფირფიტების ასწონვის ავზების და ავზის და ჭიანჭველების ტექნიკური მახასიათებლები. |
| 6 | სამონტაჟო ფირფიტების ასწონვის ავზების ტექნიკური პირობების შემუშავება |
| 7 | სამონტაჟო ფირფიტების ასწონვის ავზების ტექნიკური პირობების შემუშავება |
| 8 | ცხენების ანატომიური აგებულების ცხენისებრების ოჯახის წარმომადგენლები |
| 9 | სამონტაჟო ფირფ. ავზები 1-1, 2-2 და 3-3 |
| 10 | ელექტრონული ფირფიტების დამზადების ტექნოლოგიური პროცესის ავტომატიზაცია |
| 11 | ელექტრონული ფირფიტების დამზადების ტექნოლოგიური პროცესის ავტომატიზაცია |
| 12 | ელექტრონული ფირფიტების დამზადების ტექნოლოგიური პროცესის ავტომატიზაცია |
| 13 | ელექტრონული ფირფიტების დამზადების ტექნოლოგიური პროცესის ავტომატიზაცია |
| 14 | ელექტრონული ფირფიტების დამზადების ტექნოლოგიური პროცესის ავტომატიზაცია |
| 15 | ელექტრონული ფირფიტების დამზადების ტექნოლოგიური პროცესის ავტომატიზაცია |
| 16 | ელექტრონული ფირფიტების დამზადების ტექნოლოგიური პროცესის ავტომატიზაცია |
| 17 | ელექტრონული ფირფიტების დამზადების ტექნოლოგიური პროცესის ავტომატიზაცია |
| 18 | ელექტრონული ფირფიტების დამზადების ტექნოლოგიური პროცესის ავტომატიზაცია |
| 19 | ელექტრონული ფირფიტების დამზადების ტექნოლოგიური პროცესის ავტომატიზაცია |
| 20 | ელექტრონული ფირფიტების დამზადების ტექნოლოგიური პროცესის ავტომატიზაცია |
| 21 | ელექტრონული ფირფიტების დამზადების ტექნოლოგიური პროცესის ავტომატიზაცია |
| 22 | ელექტრონული ფირფიტების დამზადების ტექნოლოგიური პროცესის ავტომატიზაცია |
| 23 | ელექტრონული ფირფიტების დამზადების ტექნოლოგიური პროცესის ავტომატიზაცია |
| 24 | ელექტრონული ფირფიტების დამზადების ტექნოლოგიური პროცესის ავტომატიზაცია |
| 25 | სამონტაჟო და ელექტრონული ავზების ტექნიკური პირობები |
| 26 | სამონტაჟო და ელექტრონული ავზების ტექნიკური პირობები |
| 27 | სამონტაჟო და ელექტრონული ავზების ტექნიკური პირობები |
| 28 | სამონტაჟო და ელექტრონული ავზების ტექნიკური პირობები |
| 29 | სამონტაჟო ალ-4, ალ-5. |
| 30 | ალ-1, ალ-3, ალ-7, ალ-6. |
| 31 | სამონტაჟო ალ-2, ალ-8, ჯდ-1 და ჯდ-2. |
| 32 | სამონტაჟო ჯდ-3. ალ-9, ალ-10. |
| 33 | სამონტაჟო ტექნიკური პირობები 1-1-3, 5-5. |
| 34 | სამონტაჟო ტექნიკური პირობები 1-1-3, 4-4. |
| 35 | სამონტაჟო და ელექტრონული ავზების ტექნიკური პირობები |
| 36 | სამონტაჟო და ელექტრონული ავზების ტექნიკური პირობები |
| 37 | სამონტაჟო და ელექტრონული ავზების ტექნიკური პირობები |
| 38 | სამონტაჟო და ელექტრონული ავზების ტექნიკური პირობები |
| 39 | სამონტაჟო და ელექტრონული ავზების ტექნიკური პირობები |
| 40 | სამონტაჟო ალ-1.ჭრილობის ტექნიკური პირობები 3.3-0.30 |
| 41 | სამონტაჟო ალ-1.ჭრილობის ტექნიკური პირობები 3.3-13.20 |
| 42 | სამონტაჟო ალ-1.ჭრილობის ტექნიკური პირობები 16.50 სამონტ ალ -2. ჭრილობი 2-2 |
| 43 | სამონტ ალ-1. სამონ ალ-3. ჭრილობი 1-1-3 |
| 44 | სამონ ალ-3.ჭრილობის ტექნიკური პირობები -6.60 და -3.30 |
| 45 | სამონ ალ-3.ჭრილობის ტექნიკური პირობები 0.00 და 3.30 |
| 46 | სამონ ალ-3.ჭრილობის ტექნიკური პირობები 6.60 9.90 და 13.20 |
| 47 | სამონ ალ-2.ჭრილობის ტექნიკური პირობები 3.30 |
| 48 | სამონ ალ-2.ჭრილობის ტექნიკური პირობები 6.60 და 9.90 |
| 49 | სამონ ალ-2.ჭრილობის ტექნიკური პირობები 13.20 |

| № | დასახ. № | :მისამართი | ნაზავების ჩამოწერის/ატვირთვის თარიღი | | | | ქვემოთ ხელმოწერილი ვადასტურებ, რომ ზემოთ მოყვანილი ინფორმაცია სრულად და ზუსტად ასახავს ჩატარებული სამუშაოების მოცულობას. |
|---|---|---|---|---|---|---|---|
| | | | | | | | |
| | | დაბეჭდვის | ნაზავების ჩამოწერის/ატვირთვის თარიღი | | | | |
| | | | ფურც. № | რაოდენ. | მასალა. | - | |
| | | ა - ე | | | | | |
| | | | | | | | |
| | | | | | | | |
| | |

| № | ๑ ๗ ๕ ๖ ๕ ๐ ๑ ๔ ๑ ๖ ๑ ๗ ๑ ๒ ๑ | ฐ๖๕๕๗๐๑ |
|---|---|---|
| 50 | ๔๐๘๖๕๖๑๐๑ ๒๖ ๑๕๑๔๘๖๑๐๑ ๑๖๐๗๕๑๐๑ ๘๓๘๖๕๖๑๐ | ง-46 |
| 51 | ๔๐๘๖๕๖๑๐๑ ๗๗๒๕๖๑๐๑ ๒๖ ๑๕๑๔๘๖๑๐๑ ๑๖๐๗๕๑๐๑ ๘๓๘๖๕๖๑๐. ๔๐๘๖๕๖๑๐ ๑๔-๑ ๒๖ ๑๔-๒ | ง-47 |
| 52 | ๔๐๘๖๕๖๑๐๑ ๗๗๒๕๖๕๖๑๐๑ ๒๖ ๑๕๑๔๘๖๑๐๑ ๑๖๐๗๕๑๐๑ ๘๓๘๖๕๖๑๐. ๔๐๘๖๕๖๑๐ ๑๔-๓ ๒๖ ๑๔-๔ | ง-48 |
| 53 | ๘๕๒๖๗๕๑๑ ๒๐๕๑ ๑๕๑๔๘๖๑๐๑ ๒๖๐๗๕๑๐๑ ๘๓๘๖๕๖๑๐. | ง-49 |
| 54 | ๘๕๒๖๗๕๑๑ ๒๐๕๑ ๑๕๑๔๘๖๑๐๑ ๒๖๐๗๕๑๐๑ ๘๓๘๖๕๖๑๐. | ง-50 |
| 55 | ๒๘๘๗๑๑๑ ๒๖ ๔๐๘๖๕๖๑๐๑ ๗๗๒๕๖๕๖๑๐๑ ๒๖๐๗๕๑๐๑ ๘๓๘๖๕๖๑๐. | ง-51 |
| 56 | ๘๕๒๖๗๕๗๑๑ ๒๐๕๑ ๑๕๑๔๘๖๑๐๑ ๑๕๑๔๘๖๑๐๑ ๒๖๒๖๕๖๑๐. | ง-52 |
| 57 | ๘๕๒๖๗๕๗๑๑ ๒๐๕๑ ๑๕๑๔๘๖๑๐๑ ๒๖๒๖๕๖๑๐๑ ๒๖๒๖๕๖๑๐. | ง-53 |
| 58 | ๘๐๘๐ ๗๙๔๒๕๑๐๑ ๒๘๖๕๖๑๐๑ ๒๖ ๒๗๒๖๗๕๖๑๐๑ ๑๕๑๔๘๖๑๐๑ ๒๖๒๖๕๖๑๐๑. | ง-54 |
| 59 | ๘๐๘๐ ๗๙๔๒๕๑๐๑ ๒๖๖๕๖๑๐๑ ๒๖ ๒๗๒๖๗๕๖๑๐๑ ๑๕๑๔๘๖๑๐๑ ๒๖๒๖๕๖๑๐๑. | ง-55 |
| 60 | ๑๕๒๖๗๕๑๑ ๒๐๕๑๗๐๘๐๕๑ | ง-56 |
| 61 | ๑๕๒๖๗๕๑๑ ๒๐๕๑๗๐๘๐๕๑ | ง-57 |
| 62 | ๑๕๒๖๗๕๑๑ ๒๐๕๑๗๐๘๐๕๑ ๘๖๒๙๐๑ ๒๖๙๐๑๐๑ ๗๘๗๐๘๑ | ง-58 |

ฐ๐๔๖๕๗๔๑ ๑๕๑๔๘๖๑๐๑ ๒๖๒๖๕๖๑๐๑ ๒๖๐๗๕๑๐๑ ๘๓๘๖๕

| | | | | |
|---|---|---|---|---|
| | | | | |
| | | | | |
| | | | | |

| | | | |
|---|---|---|---|
| | | | |
| | | | |
| ՀԱՏԱԿԱԳԾԻ ՀԵՂԻՆԱԿ. | ԿԱՌՈՒՑՎԱԾՔԱՅԻՆ ՀԱՏԱԿԱԳԻԾ | | |
| ՄԱՍՆԱԳԻՏԱԿԱՆ | Ա. ՕՀԱՆՅԱՆ | | |

| | | | | | |
|---|---|---|---|---|---|
| ՀԱՏԱԿԱԳԻՐ. | ԿՈՒՌՈՒՑՎԱԾՔԱՅԻՆ ՀԱՏԱԿԱԳԻԾ | | | | |
| ՄԱՍՆԱԳԻՏԱԿԱՆ | Ա. ՕՀԱՆՅԱՆ | ՀՀ ԱՇՏԱՐԱԿԻ ՄԱՐԶԻ ԳԱՎԱՌ ՔԱՂԱՔԻ ՀԱՍԱՐԱԿԱՅԻՆ ՀԱՏՎԱԾՈՒՄ ԳՏՆՎՈՂ ԱՆՇԱՐԺ ԳՈՒՅՔԻ ՀԱՍՑԵ | ՀՀ-ԱՇՏ-Գ4-Հ03 ՀԱՍԱՐԱԿԱՅԻՆ ՀԱՏՎԱԾՈՒՄ ԳՏՆՎՈՂ ԱՆՇԱՐԺ ԳՈՒՅՔԻ ՀԱՍՑԵ | | |
| ՀՀ ԱՇՏԱՐԱԿԻ ՄԱՐԶԻ ԳԱՎԱՌ ՔԱՂԱՔԻ ՀԱՍԱՐԱԿԱՅԻՆ ՀԱՏՎԱԾՈՒՄ ԳՏՆՎՈՂ ԱՆՇԱՐԺ ԳՈՒՅՔԻ ՀԱՍՑԵ | | | | | |
| Ա/Հ. 01.14.02.0016.600 ՀԱՍԱՐԱԿԱՅԻՆ ՀԱՏՎԱԾՔԻ ԿԱՌՈՒՑՎԱԾՔԱՅԻՆ ՀԱՄԱԿԱՐԳԵՐԻ ՀԱՄԱԿՑՈՒԹՅՈՒՆ | | | | | 2023 Թ. |
| ՀԱՍԱՐԱԿԱՅԻՆ ՀԱՏՎԱԾՔԻ ԿԱՌՈՒՑՎԱԾՔԱՅԻՆ ՀԱՄԱԿԱՐԳԵՐԻ ՀԱՄԱԿՑՈՒԹՅՈՒՆ | | | | | |
| ՀԱՏԱԿԱԳԻՐ. ՀԱՏԱԿԱԳԻՐ

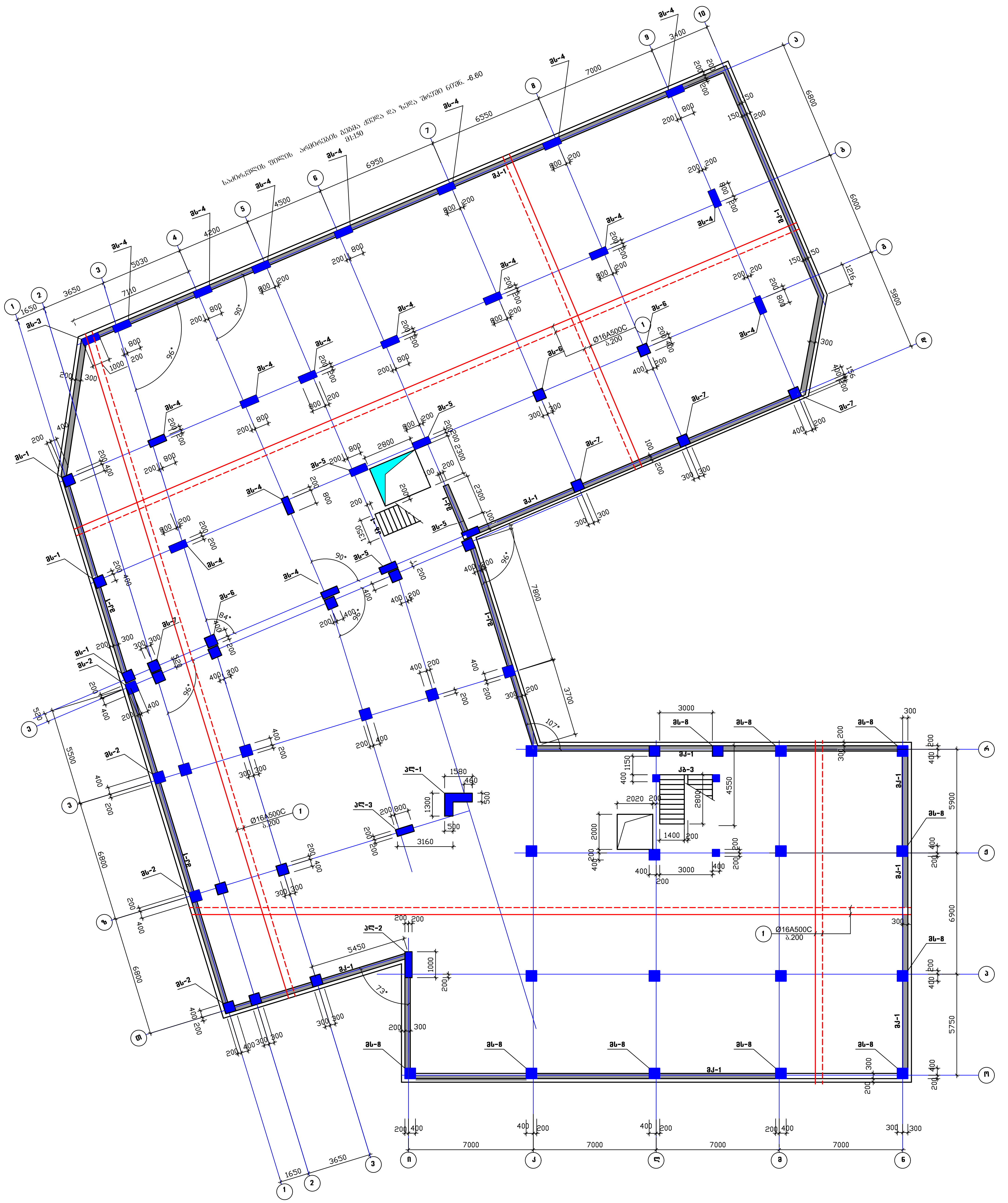


(მონოლითური კედელი მკ-1) ჭრილი ა-ა
მ1:50

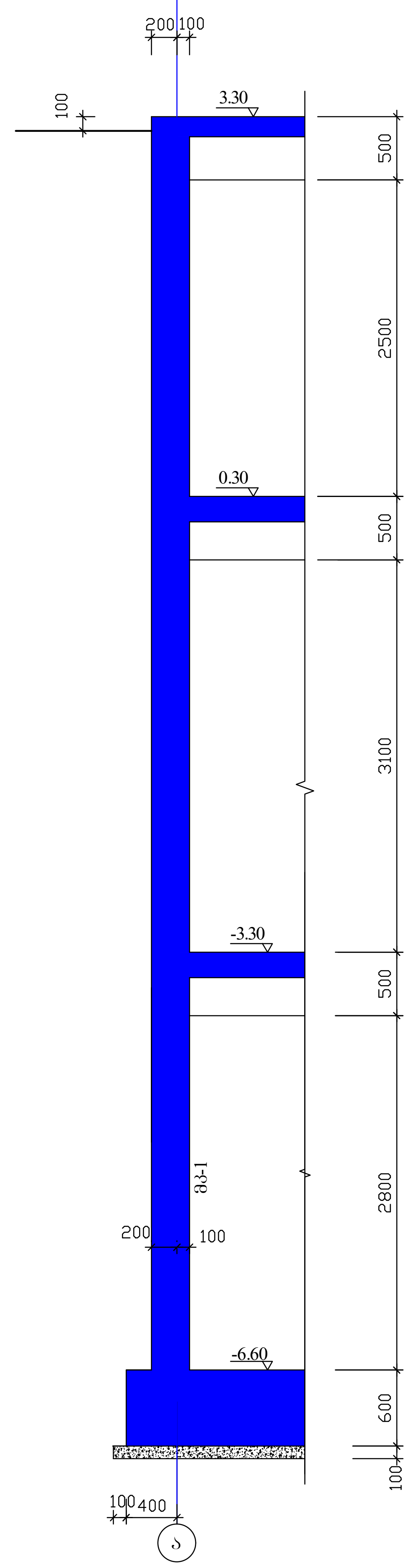


კ ვ ე თ ი ბ-ბ
მ1:20

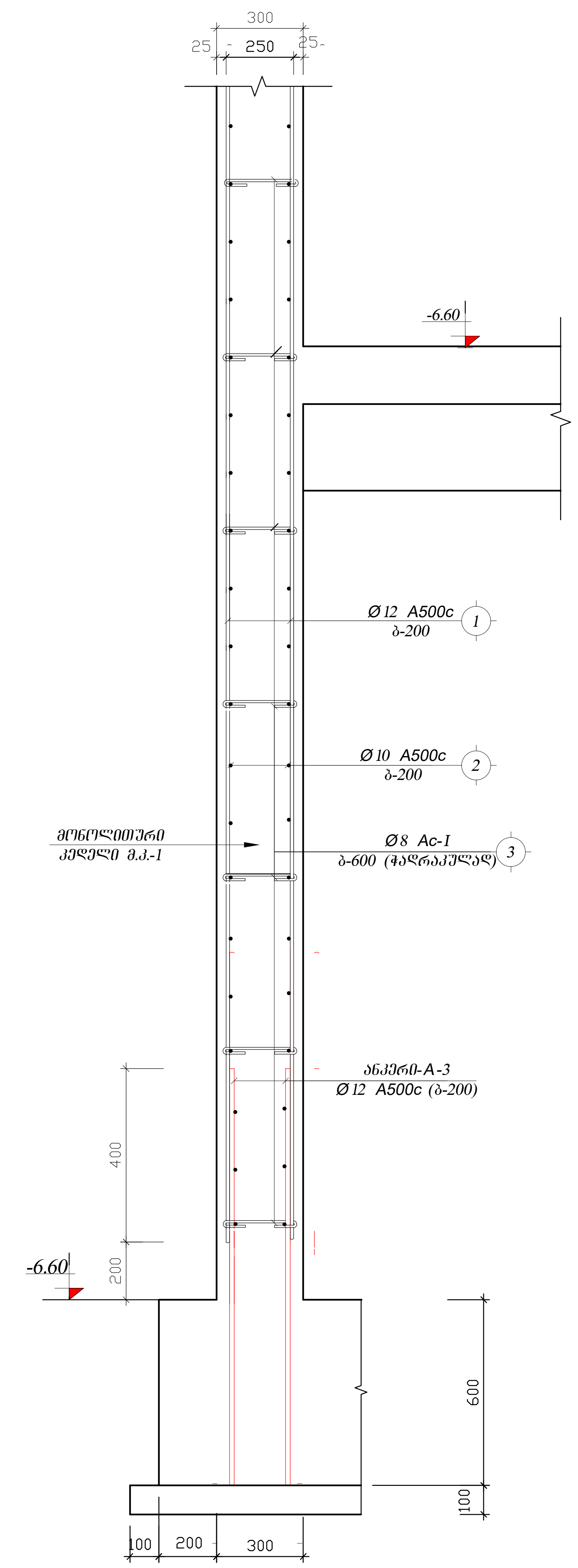


შენიშვნები:

1.პირობით ნიშნულად ± 0.00 მიღებულია I სართულის იატაკის თავის ნიშნული, რომელიც შეესაბამება აბსოლუტურ ნიშნულს გეგმაზე (540.00)

2.საინჟინრო-გეოლოგიური დასკვნის თანახმად, შენობის საძირკვლის ფუძედ მიღებულია I სგე, არგილიტების და ქვიშაქვების შრეობრივი მორიგეობა, სიმტკიცის ზღვარით ერთღერძა კუმშვაზე Rc=95.9 კგძ/სმ²

3.ქვაბულის ამოღებისას საძირკვლების ძირის ნიშნულების დასაზუსტებლად გამოძახებული იქნას საპროექტო ორგანიზაციის გეოლოგი ქვაბულის აქტით მისაღებად.

4.საძირკვლის ზედაპირები გრუნტთან შეხების ადგილებში შეილებოს ცხელი ბიტუმის ხსნარით ორჯერ.

5.ყველა დაუმარკავი სვეტი მს-1-ია.

| | | | | | | | |
|---|---|---|---|---|---|---|---|
| თბილისი. ვაკეში. წყნეთის გზატკეცილის №40-40ა ს/კ. 01.14.08.001.600 მრავალბინიანი საცხოვრებელი სახლის პროექტი | | | | საძირკვლის ფილის არმირების ზედა ქვედა და ზედა შრეში ნიშნ. -6.60 მონ. კედელი მკ-1. | | | 2023 წ. |
| დირექტორი | გ. იაშვილი | | | ფურც. № | რაოდენ. | მასშტ. | დაკვ. № |
| | | | | კ -1' | - | 1:150 | |
| კონსტრუქტ. | ლორთქიფანიძე | | | დამკვეთი: | | | |
| | | | | შ.პ.ს. "მონოლითი+" | | | |

| | | | | | |
|---|---|---|---|---|---|
| | | | | | |
| | | | | | |
| | | | | | ვ.კ.ს. "ვერტიკალი" |

| | | | | | |
|---|---|---|---|---|---|
| ინჟინერი | ს.ლომსაძე | | | | |
| ხელმძღვანელი | | | | | |
| კონსულტანტი | | | | | |
| | | | | | |
| | | | | | |
|

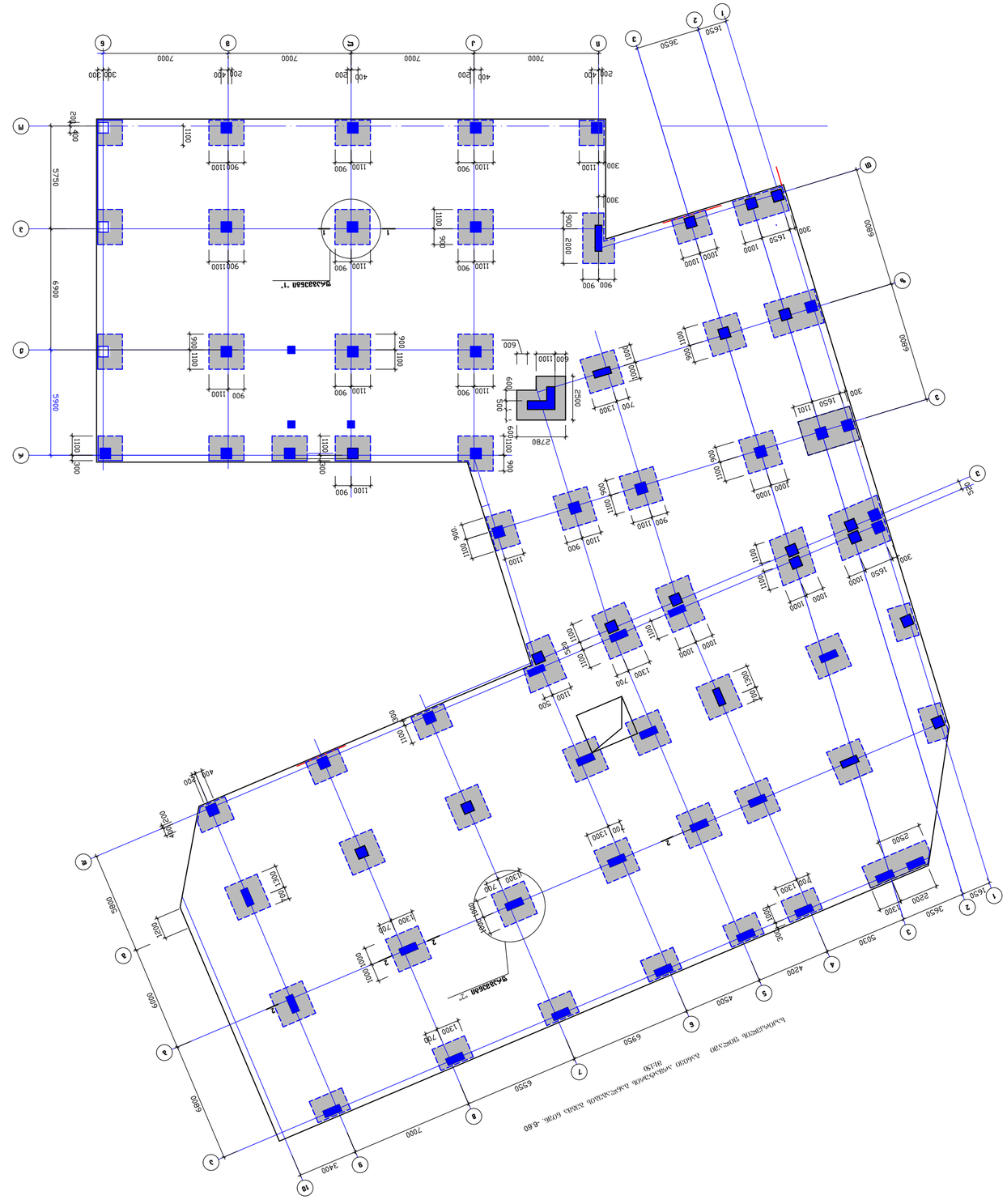
1
2
3
4
5
6
7
8
9
10
А
Б
В
Г
Д
Е
Ж
З
И
К
Л
М
7000
6950
6550
4500
4200
3400
5030
3650
1650
6800
6600
5750
6900
5900
2780
2500
1100
1000
900
700
600
500
400
300
200
1300
1650
2200
2500
3650
5030
4200
4500
6550
6950
7000
3400
6600
6800
5900
5750
6900
3650
1650
7000
7000
7000
7000
7000
2500
2200
2000
1650
1300
1100
1000
900
700
600
500
400
300
200
1:20
1:50
1:100
1:150
1:200
1:500
1:1000
1:2000
1:5000
1:10000
1:20000
1:50000
1:100000
1:200000
1:500000
1:1000000
1:2000000
1:5000000
1:10000000
1:20000000
1:50000000
1:100000000
1:200000000
1:500000000
1:1000000000
1:2000000000
1:5000000000
1:10000000000
1:20000000000
1:50000000000
1:100000000000
1:200000000000
1:500000000000
1:1000000000000
1:2000000000000
1:5000000000000
1:10000000000000
1:20000000000000
1:50000000000000
1:100000000000000
1:200000000000000
1:500000000000000
1:1000000000000000
1:2000000000000000
1:5000000000000000
1:10000000000000000
1:20000000000000000
1:50000000000000000
1:100000000000000000
1:200000000000000000
1:500000000000000000
1:1000000000000000000
1:2000000000000000000
1:5000000000000000000
1:10000000000000000000
1:20000000000000000000
1:50000000000000000000
1:100000000000000000000
1:200000000000000000000
1:500000000000000000000
1:1000000000000000000000
1:2000000000000000000000
1:5000000000000000000000
1:10000000000000000000000
1:20000000000000000000000
1:50000000000000000000000
1:100000000000000000000000
1:200000000000000000000000
1:500000000000000000000000
1:1000000000000000000000000
1:2000000000000000000000000
1:5000000000000000000000000
1:10000000000000000000000000
1:20000000000000000000000000
1:50000000000000000000000000
1:100000000000000000000000000
1:200000000000000000000000000
1:500000000000000000000000000
1:1000000000000000000000000000
1:2000000000000000000000000000
1:5000000000000000000000000000
1:10000000000000000000000000000
1:20000000000000000000000000000
1:50000000000000000000000000000
1:100000000000000000000000000000
1:200000000000000000000000000000
1:500000000000000000000000000000
1:1000000000000000000000000000000
1:2000000000000000000000000000000
1:5000000000000000000000000000000
1:10000000000000000000000000000000
1:20000000000000000000000000000000
1:50000000000000000000000000000000
1:100000000000000000000000000000000
1:200000000000000000000000000000000
1:500000000000000000000000000000000
1:1000000000000000000000000000000000
1:2000000000000000000000000000000000
1:5000000000000000000000000000000000
1:10000000000000000000000000000000000
1:20000000000000000000000000000000000
1:50000000000000000000000000000000000
1:100000000000000000000000000000000000
1:200000000000000000000000000000000000
1:500000000000000000000000000000000000
1:1000000000000000000000000000000000000
1:2000000000000000000000000000000000000
1:5000000000000000000000000000000000000
1:10000000000000000000000000000000000000
1:20000000000000000000000000000000000000
1:50000000000000000000000000000000000000
1:100000000000000000000000000000000000000
1:200000000000000000000000000000000000000
1:500000000000000000000000000000000000000
1:1000000000000000000000000000000000000000
1:2000000000000000000000000000000000000000
1:5000000000000000000000000000000000000000
1:10000000000000000000000000000000000000000
1:20000000000000000000000000000000000000000
1:50000000000000000000000000000000000000000
1:100000000000000000000000000000000000000000
1:200000000000000000000000000000000000000000
1:500000000000000000000000000000000000000000
1:1000000000000000000000000000000000000000000
1:2000000000000000000000000000000000000000000
1:5000000000000000000000000000000000000000000
1:10000000000000000000000000000000000000000000
1:20000000000000000000000000000000000000000000
1:50000000000000000000000000000000000000000000
1:100000000000000000000000000000000000000000000
1:200000000000000000000000000000000000000000000
1:500000000000000000000000000000000000000000000
1:1000000000000000000000000000000000000000000000
1:2000000000000000000000000000000000000000000000
1:5000000000000000000000000000000000000000000000
1:10000000000000000000000000000000000000000000000
1:20000000000000000000000000000000000000000000000
1:50000000000000000000000000000000000000000000000
1:100000000000000000000000000000000000000000000000
1:200000000000000000000000000000000000000000000000
1:500000000000000000000000000000000000000000000000
1:1000000000000000000000000000000000000000000000000
1:2000000000000000000000000000000000000000000000000
1:5000000000000000000000000000000000000000000000000
1:10000000000000000000000000000000000000000000000000
1:20000000000000000000000000000000000000000000000000
1:50000000000000000000000000000000000000000000000000
1:100000000000000000000000000000000000000000000000000
1:200000000000000000000000000000000000000000000000000
1:500000000000000000000000000000000000000000000000000
1:1000000000000000000000000000000000000000000000000000
1:2000000000000000000000000000000000000000000000000000
1:5000000000000000000000000000000000000000000000000000
1:10000000000000000000000000000000000000000000000000000
1:20000000000000000000000000000000000000000000000000000
1:50000000000000000000000000000000000000000000000000000
1:100000000000000000000000000000000000000000000000000000
1:200000000000000000000000000000000000000000000000000000
1:500000000000000000000000000000000000000000000000000000
1:1000000000000000000000000000000000000000000000000000000
1:2000000000000000000000000000000000000000000000000000000
1:5000000000000000000000000000000000000000000000000000000
1:10000000000000000000000000000000000000000000000000000000
1:20000000000000000000000000000000000000000000000000000000
1:50000000000000000000000000000000000000000000000000000000
1:100000000000000000000000000000000000000000000000000000000
1:200000000000000000000000000000000000000000000000000000000
1:500000000000000000000000000000000000000000000000000000000
1:1000000000000000000000000000000000000000000000000000000000
1:2000000000000000000000000000000000000000000000000000000000
1:5000000000000000000000000000000000000000000000000000000000
1:10000000000000000000000000000000000000000000000000000000000
1:20000000000000000000000000000000000000000000000000000000000
1:50000000000000000000000000000000000000000000000000000000000
1:100000000000000000000000000000000000000000000000000000000000
1:200000000000000000000000000000000000000000000000000000000000
1:500000000000000000000000000000000000000000000000000000000000
1:1000000000000000000000000000000000000000000000000000000000000
1:2000000000000000000000000000000000000000000000000000000000000
1:5000000000000000000000000000000000000000000000000000000000000
1:10000000000000000000000000000000000000000000000000000000000000
1:20000000000000000000000000000000000000000000000000000000000000
1:50000000000000000000000000000000000000000000000000000000000000
1:100000000000000000000000000000000000000000000000000000000000000
1:200000000000000000000000000000000000000000000000000000000000000
1:500000000000000000000000000000000000000000000000000000000000000
1:1000000000000000000000000000000000000000000000000000000000000000
1:2000000000000000000000000000000000000000000000000000000000000000
1:5000000000000000000000000000000000000000000000000000000000000000
1:10000000000000000000000000000000000000000000000000000000000000000
1:20000000000000000000000000000000000000000000000000000000000000000
1:50000000000000000000000000000000000000000000000000000000000000000
1:100000000000000000000000000000000000000000000000000000000000000000
1:200000000000000000000000000000000000000000000000000000000000000000
1:500000000000000000000000000000000000000000000000000000000000000000
1:1000000000000000000000000000000000000000000000000000000000000000000
1:2000000000000000000000000000000000000000000000000000000000000000000
1:5000000000000000000000000000000000000000000000000000000000000000000
1:10000000000000000000000000000000000000000000000000000000000000000000
1:20000000000000000000000000000000000000000000000000000000000000000000
1:50000000000000000000000000000000000000000000000000000000000000000000
1:100000000000000000000000000000000000000000000000000000000000000000000
1:200000000000000000000000000000000000000000000000000000000000000000000
1:500000000000000000000000000000000000000000000000000000000000000000000
1:1000000000000000000000000000000000000000000000000000000000000000000000
1:2000000000000000000000000000000000000000000000000000000000000000000000
1:5000000000000000000000000000000000000000000000000000000000000000000000
1:10000000000000000000000000000000000000000000000000000000000000000000000
1:20000000000000000000000000000000000000000000000000000000000000000000000
1:50000000000000000000000000000000000000000000000000000000000000000000000
1:100000000000000000000000000000000000000000000000000000000000000000000000
1:200000000000000000000000000000000000000000000000000000000000000000000000
1:500000000000000000000000000000000000000000000000000000000000000000000000
1:1000000000000000000000000000000000000000000000000000000000000000000000000
1:2000000000000000000000000000000000000000000000000000000000000000000000000
1:5000000000000000000000000000000000000000000000000000000000000000000000000
1:10000000000000000000000000000000000000000000000000000000000000000000000000
1:20000000000000000000000000000000000000000000000000000000000000000000000000
1:50000000000000000000000000000000000000000000000000000000000000000000000000
1:100000000000000000000000000000000000000000000000000000000000000000000000000
1:200000000000000000000000000000000000000000000000000000000000000000000000000
1:500000000000000000000000000000000000000000000000000000000000000000000000000
1:1000000000000000000000000000000000000000000000000000000000000000000000000000
1:2000000000000000000000000000000000000000000000000000000000000000000000000000
1:5000000000000000000000000000000000000000000000000000000000000000000000000000
1:10000000000000000000000000000000000000000000000000000000000000000000000000000
1:20000000000000000000000000000000000000000000000000000000000000000000000000000
1:50000000000000000000000000000000000000000000000000000000000000000000000000000
1:100000000000000000000000000000000000000000000000000000000000000000000000000000
1:200000000000000000000000000000000000000000000000000000000000000000000000000000
1:500000000000000000000000000000000000000000000000000000000000000000000000000000
1:1000000000000000000000000000000000000000000000000000000000000000000000000000000
1:2000000000000000000000000000000000000000000000000000000000000000000000000000000
1:5000000000000000000000000000000000000000000000000000000000000000000000000000000
1:10000000000000000000000000000000000000000000000000000000000000000000000000000000
1:20000000000000000000000000000000000000000000000000000000000000000000000000000000
1:50000000000000000000000000000000000000000000000000000000000000000000000000000000
1:100000000000000000000000000000000000000000000000000000000000000000000000000000000
1:200000000000000000000000000000000000000000000000000000000000000000000000000000000
1:500000000000000000000000000000000000000000000000000000000000000000000000000000000
1:1000000000000000000000000000000000000000000000000000000000000000000000000000000000
1:2000000000000000000000000000000000000000000000000000000000000000000000000000000000
1:5000000000000000000000000000000000000000000000000000000000000000000000000000000000
1:10000000000000000000000000000000000000000000000000000000000000000000000000000000000
1:20000000000000000000000000000000000000000000000000000000000000000000000000000000000
1:50000000000000000000000000000000000000000000000000000000000000000000000000000000000
1:100000000000000000000000000000000000000000000000000000000000000000000000000000000000
1:200000000000000000000000000000000000000000000000000000000000000000000000000000000000
1:500000000000000000000000000000000000000000000000000000000000000000000000000000000000
1:1000000000000000000000000000000000000000000000000000000000000000000000000000000000000
1:2000000000000000000000000000000000000000000000000000000000000000000000000000000000000
1:5000000000000000000000000000000000000000000000000000000000000000000000000000000000000
1:10000000000000000000000000000000000000000000000000000000000000000000000000000000000000
1:20000000000000000000000000000000000000000000000000000000000000000000000000000000000000
1:50000000000000000000000000000000000000000000000000000000000000000000000000000000000000
1:100000000000000000000000000000000000000000000000000000000000000000000000000000000000000
1:200000000000000000000000000000000000000000000000000000000000000000000000000000000000000
1:500000000000000000000000000000000000000000000000000000000000000000000000000000000000000
1:1000000000000000000000000000000000000000000000000000000000000000000000000000000000000000
1:2000000000000000000000000000000000000000000000000000000000000000000000000000000000000000
1:5000000000000000000000000000000000000000000000000000000000000000000000000000000000000000
1:10000000000000000000000000000000000000000000000000000000000000000000000000000000000000000
1:20000000000000000000000000000000000000000000000000000000000000000000000000000000000000000
1:50000000000000000000000000000000000000000000000000000000000000000000000000000000000000000
1:100000000000000000000000000000000000000000000000000000000000000000000000000000000000000000
1:200000000000000000000000000000000000000000000000000000000000000000000000000000000000000000
1:500000000000000000000000000000000000000000000000000000000000000000000000000000000000000000
1:1000000000000000000000000000000000000000000000000000000000000000000000000000000000000000000
1:2000000000000000000000000000000000000000000000000000000000000000000000000000000000000000000
1:5000000000000000000000000000000000000000000000000000000000000000000000000000000000000000000
1:10000000000000000000000000000000000000000000000000000000000000000000000000000000000000000000
1:20000000000000000000000000000000000000000000000000000000000000000000000000000000000000000000
1:50000000000000000000000000000000000000000000000000000000000000000000000000000000000000000000
1:100000000000000000000000000000000000000000000000000000000000000000000000000000000000000000000
1:200000000000000000000000000000000000000000000000000000000000000000000000000000000000000000000
1:500000000000000000000000000000000000000000000000000000000000000000000000000000000000000000000
1:1000000000000000000000000000000000000000000000000000000000000000000000000000000000000000000000
1:2000000000000000000000000000000000000000000000000000000000000000000000000000000000000000000000
1:5000000000000000000000000000000000000000000000000000000000000000000000000000000000000000000000
1:10000000000000000000000000000000000000000000000000000000000000000000000000000000000000000000000
1:20000000000000000000000000000000000000000000000000000000000000000000000000000000000000000000000
1:50000000000000000000000000000000000000000000000000000000000000000000000000000000000000000000000
1:100000000000000000000000000000000000000000000000000000000000000000000000000000000000000000000000
1:200000000000000000000000000000000000000000000000000000000000000000000000000000000000000000000000
1:500000000000000000000000000000000000000000000000000000000000000000000000000000000000000000000000
1:1000000000000000000000000000000000000000000000000000000000000000000000000000000000000000000000000
1:2000000000000000000000000000000000000000000000000000000000000000000000000000000000000000000000000
1:5000000000000000000000000000000000000000000000000000000000000000000000000000000000000000000000000
1:10000000000000000000000000000000000000000000000000000000000000000000000000000000000000000000000000
1:20000000000000000000000000000000000000000000000000000000000000000000000000000000000000000000000000
1:50000000000000000000000000000000000000000000000000000000000000000000000000000000000000000000000000
1:100000000000000000000000000000000000000000000000000000000000000000000000000000000000000000000000000
1:200000000000000000000000000000000000000000000000000000000000000000000000000000000000000000000000000
1:500000000000000000000000000000000000000000000000000000000000000000000000000000000000000000000000000
1:1000000000000000000000000000000000000000000000000000000000000000000000000000000000000000000000000000
1:2000000000000000000000000000000000000000000000000000000000000000000000000000000000000000000000000000
1:5000000000000000000000000000000000000000000000000000000000000000000000000000000000000000000000000000
1:10000000000000000000000000000000000000000000000000000000000000000000000000000000000000000000000000000
1:20000000000000000000000000000000000000000000000000000000000000000000000000000000000000000000000000000
1:50000000000000000000000000000000000000000000000000000000000000000000000000000000000000000000000000000
1:100000000000000000000000000000000000000000000000000000000000000000000000000000000000000000000000000000
1:200000000000000000000000000000000000000000000000000000000000000000000000000000000000000000000000000000
1:500000000000000000000000000000000000000000000000000000000000000000000000000000000000000000000000000000
1:1000000000000000000000000000000000000000000000000000000000000000000000000000000000000000000000000000000
1:2000000000000000000000000000000000000000000000000000000000000000000000000000000000000000000000000000000
1:5000000000000000000000000000000000000000000000000000000000000000000000000000000000000000000000000000000
1:10000000000000000000000000000000000000000000000000000000000000000000000000000000000000000000000000000000
1:20000000000000000000000000000000000000000000000000000000000000000000000000000000000000000000000000000000
1:50000000000000000000000000000000000000000000000000000000000000000000000000000000000000000000000000000000
1:100000000000000000000000000000000000000000000000000000000000000000000000000000000000000000000000000000000
1:200000000000000000000000000000000000000000000000000000000000000000000000000000000000000000000000000000000
1:500000000000000000000000000000000000000000000000000000000000000000000000000000000000000000000000000000000
1:1000000000000000000000000000000000000000000000000000000000000000000000000000000000000000000000000000000000
1:2000000000000000000000000000000000000000000000000000000000000000000000000000000000000000000000000000000000
1:5000000000000000000000000000000000000000000000000000000000000000000000000000000000000000000000000000000000
1:10000000000000000000000000000000000000000000000000000000000000000000000000000000000000000000000000000000000
1:20000000000000000000000000000000000000000000000000000000000000000000000000000000000000000000000000000000000
1:50000000000000000000000000000000000000000000000000000000000000000000000000000000000000000000000000000000000
1:100000000000000000000000000000000000000000000000000000000000000000000000000000000000000000000000000000000000
1:200000000000000000000000000000000000000000000000000000000000000000000000000000000000000000000000000000000000
1:500000000000000000000000000000000000000000000000000000000000000000000000000000000000000000000000000000000000
1:1000000000000000000000000000000000000000000000000000000000000000000000000000000000000000000000000000000000000
1:2000000000000000000000000000000000000000000000000000000000000000000000000000000000000000000000000000000000000
1:5000000000000000000000000000000000000000000000000000000000000000000000000000000000000000000000000000000000000
1:10000000000000000000000000000000000000000000000000000000000000000000000000000000000000000000000000000000000000
1:20000000000000000000000000000000000000000000000000000000000000000000000000000000000000000000000000000000000000
1:50000000000000000000000000000000000000000000000000000000000000000000000000000000000000000000000000000000000000
1:100000000000000000000000000000000000000000000000000000000000000000000000000000000000000000000000000000000000000
1:200000000000000000000000000000000000000000000000000000000000000000000000000000000000000000000000000000000000000
1:500000000000000000000000000000000000000000000000000000000000000000000000000000000000000000000000000000000000000
1:1000000000000000000000000000000000000000000000000000000000000000000000000000000000000000000000000000000000000000
1:2000000000000000000000000000000000000000000000000000000000000000000000000000000000000000000000000000000000000000
1:5000000000000000000000000000000000000000000000000000000000000000000000000000000000000000000000000000000000000000
1:10000000000000000000000000000000000000000000000000000000000000000000000000000000000000000000000000000000000000000
1:20000000000000000000000000000000000000000000000000000000000000000000000000000000000000000000000000000000000000000
1:50000000000000000000000000000000000000000000000000000000000000000000000000000000000000000000000000000000000000000
1:100000000000000000000000000000000000000000000000000000000000000000000000000000000000000000000000000000000000000000
1:200000000000000000000000000000000000000000000000000000000000000000000000000000000000000000000000000000000000000000
1:500000000000000000000000000000000000000000000000000000000000000000000000000000000000000000000000000000000000000000
1:1000000000000000000000000000000000000000000000000000000000000000000000000000000000000000000000000000000000000000000
1:2000000000000000000000000000000000000000000000000000000000000000000000000000000000000000000000000000000000000000000
1:5000000000000000000000000000000000000000000000000000000000000000000000000000000000000000000000000000000000000000000
1:10000000000000000000000000000000000000000000000000000000000000000000000000000000000000000000000000000000000000000000
1:20000000000000000000000000000000000000000000000000000000000000000000000000000000000000000000000000000000000000000000
1:50000000000000000000000000000000000000000000000000000000000000000000000000000000000000000000000000000000000000000000
1:100000000000000000000000000000000000000000000000000000000000000000000000000000000000000000000000000000000000000000000
1:200000000000000000000000000000000000000000000000000000000000000000000000000000000000000000000000000000000000000000000
1:500000000000000000000000000000000000000000000000000000000000000000000000000000000000000000000000000000000000000000000
1:1000000000000000000000000000000000000000000000000000000000000000000000000000000000000000000000000000000000000000000000
1:2000000000000000000000000000000000000000000000000000000000000000000000000000000000000000000000000000000000000000000000
1:5000000000000000000000000000000000000000000000000000000000000000000000000000000000000000000000000000000000000000000000
1:10000000000000000000000000000000000000000000000000000000000000000000000000000000000000000000000000000000000000000000000
1:20000000000000000000000000000000000000000000000000000000000000000000000000000000000000000000000000000000000000000000000
1:50000000000000000000000000000000000000000000000000000000000000000000000000000000000000000000000000000000000000000000000
1:100000000000000000000000000000000000000000000000000000000000000000000000000000000000000000000000000000000000000000000000
1:200000000000000000000000000000000000000000000000000000000000000000000000000000000000000000000000000000000000000000000000
1:500000000000000000000000000000000000000000000000000000000000000000000000000000000000000000000000000000000000000000000000
1:1000000000000000000000000000000000000000000000000000000000000000000000000000000000000000000000000000000000000000000000000
1:2000000000000000000000000000000000000000000000000000000000000000000000000000000000000000000000000000000000000000000000000
1:5000000000000000000000000000000000000000000000000000000000000000000000000000000000000000000000000000000000000000000000000
1:10000000000000000000000000000000000000000000000000000000000000000000000000000000000000000000000000000000000000000000000000
1:20000000000000000000000000000000000000000000000000000000000000000000000000000000000000000000000000000000000000000000000000
1:50000000000000000000000000000000000000000000000000000000000000000000000000000000000000000000000000000000000000000000000000
1:100000000000000000000000000000000000000000000000000000000000000000000000000000000000000000000000000000000000000000000000000
1:200000000000000000000000000000000000000000000000000000000000000000000000000000000000000000000000000000000000000000000000000
1:500000000000000000000000000000000000000000000000000000000000000000000000000000000000000000000000000000000000000000000000000
1:1000000000000000000000000000000000000000000000000000000000000000000000000000000000000000000000000000000000000000000000000000
1:2000000000000000000000000000000000000000000000000000000000000000000000000000000000000000000000000000000000000000000000000000
1:5000000000000000000000000000000000000000000000000000000000000000000000000000000000000000000000000000000000000000000000000000
1:10000000000000000000000000000000000000000000000000000000000000000000000000000000000000000000000000000000000000000000000000000
1:20000000000000000000000000000000000000000000000000000000000000000000000000000000000000000000000000000000000000000000000000000
1:50000000000000000000000000000000000000000000000000000000000000000000000000000000000000000000000000000000000000000000000000000
1:100000000000000000000000000000000000000000000000000000000000000000000000000000000000000000000000000000000000000000000000000000
1:200000000000000000000000000000000000000000000000000000000000000000000000000000000000000000000000000000000000000000000000000000
1:500000000000000000000000000000000000000000000000000000000000000000000000000000000000000000000000000000000000000000000000000000
1:1000000000000000000000000000000000000000000000000000000000000000000000000000000000000000000000000000000000000000000000000000000
1:2000000000000000000000000000000000000000000000000000000000000000000000000000000000000000000000000000000000000000000000000000000
1:5000000000000000000000000000000000000000000000000000000000000000000000000000000000000000000000000000000000000000000000000000000
1:10000000000000000000000000000000000000000000000000000000000000000000000000000000000000000000000000000000000000000000000000000000
1:20000000000000000000000000000000000000000000000000000000000000000000000000000000000000000000000000000000000000000000000000000000
1:50000000000000000000000000000000000000000000000000000000000000000000000000000000000000000000000000000000000000000000000000000000
1:100000000000000000000000000000000000000000000000000000000000000000000000000000000000000000000000000000000000000000000000000000000
1:200000000000000000000000000000000000000000000000000000000000000000000000000000000000000000000000000000000000000000000000000000000
1:500000000000000000000000000000000000000000000000000000000000000000000000000000000000000000000000000000000000000000000000000000000
1:1000000000000000000000000000000000000000000000000000000000000000000000000000000000000000000000000000000000000000000000000000000000
1:2000000000000000000000000000000000000000000000000000000000000000000000000000000000000000000000000000000000000000000000000000000000
1:5000000000000000000000000000000000000000000000000000000000000000000000000000000000000000000000000000000000000000000000000000000000
1:10000000000000000000000000000000000000000000000000000000000000000000000000000000000000000000000000000000000000000000000000000000000
1:20000000000000000000000000000000000000000000000000000000000000000000000000000000000000000000000000000000000000000000000000000000000
1:50000000000000000000000000000000000000000000000000000000000000000000000000000000000000000000000000000000000000000000000000000000000
1:100000000000000000000000000000000000000000000000000000000000000000000000000000000000000000000000000000000000000000000000000000000000
1:200000000000000000000000000000000000000000000000000000000000000000000000000000000000000000000000000000000000000000000000000000000000
1:500000000000000000000000000000000000000000000000000000000000000000000000000000000000000000000000000000000000000000000000000000000000
1:1000000000000000000000000000000000000000000000000000000000000000000000000000000000000000000000000000000000000000000000000000000000000
1:2000000000000000000000000000000000000000000000000000000000000000000000000000000000000000000000000000000000000000000000000000000000000
1:5000000000000000000000000000000000000000000000000000000000000000000000000000000000000000000000000000000000000000000000000000000000000
1:10000000000000000000000000000000000000000000000000000000000000000000000000000000000000000000000000000000000000000000000000000000000000
1:20000000000000000000000000000000000000000000000000000000000000000000000000000000000000000000000000000000000000000000000000000000000000
1:50000000000000000000000000000000000000000000000000000000000000000000000000000000000000000000000000000000000000000000000000000000000000
1:100000000000000000000000000000000000000000000000000000000000000000000000000000000000000000000000000000000000000000000000000000000000000
1:200000000000000000000000000000000000000000000000000000000000000000000000000000000000000000000000000000000000000000000000000000000000000
1:500000000000000000000000000000000000000000000000000000000000000000000000000000000000000000000000000000000000000000000000000000000000000
1:1000000000000000000000000000000000000000000000000000000000000000000000000000000000000000000000000000000000000000000000000000000000000000
1:2000000000000000000000000000000000000000000000000000000000000000000000000000000000000000000000000000000000000000000000000000000000000000
1:5000000000000000000000000000000000000000000000000000000000000000000000000000000000000000000000000000000000000000000000000000000000000000
1:10000000000000000000000000000000000000000000000000000000000000000000000000000000000000000000000000000000000000000000000000000000000000000
1:20000000000000000000000000000000000000000000000000000000000000000000000000000000000000000000000000000000000000000000000000000000000000000
1:50000000000000000000000000000000000000000000000000000000000000000000000000000000000000000000000000000000000000000000000000000000000000000
1:100000000000000000000000000000000000000000000000000000000000000000000000000000000000000000000000000000000000000000000000000000000000000000
1:200000000000000000000000000000000000000000000000000000000000000000000000000000000000000000000000000000000000000000000000000000000000000000
1:500000000000000000000000000000000000000000000000000000000000000000000000000000000000000000000000000000000000000000000000000000000000000000
1:1000000000000000000000000000000000000000000000000000000000000000000000000000000000000000000000000000000000000000000000000000000000000000000
1:2000000000000000000000000000000000000000000000000000000000000000000000000000000000000000000000000000000000000000000000000000000000000000000
1:5000000000000000000000000000000000000000000000000000000000000000000000000000000000000000000000000000000000000000000000000000000000000000000
1:10000000000000000000000000000000000000000000000000000000000000000000000000000000000000000000000000000000000000000000000000000000000000000000
1:20000000000000000000000000000000000000000000000000000000000000000000000000000000000000000000000000000000000000000000000000000000000000000000
1:50000000000000000000000000000000000000000000000000000000000000000000000000000000000000000000000000000000000000000000000000000000000000000000
1:100000000000000000000000000000000000000000000000000000000000000000000000000000000000000000000000000000000000000000000000000000000000000000000
1:200000000000000000000000000000000000000000000000000000000000000000000000000000000000000000000000000000000000000000000000000000000000000000000
1:500000000000000000000000000000000000000000000000000000000000000000000000000000000000000000000000000000000000000000000000000000000000000000000
1:1000000000000000000000000000000000000000000000000000000000000000000000000000000000000000000000000000000000000000000000000000000000000000000000
1:2000000000000000000000000000000000000000000000000000000000000000000000000000000000000000000000000000000000000000000000000000000000000000000000
1:5000000000000000000000000000000000000000000000000000000000000000000000000000000000000000000000000000000000000000000000000000000000000000000000
1:10000000000000000000000000000000000000000000000000000000000000000000000000000000000000000000000000000000000000000000000000000000000000000000000
1:20000000000000000000000000000000000000000000000000000000000000000000000000000000000000000000000000000000000000000000000000000000000000000000000
1:50000000000000000000000000000000000000000000000000000000000000000000000000000000000000000000000000000000000000000000000000000000000000000000000
1:100000000000000000000000000000000000000000000000000000000000000000000000000000000000000000000000000000000000000000000000000000000000000000000000
1:200000000000000000000000000000000000000000000000000000000000000000000000000000000000000000000000000000000000000000000000000000000000000000000000
1:500000000000000000000000000000000000000000000000000000000000000000000000000000000000000000000000000000000000000000000000000000000000000000000000
1:1000000000000000000000000000000000000000000000000000000000000000000000000000000000000000000000000000000000000000000000000000000000000000000000000
1:2000000000000000000000000000000000000000000000000000000000000000000000000000000000000000000000000000000000000000000000000000000000000000000000000
1:5000000000000000000000000000000000000000000000000000000000000000000000000000000000000000000000000000000000000000000000000000000000000000000000000
1:10000000000000000000000000000000000000000000000000000000000000000000000000000000000000000000000000000000000000000000000000000000000000000000000000
1:20000000000000000000000000000000000000000000000000000000000000000000000000000000000000000000000000000000000000000000000000000000000000000000000000
1:50000000000000000000000000000000000000000000000000000000000000000000000000000000000000000000000000000000000000000000000000000000000000000000000000
1:100000000000000000000000000000000000000000000000000000000000000000000000000000000000000000000000000000000000000000000000000000000000000000000000000
1:200000000000000000000000000000000000000000000000000000000000000000000000000000000000000000000000000000000000000000000000000000000000000000000000000
1:500000000000000000000000000000000000000000000000000000000000000000000000000000000000000000000000000000000000000000000000000000000000000000000000000
1:1000000000000000000000000000000000000000000000000000000000000000000000000000000000000000000000000000000000000000000000000000000000000000000000000000
1:2000000000000000000000000000000000000000000000000000000000000000000000000000000000000000000000000000000000000000000000000000000000000000000000000000
1:5000000000000000000000000000000000000000000000000000000000000000000000000000000000000000000000000000000000000000000000000000000000000000000000000000
1:10000000000000000000000000000000000000000000000000000000000000000000000000000000000000000000000000000000000000000000000000000000000000000000000000000
1:20000000000000000000000000000000000000000000000000000000000000000000000000000000000000000000000000000000000000000000000000000000000000000000000000000
1:50000000000000000000000000000000000000000000000000000000000000000000000000000000000000000000000000000000000000000000000000000000000000000000000000000
1:100000000000000000000000000000000000000000000000000000000000000000000000000000000000000000000000000000000000000000000000000000000000000000000000000000
1:200000000000000000000000000000000000000000000000000000000000000000000000000000000000000000000000000000000000000000000000000000000000000000000000000000
1:500000000000000000000000000000000000000000000000000000000000000000000000000000000000000000000000000000000000000000000000000000000000000000000000000000
1:1000000000000000000000000000000000000000000000000000000000000000000000000000000000000000000000000000000000000000000000000000000000000000000000000000000
1:2000000000000000000000000000000000000000000000000000000000000000000000000000000000000000000000000000000000000000000000000000000000000000000000000000000
1:5000000000000000000000000000000000000000000000000000000000000000000000000000000000000000000000000000000000000000000000000000000000000000000000000000000
1:10000000000000000000000000000000000000000000000000000000000000000000000000000000000000000000000000000000000000000000000000000000000000000000000000000000
1:20000000000000000000000000000000000000000000000000000000000000000000000000000000000000000000000000000000000000000000000000000000000000000000000000000000
1:50000000000000000000000000000000000000000000000000000000000000000000000000000000000000000000000000000000000000000000000000000000000000000000000000000000
1:100000000000000000000000000000000000000000000000000000000000000000000000000000000000000000000000000000000000000000000000000000000000000000000000000000000
1:200000000000000000000000000000000000000000000000000000000000000000000000000000000000000000000000000000000000000000000000000000000000000000000000000000000
1:500000000000000000000000000000000000000000000000000000000000000000000000000000000000000000000000000000000000000000000000000000000000000000000000000000000
1:1000000000000000000000000000000000000000000000000000000000000000000000000000000000000000000000000000000000000000000000000000000000000000000000000000000000
1:2000000000000000000000000000000000000000000000000000000000000000000000000000000000000000000000000000000000000000000000000000000000000000000000000000000000
1:5000000000000000000000000000000000000000000000000000000000000000000000000000000000000000000000000000000000000000000000000000000000000000000000000000000000
1:10000000000000000000000000000000000000000000000000000000000000000000000000000000000000000000000000000000000000000000000000000000000000000000000000000000000
1:20000000000000000000000000000000000000000000000000000000000000000000000000000000000000000000000000000000000000000000000000000000000000000000000000000000000
1:50000000000000000000000000000000000000000000000000000000000000000000000000000000000000000000000000000000000000000000000000000000000000000000000000000000000
1:100000000000000000000000000000000000000000000000000000000000000000000000000000000000000000000000000000000000000000000000000000000000000000000000000000000000
1:200000000000000000000000000000000000000000000000000000000000000000000000000000000000000000000000000000000000000000000000000000000000000000000000000000000000
1:500000000000000000000000000000000000000000000000000000000000000000000000000000000000000000000000000000000000000000000000000000000000000000000000000000000000
1:1000000000000000000000000000000000000000000000000000000000000000000000000000000000000000000000000000000000000000000000000000000000000000000000000000000000000
1:2000000000000000000000000000000000000000000000000000000000000000000000000000000000000000000000000000000000000000000000000000000000000000000000000000000000000
1:5000000000000000000000000000000000000000000000000000000000000000000000000000000000000000000000000000000000000000000000000000000000000000000000000000000000000
1:10000000000000000000000000000000000000000000000000000000000000000000000000000000000000000000000000000000000000000000000000000000000000000000000000000000000000
1:20000000000000000000000000000000000000000000000000000000000000000000000000000000000000000000000000000000000000000000000000000000000000000000000000000000000000
1:50000000000000000000000000000000000000000000000000000000000000000000000000000000000000000000000000000000000000000000000000000000000000000000000000000000000000
1:100000000000000000000000000000000000000000000000000000000000000000000000000000000000000000000000000000000000000000000000000000000000000000000000000000000000000
1:200000000000000000000000000000000000000000000000000000000000000000000000000000000000000000000000000000000000000000000000000000000000000000000000000000000000000
1:500000000000000000000000000000000000000000000000000000000000000000000000000000000000000000000000000000000000000000000000000000000000000000000000000000000000000
1:1000000000000000000000000000000000000000000000000000000000000000000000000000000000000000000000000000000000000000000000000000000000000000000000000000000000000000
1:2000000000000000000000000000000000000000000000000000000000000000000000000000000000000000000000000000000000000000000000000000000000000000000000000000000000000000
1:5000000000000000000000000000000000000000000000000000000000000000000000000000000000000000000000000000000000000000000000000000000000000000000000000000000000000000
1:10000000000000000000000000000000000000000000000000000000000000000000000000000000000000000000000000000000000000000000000000000000000000000000000000000000000000000
1:20000000000000000000000000000000000000000000000000000000000000000000000000000000000000000000000000000000000000000000000000000000000000000000000000000000000000000
1:50000000000000000000000000000000000000000000000000000000000000000000000000000000000000000000000000000000000000000000000000000000000000000000000000000000000000000
1:100000000000000000000000000000000000000000000000000000000000000000000000000000000000000000000000000000000000000000000000000000000000000000000000000000000000000000
1:200000000000000000000000000000000000000000000000000000000000000000000000000000000000000000000000000000000000000000000000000000000000000000000000000000000000000000
1:500000000000000000000000000000000000000000000000000000000000000000000000000000000000000000000000000000000000000000000000000000000000000000000000000000000000000000
1:1000000000000000000000000000000000000000000000000000000000000000000000000000000000000000000000000000000000000000000000000000000000000000000000000000000000000000000
1:2000000000000000000000000000000000000000000000000000000000000000000000000000000000000000000000000000000000000000000000000000000000000000000000000000000000000000000
1:5000000000000000000000000000000000000000000000000000000000000000000000000000000000000000000000000000000000000000000000000000000000000000000000000000000000000000000
1:10000000000000000000000000000000000000000000000000000000000000000000000000000000000000000000000000000000000000000000000000000000000000000000000000000000000000000000
1:20000000000000000000000000000000000000000000000000000000000000000000000000000000000000000000000000000000000000000000000000000000000000000000000000000000000000000000
1:50000000000000000000000000000000000000000000000000000000000000000000000000000000000000000000000000000000000000000000000000000000000000000000000000000000000000000000
1:100000000000000000000000000000000000000000000000000000000000000000000000000000000000000000000000000000000000000000000000000000000000000000000000000000000000000000000
1:200000000000000000000000000000000000000000000000000000000000000000000000000000000000000000000000000000000000000000000000000000000000000000000000000000000000000000000
1:500000000000000000000000000000000000000000000000000000000000000000000000000000000000000000000000000000000000000000000000000000000000000000000000000000000000000000000
1:1000000000000000000000000000000000000000000000000000000000000000000000000000000000000000000000000000000000000000000000000000000000000000000000000000000000000000000000
1:2000000000000000000000000000000000000000000000000000000000000000000000000000000000000000000000000000000000000000000000000000000000000000000000000000000000000000000000
1:5000000000000000000000000000000000000000000000000000000000000000000000000000000000000000000000000000000000000000000000000000000000000000000000000000000000000000000000
1:10000000000000000000000000000000000000000000000000000000000000000000000000000000000000000000000000000000000000000000000000000000000000000000000000000000000000000000000
1:20000000000000000000000000000000000000000000000000000000000000000000000000000000000000000000000000000000000000000000000000000000000000000000000000000000000000000000000
1:50000000000000000000000000000000000000000000000000000000000000000000000000000000000000000000000000000000000000000000000000000000000000000000000000000000000000000000000
1:100000000000000000000000000000000000000000000000000000000000000000

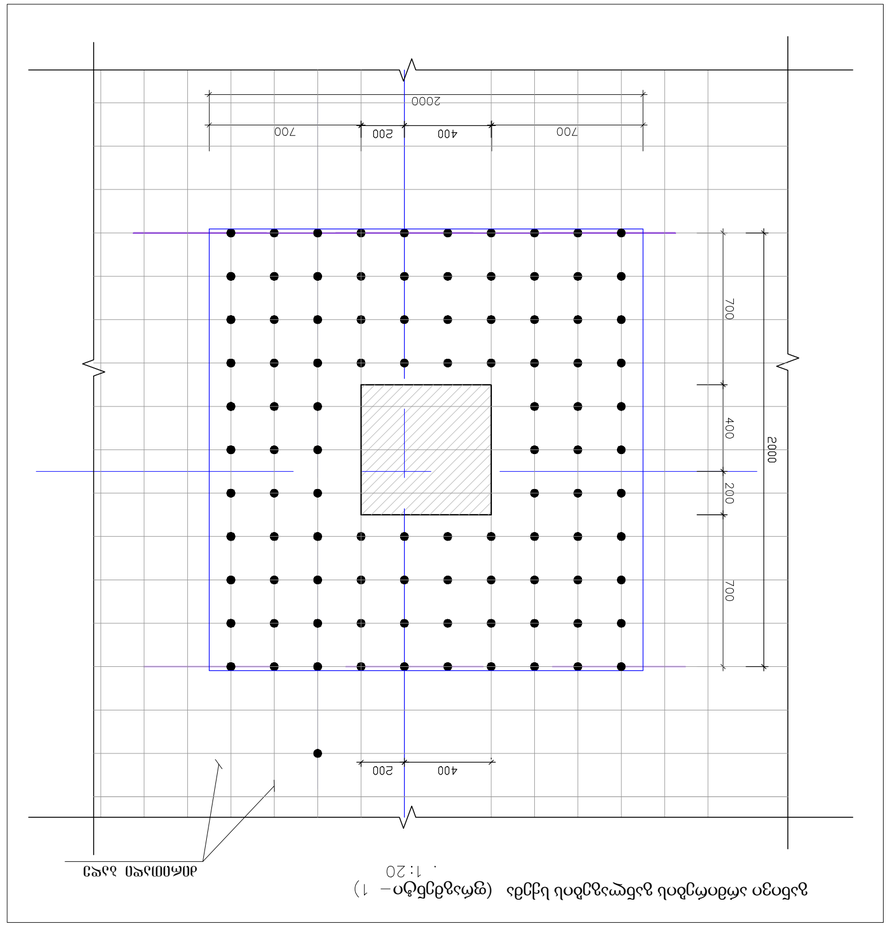


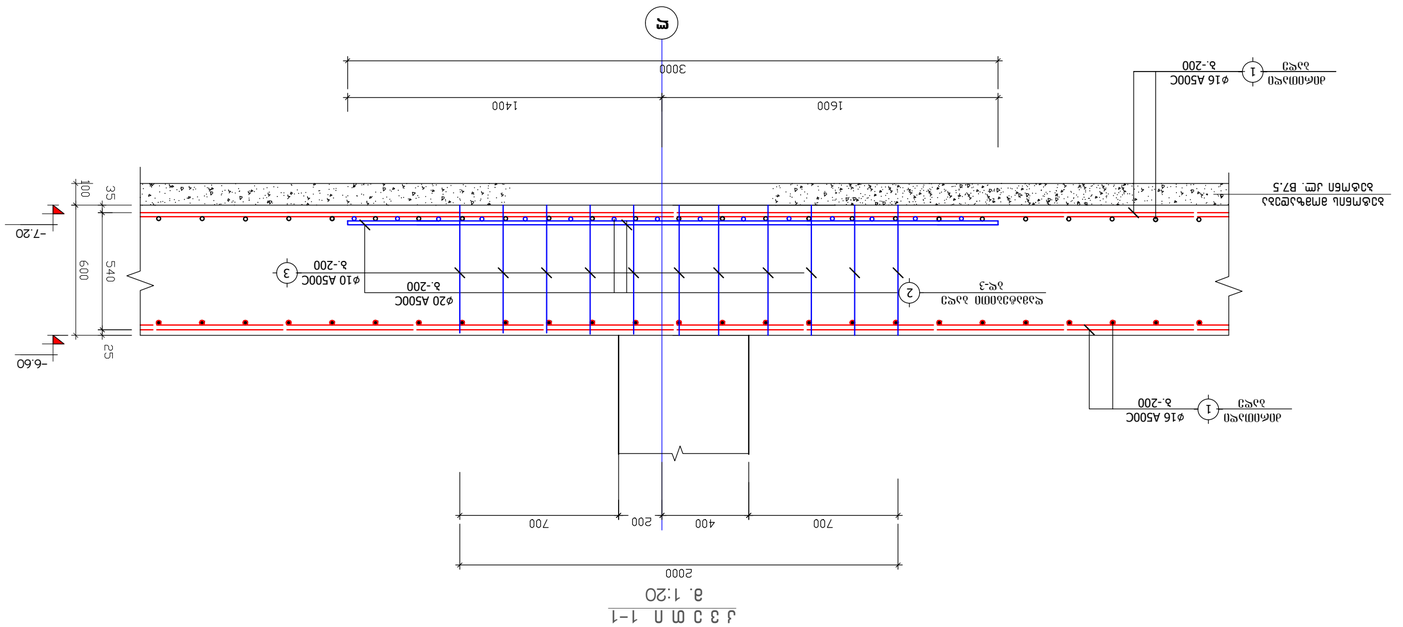


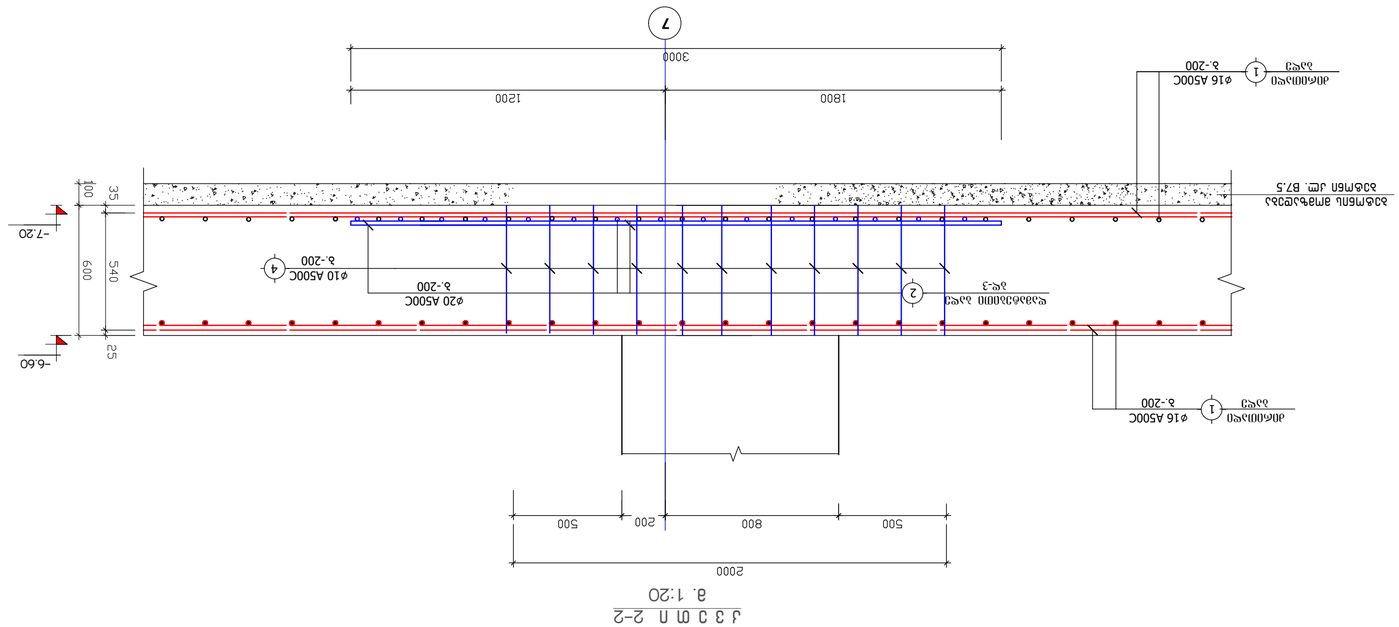


| | | | | |
|---|---|---|---|---|
| | | | | |
| | | | | |
| | | | | ჯ.პ.ლ. "ენერგოსისტემა" |
| ტექნიკური ზედამხედველი | | | | |
| ავტომატიზაციის განყოფილების უფროსი | | | | |
| | | ქ. თბილისი | | |
| | | | | |

| | | | | | |
|---|---|---|---|---|---|
| | | | | | |
| | | | | | |
| | | | | | |

## კვეთი 1-1
მ. 1:20

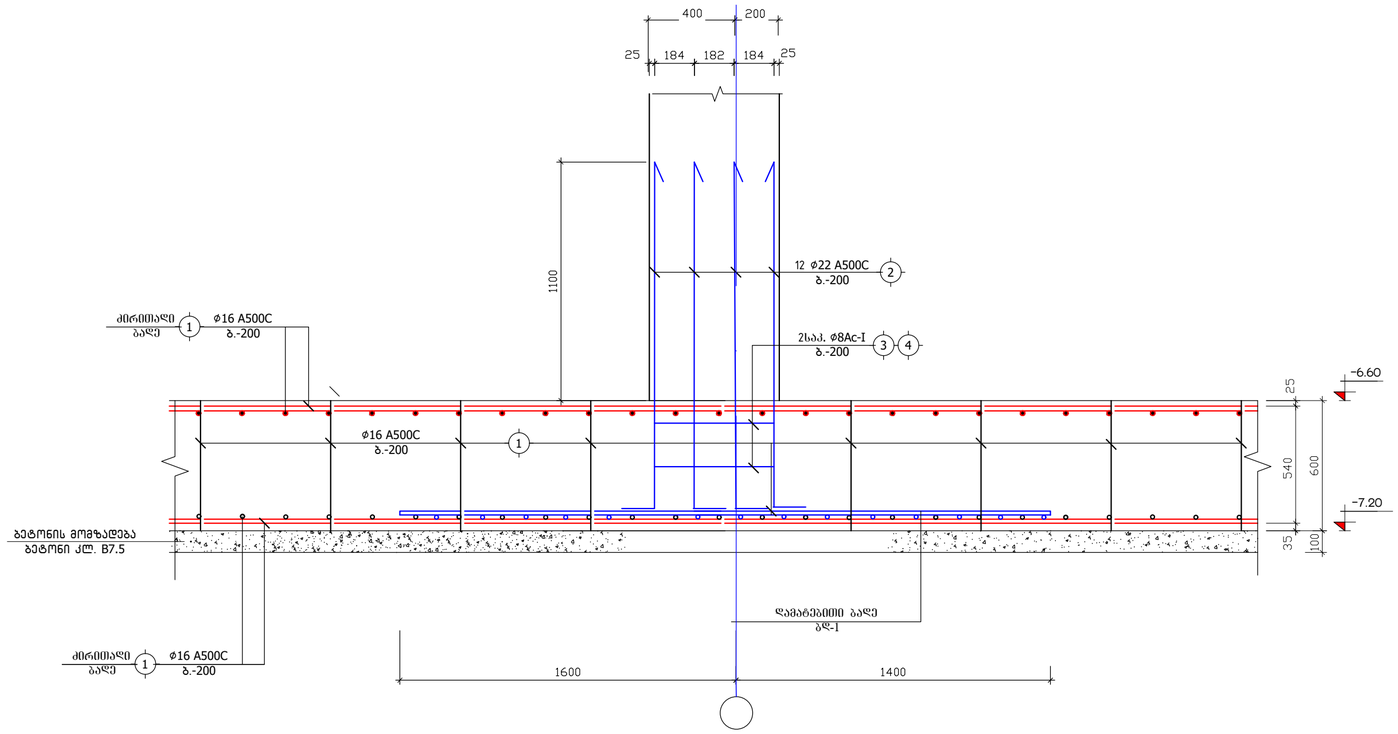


## კვეთი 3-3
მ:1:20

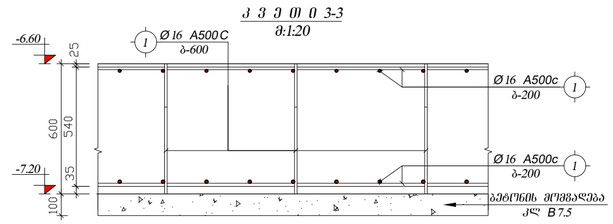


## კვეთი 2-2
მ. 1:20

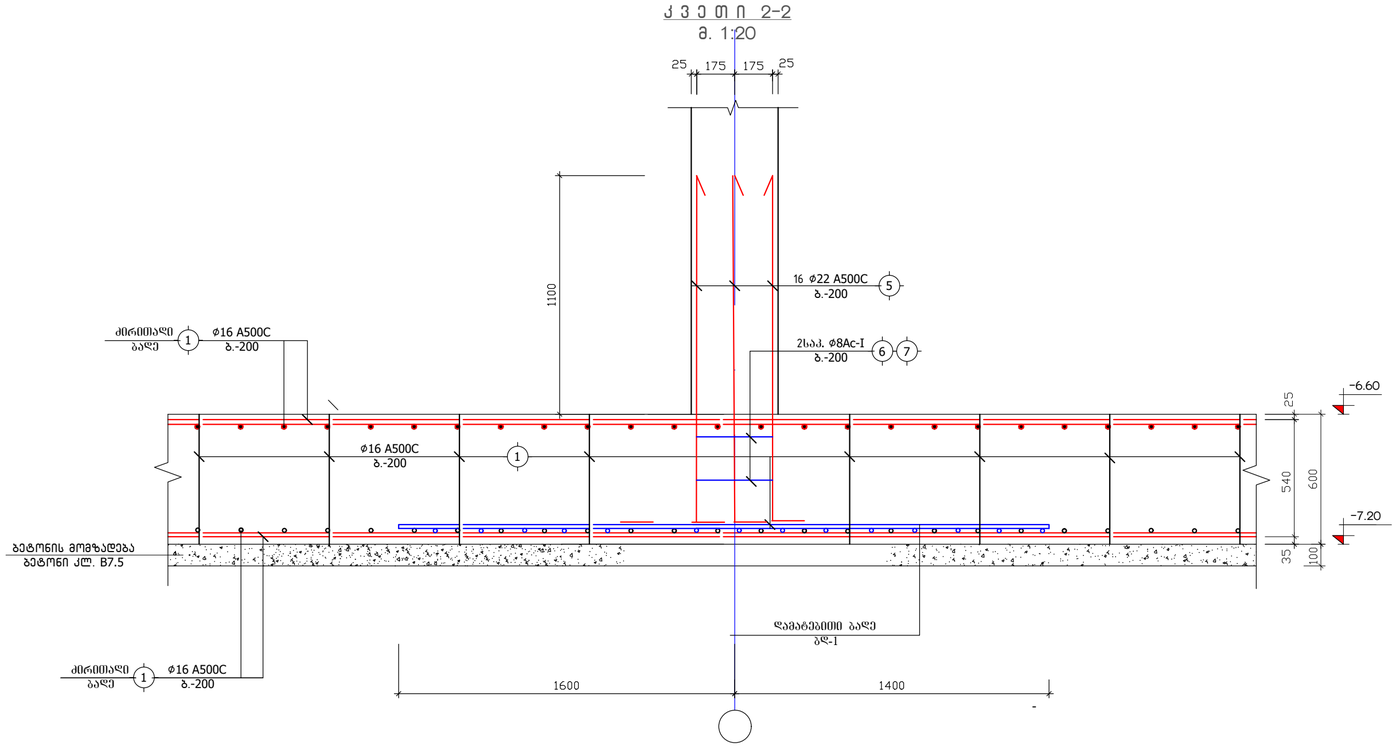


| | | | | | | | |
|---|---|---|---|---|---|---|---|
| თბილისის ბაღების წყნეთის შვილებილების №40-40ა ს/კ. 01.14.08.001.600 მრავალბინიანი სახლების პროექტი | | | | საძირკვლის ფილა. კვეთი 1-1, 2-2 და 3-3 | | | 2023 წ. |
| დირექტორი | ბ. იაშვილი | | | შეცვ. № | რაოდენ. | მასშტ. | დაკვ. № |
| | | | | კ -5 | - | 1:150 | |
| კონსტრუქტ. | ლორთქიფანიძე | | | დამკვეთი: | | | |
| | | | | შ.პ.ს. "მრწოლითი+" | | | |
| | | | | | | | |

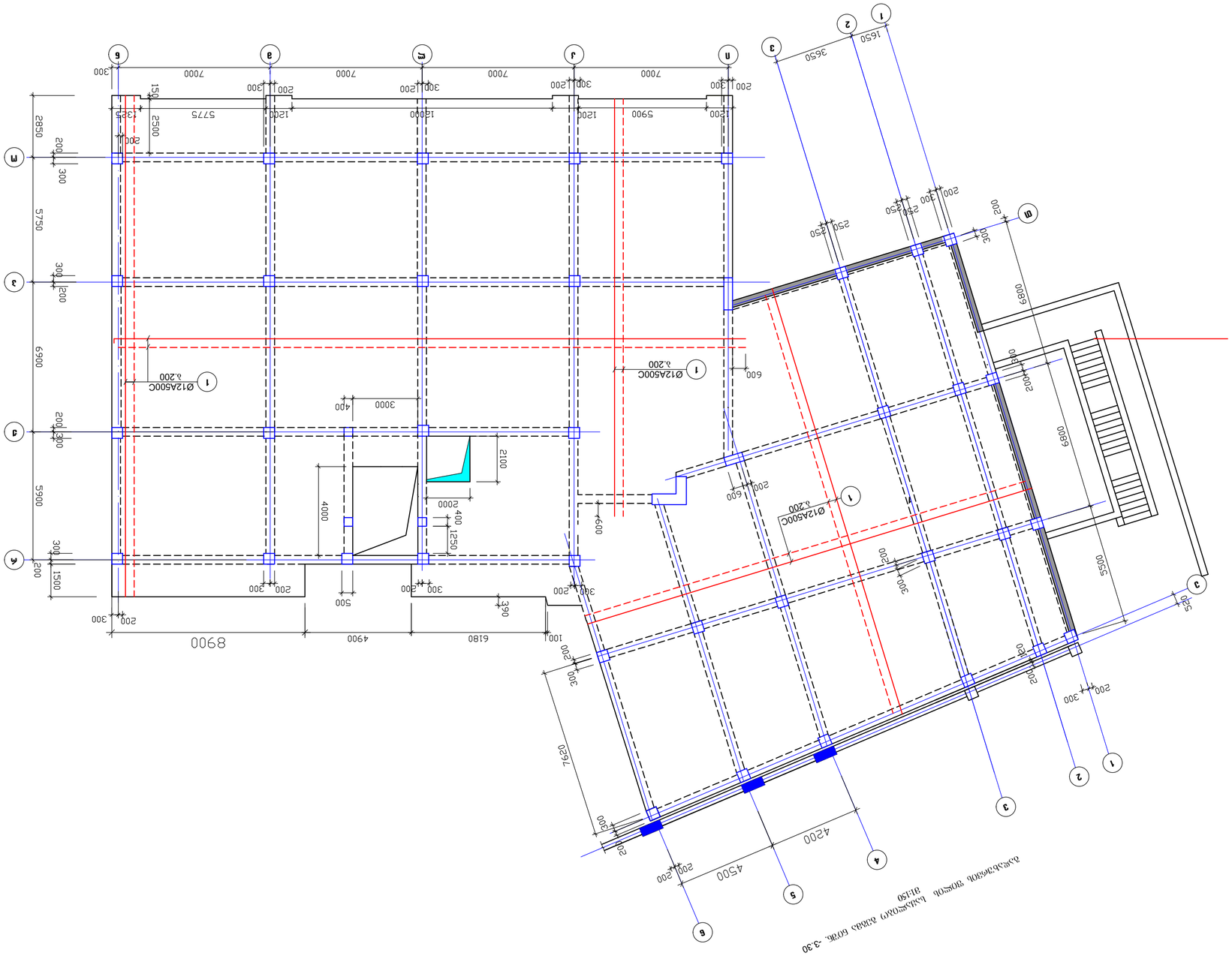


| | | | | | |
|---|---|---|---|---|---|
| | | | | | |
| | | | | | |
| ДГЧБЬФСЗФБ. | ССГЧСЛОЛПОЗЧЗЬОЗЛ | | | | |
| ЧОСЛЗФСГЧСЛО | Ъ. ЛОЗЗЭОССЧО | | | 1:150 | ЧЗЗЛ. № |
| | | | 4 -6 | | |
| | | | | | ЧЗЗЛЗЗЭЛЛЛ: |
| | | | | | З.Ъ. "ЗЛГЛГЧССЛЛЛ+" |

| | | |
|---|---|---|
| ЛЛЛЧЗЛЗЛЗЛЛЛ. ЗЗЗЗЭЛЛ. ЗЗЬЗЭЛЛЛЗЛЛЛЧЗЛЛ ЗЬЗЬЛЗЛЗЛЛЛЧЗЛЛ №40-403 | ЗЧЗЧЬЗГЗЛЛЛЛ ЗЗЧЗЛЛЛЗЛЛЛ ЗЛЛЛЛЗЛЛЛЛЗЛЛЛЛ

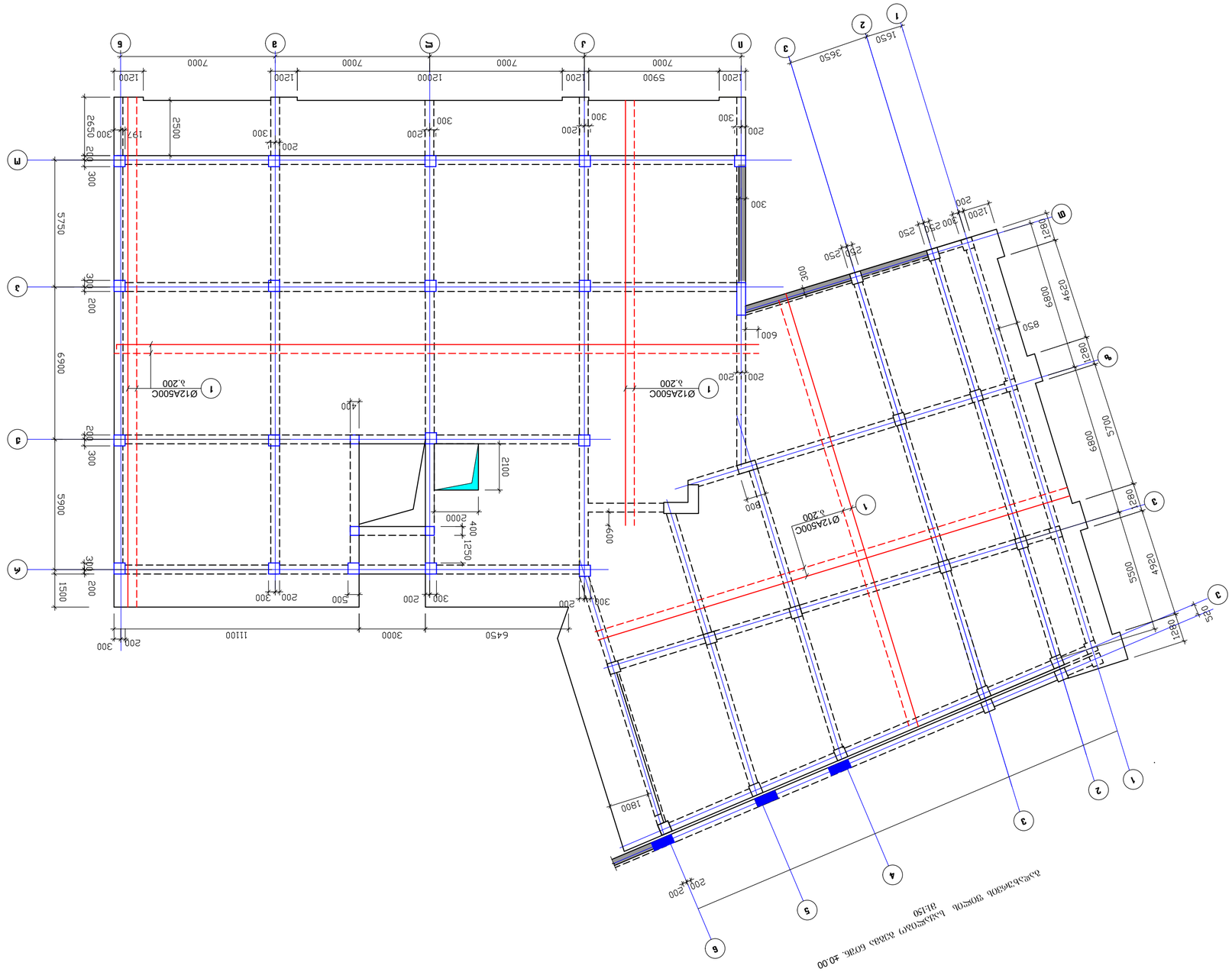
Ø12A500C
Ø12A500C
Ø12A500C

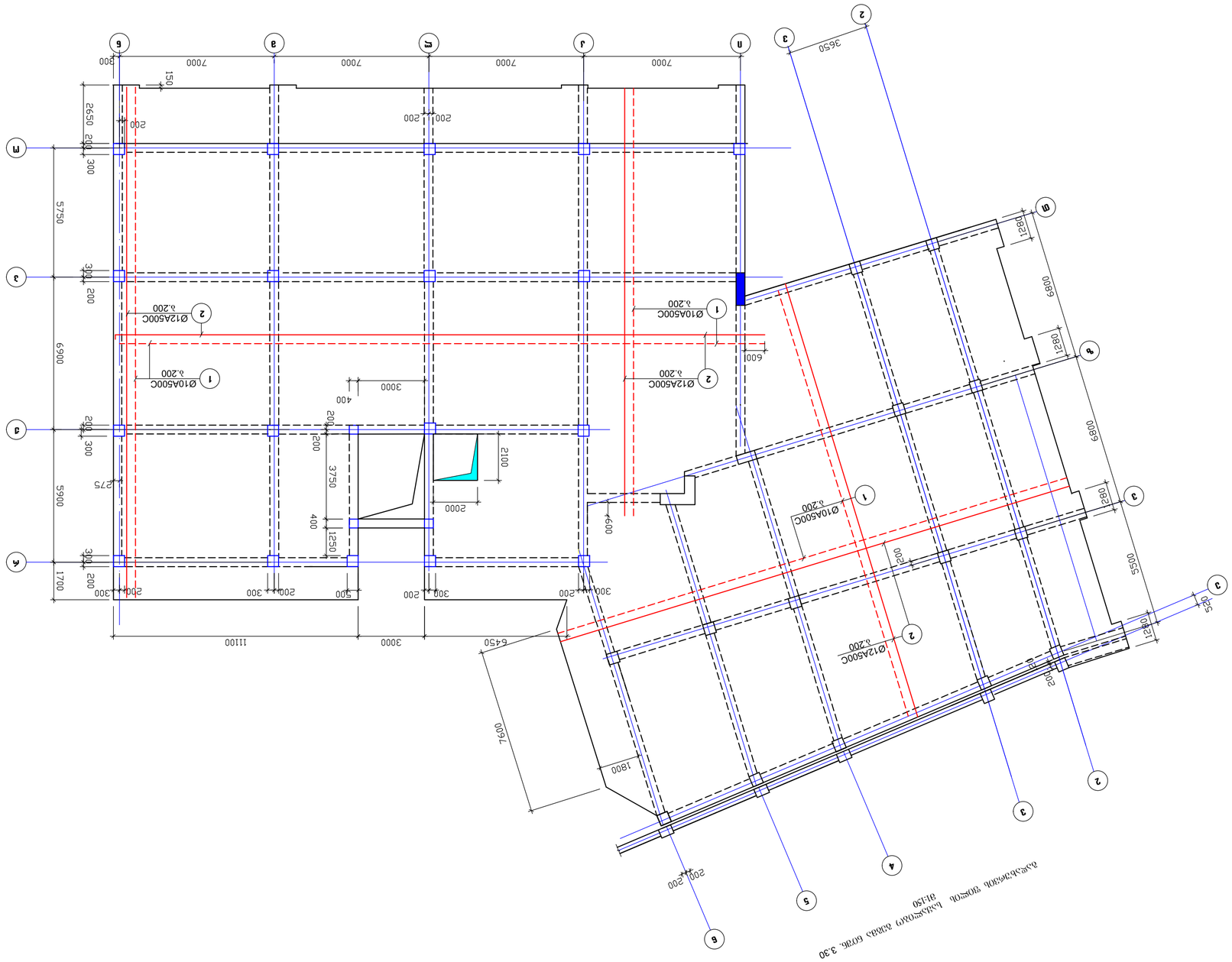
Ø10A500C
Ø12A500C
b.200
7000
11100
3000
6450
7600
1800
5750
5900
6900
3650
6800
5555
2650
1700
2100
3750
1250
2000
1200
1000
600
400
300
200
150
275
1821
1827
1121
1082
1002
1202
1200
1600
1400
1800
1600
1200
1200
1200

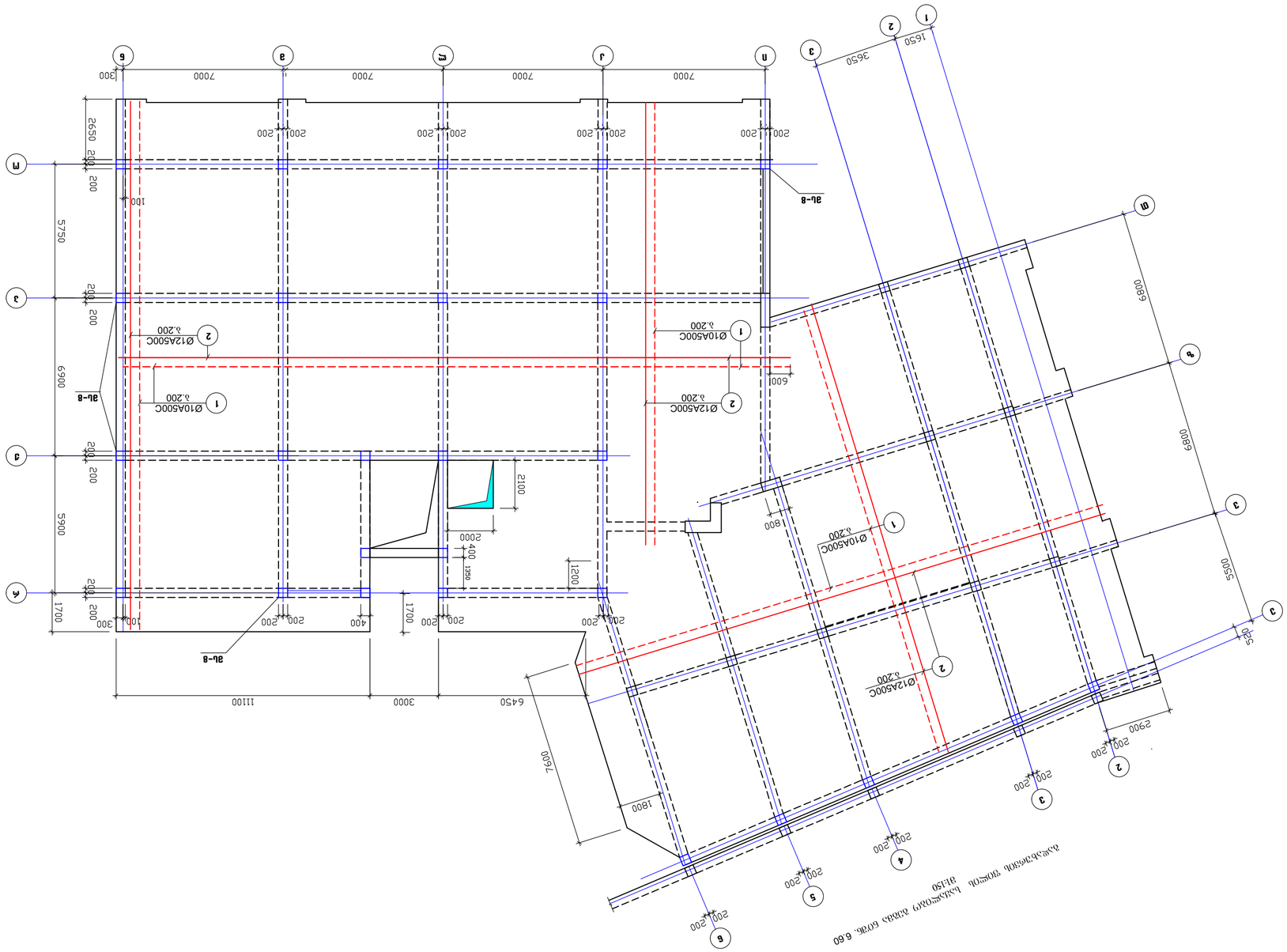


Вертикальная привязка здания. Разрез 1-1. 1:150

| | | | | | |
|---|---|---|---|---|---|
| Изм. Кол.уч. | Лист № док. | Подп. | Дата | 01.14.08.001600 ВОВ | Лист 2 |
| ГИП | Ковалев | | | Блок-секция №40-403 | |
| Н.контр. | Ковалев | | | | |
| Разраб. | Ковалев | | | | |

Многоэтажный жилой дом с объектами обслуживания населения, расположенный по адресу: г. Москва, ЮЗАО, район Обручевский, ул. Профсоюзная, вл. 40, корп. 403

Блок-секция

| Стадия | Лист | Листов |
|---|---|---|
| Р | 2 | |

Архитектурно-строительная часть

Вертикальная привязка здания. Разрез 1-1. 1:150

ГБУ «Мосгосэкспертиза»

Копировал

Формат А3

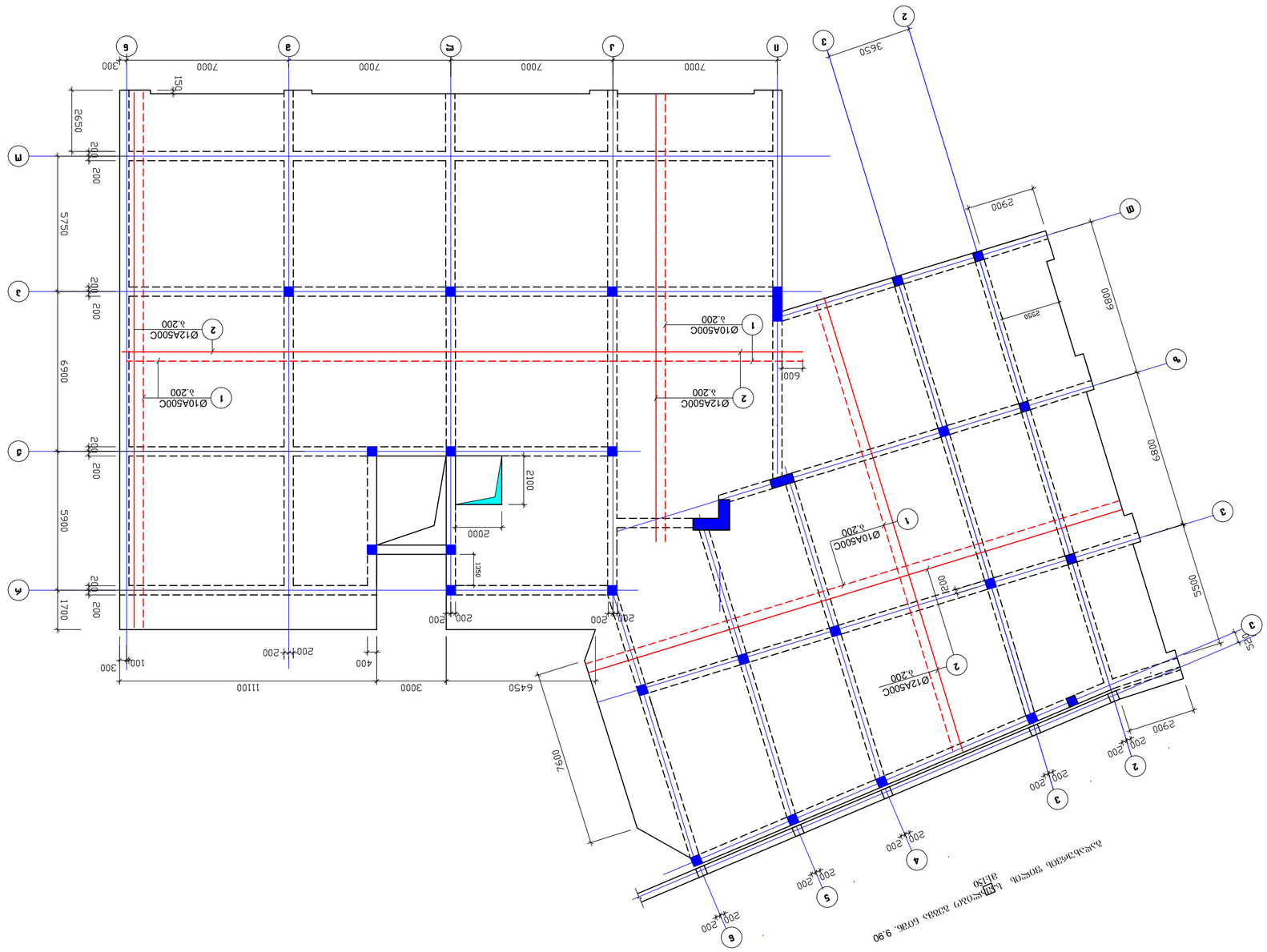


Вариант заделки монолитной плиты толщ. 9,90 в стену

| | | | | | | | |
|---|---|---|---|---|---|---|---|
| Изм. Кол.уч. | Лист | № док. | Подп. | Дата | 01.14.08.001600 ЭМ.ОВ.ВК | | |
| ГИП | Ефимов | | | | Многоквартирный дом №40-40А по ул. Зеленая в г. Ростов-на-Дону | | |
| Н.контр. | Ефимов | | | | Монолитная часть | | |
| Разраб. | Ефимов | | | | | Стадия | Лист | Листов |
| | | | | | | Р | 3 | |
| | | | | | | ООО "ЭЛИТ-ПРОЕКТ" | | |

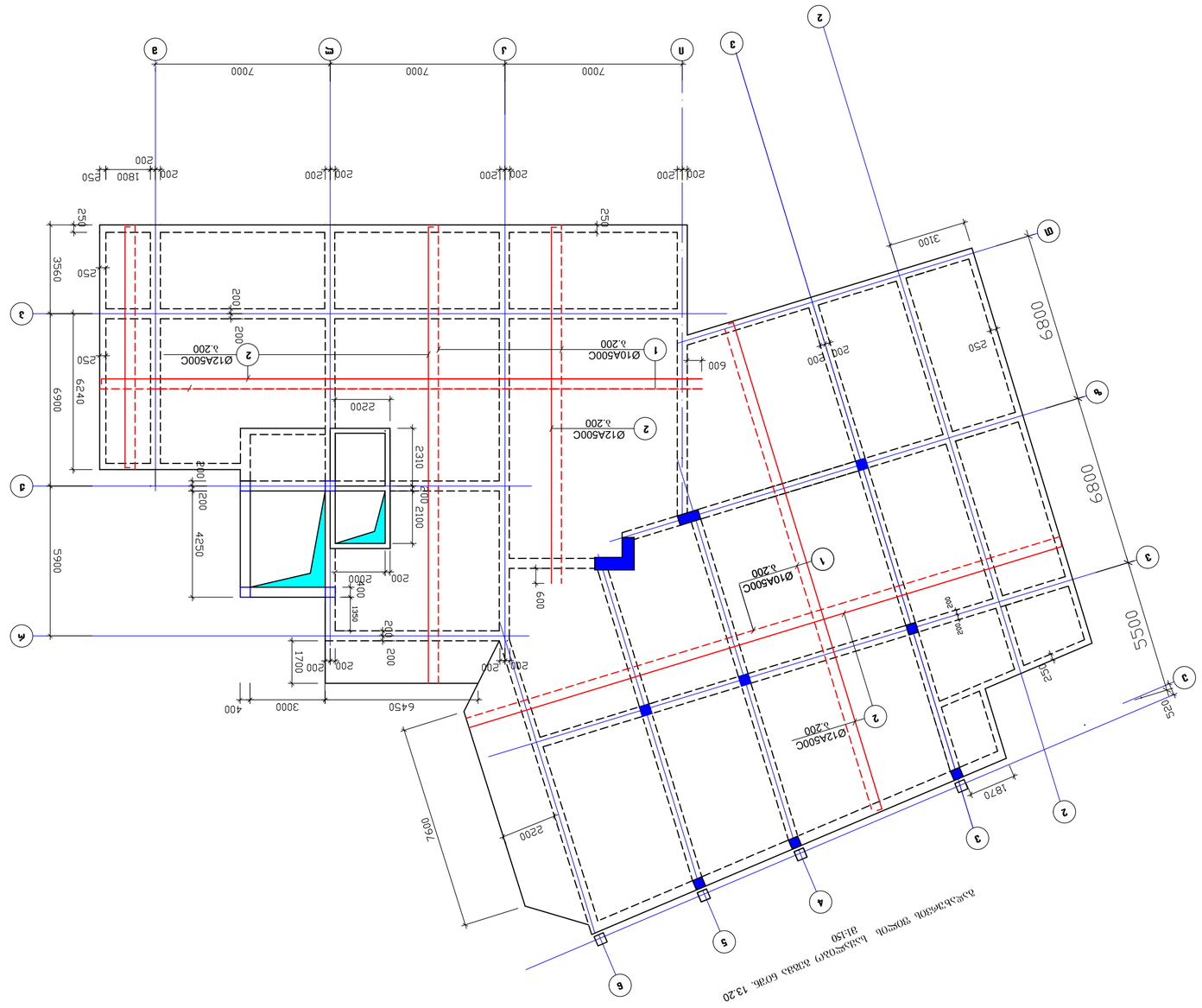
Ø10А500С
Ø12А500С
3100
6800
5500
7600
6450
3000
7000
2200
2310
2100
4250
5900
6240
6900
3560
1800
1350
1870
600
250
200

| | | | | | |
|---|---|---|---|---|---|
| | | | | | |
| | | | | | |
| | | | | | |

| | | | | | |
|---|---|---|---|---|---|
| | | | | | |
| | | | | | |
| | | | | | ვ.კ.ს. "ფრწყინვალე" |

| | | | | | |
|---|---|---|---|---|---|
| | | | | | |
| | | | | | |
| | | | | | |

გადახურვის ფილის საყალიბო გეგმა პანდუსის ჩვენებით ნიშნ. -3.30
მ1:150

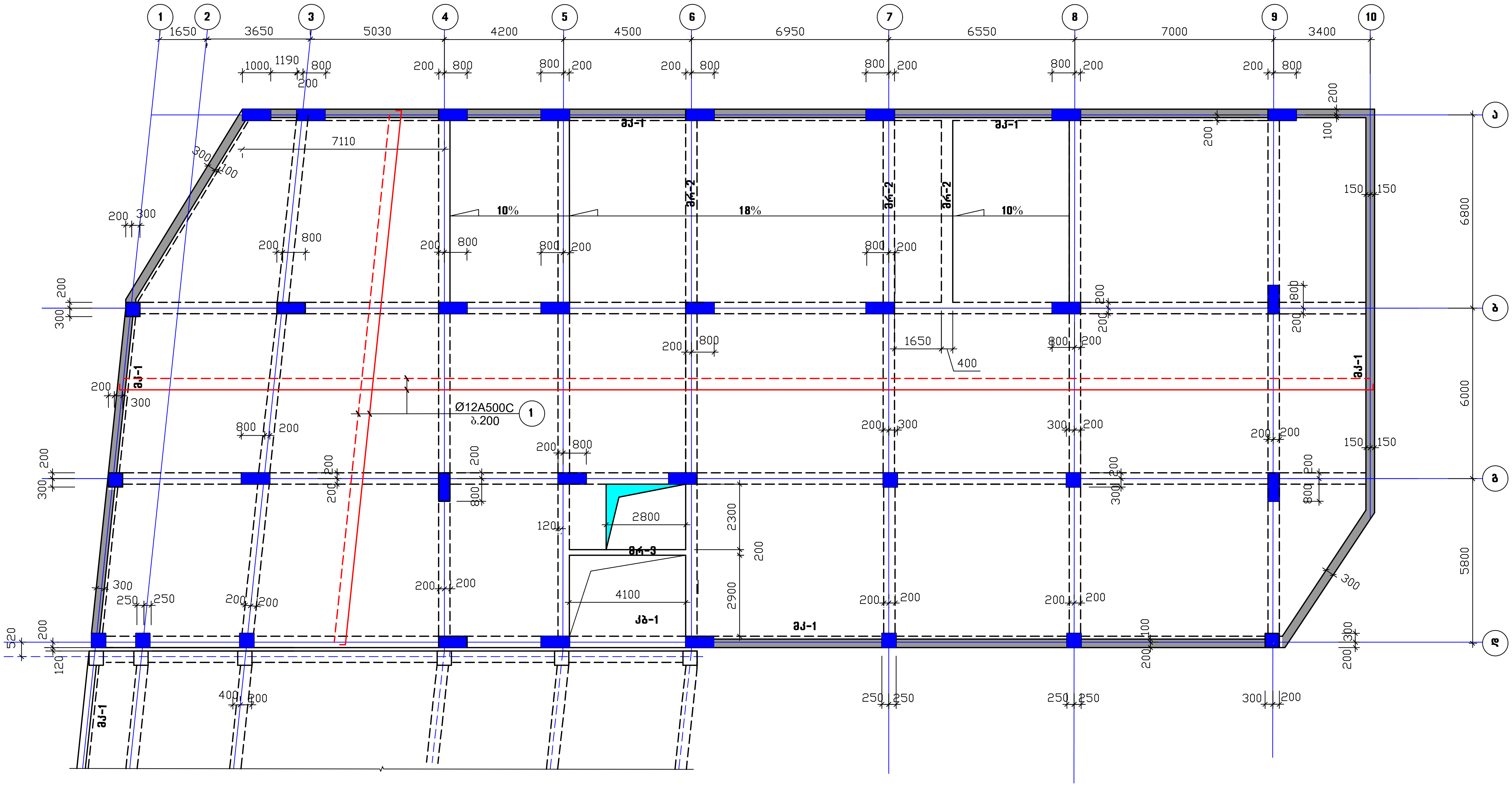


შენიშვნები:

1.მოცემული ფურც.იხ. კ-1 ფურც.ერთად.
2.ყველა დაუმარკავი რიგელი მრ-1-ია
.

| თბილისი. ბაგები. წყნეთის გზატკეცილის №40-40ა ს/კ. 01.14.08.001.600 მრავალბინიანი საცხოვრებელი სახლის პროექტი | | | | გადახურვის ფილის საყალიბო გეგმა პანდუსის ჩვენებით ნიშნ. -3.30 | | | 2023 წ. |
|---|---|---|---|---|---|---|---|
| დირექტორი | გ.იაშვილი | | | ფურც. № | რაოდენ. | მასშტ. | დაკვ. № |
| | | | | კ-13 | | 1:150 | |
| კონსტრუქტორი | ლორთქიფანიძე | | | დამკვეთი: | | | |
| | | | | შ.პ.ს. "მონოლითი+" | | | |
| | | | | | | | |

გადახურვის ფილის საყალიბო გეგმა პანდუსის ჩვენებით ნიშნ. 0.30
მ1:150

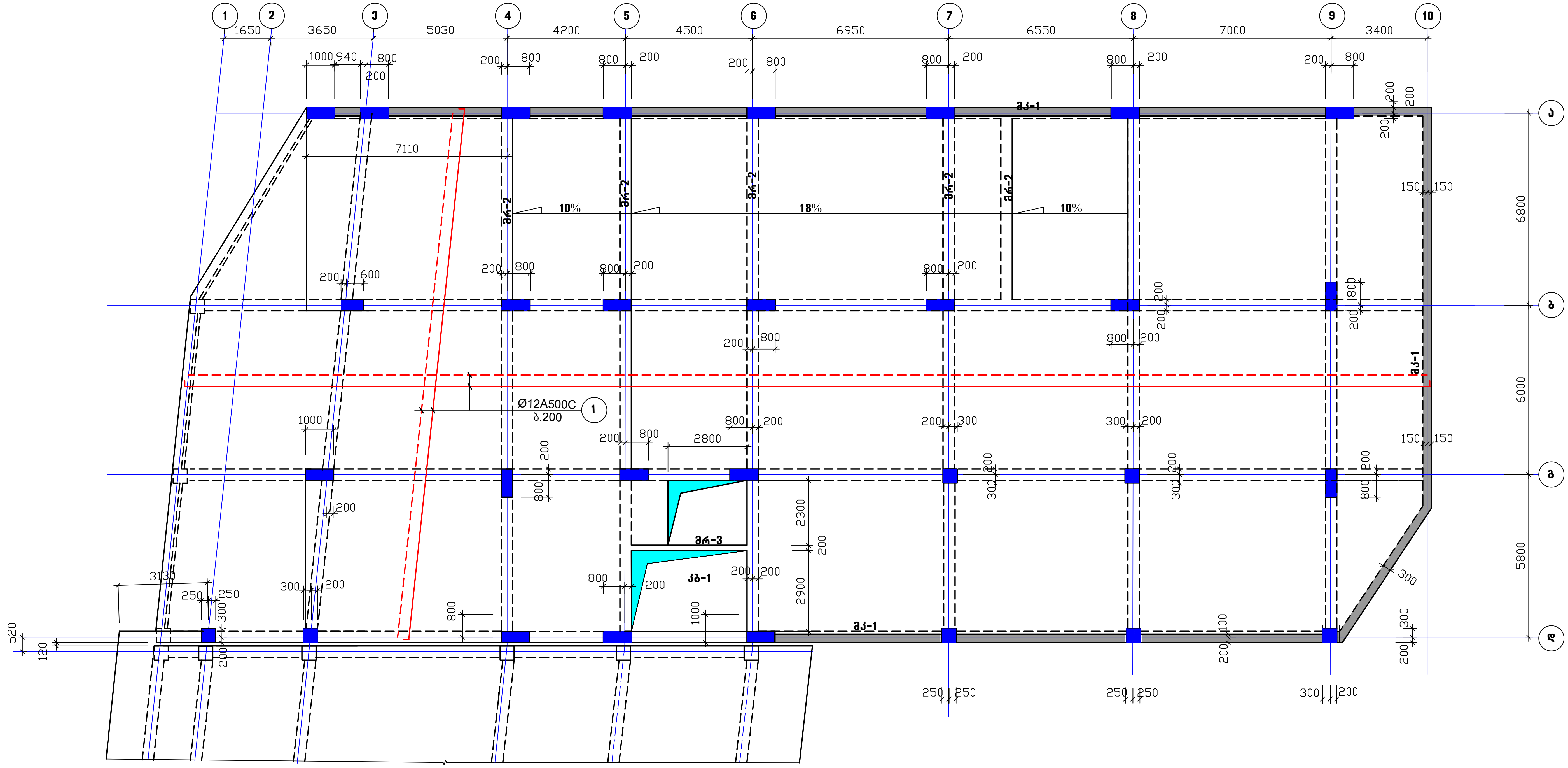


შენიშვნები:

1.მოცემული ფურც.იხ. კ-1 ფურც.ერთად.
2.ყველა დაუმარკავი რიგელი მრ-1-ია
.

| | | | | | | | |
|---|---|---|---|---|---|---|---|
| თბილისი. ბაგები. წყნეთის გზატკეცილის №40-40ა ს/კ. 01.14.08.001.600 მრავალბინიანი საცხოვრებელი სახლის პროექტი | | | | გადახურვის ფილის საყალიბო გეგმა პანდუსის ჩვენებით ნიშნ. 0.30 | | | 2023 წ. |
| დირექტორი | გ.იაშვილი | | | ფურც. № | რაოდენ. | მასშტ. | დაკვ. № |
| | | | | კ -14 | | 1:150 | |
| კონსტრუქტორი | ლორთქიფანიძე | | | დამკვეთი: | | | |
| | | | | შ.პ.ს. "მონოლითი+" | | | |
| | | | | | | | |

| | | | | | |
|---|---|---|---|---|---|
| | | | | | |
| | | | | | |
| | | | | | |

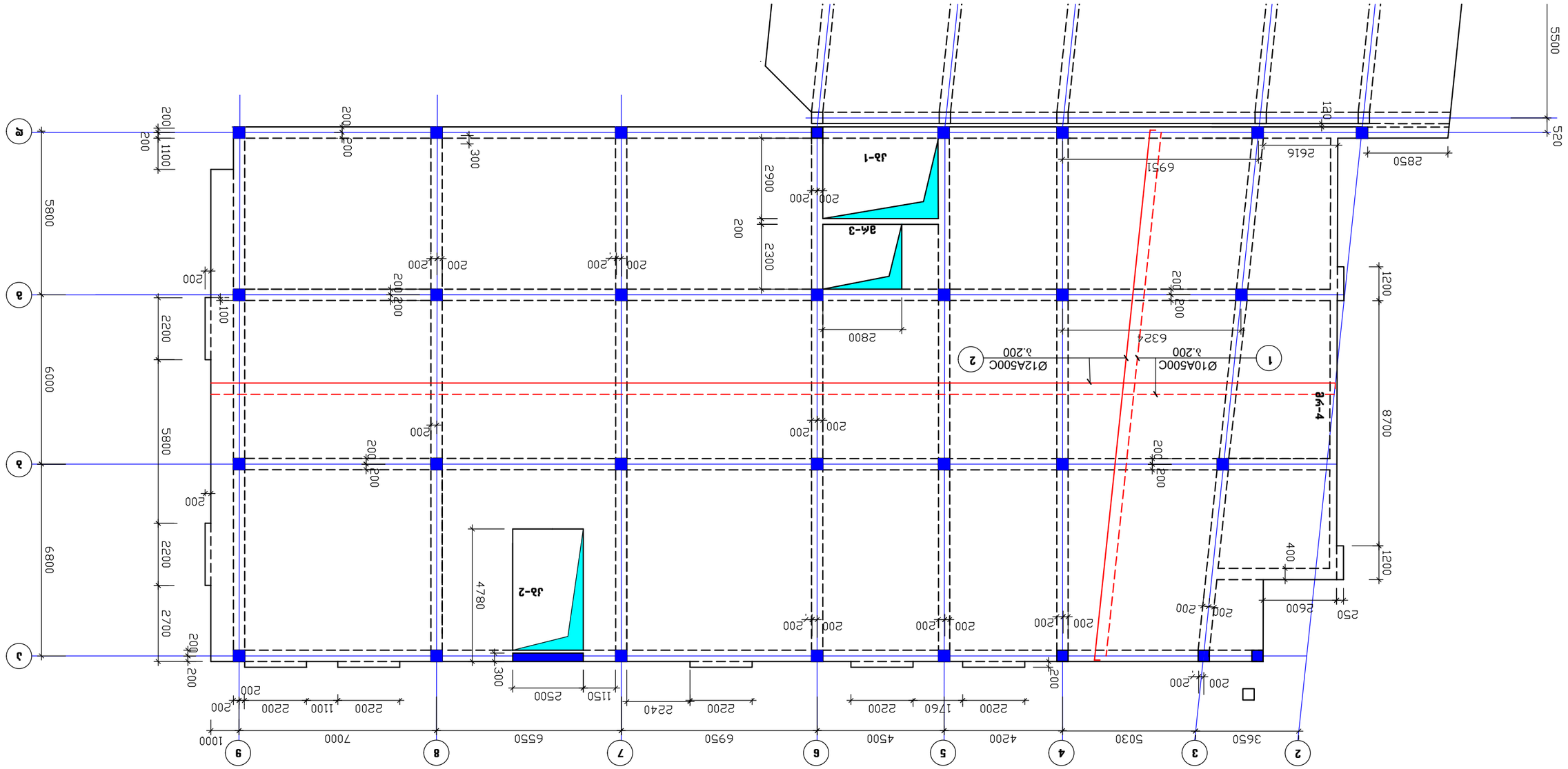


Экспликация помещений 1-этажа Блок-секция 6.60 Отм. 0.000 на 31.150

Примечания:

1. Все размеры даны в мм, если не указано иное.
2. Привязка осей к внутренним граням стен.
3. Толщина наружных стен 400 мм, внутренних 200 мм.
4. Перемычки по серии 1.038.1-1 вып. 1.

| Изм. | Кол.уч. | Лист | № док. | Подпись | Дата |
|---|---|---|---|---|---|
| Разработал | Иванов | | | | |
| Проверил | Петрова | | | | |
| Н.контр. | Сидоров | | | | |
| ГИП | Кузнецов | | | | |

Многоэтажный жилой дом по ул. Центральной, 40-40А в г. Светлогорске

Блок-секция 6.60

План 1-этажа. Отм. 0.000

Стадия: Р | Лист: 3 | Листов: 12

ООО «ПроектСтрой»

Инв. № подл. | Подпись и дата | Взам. инв. №

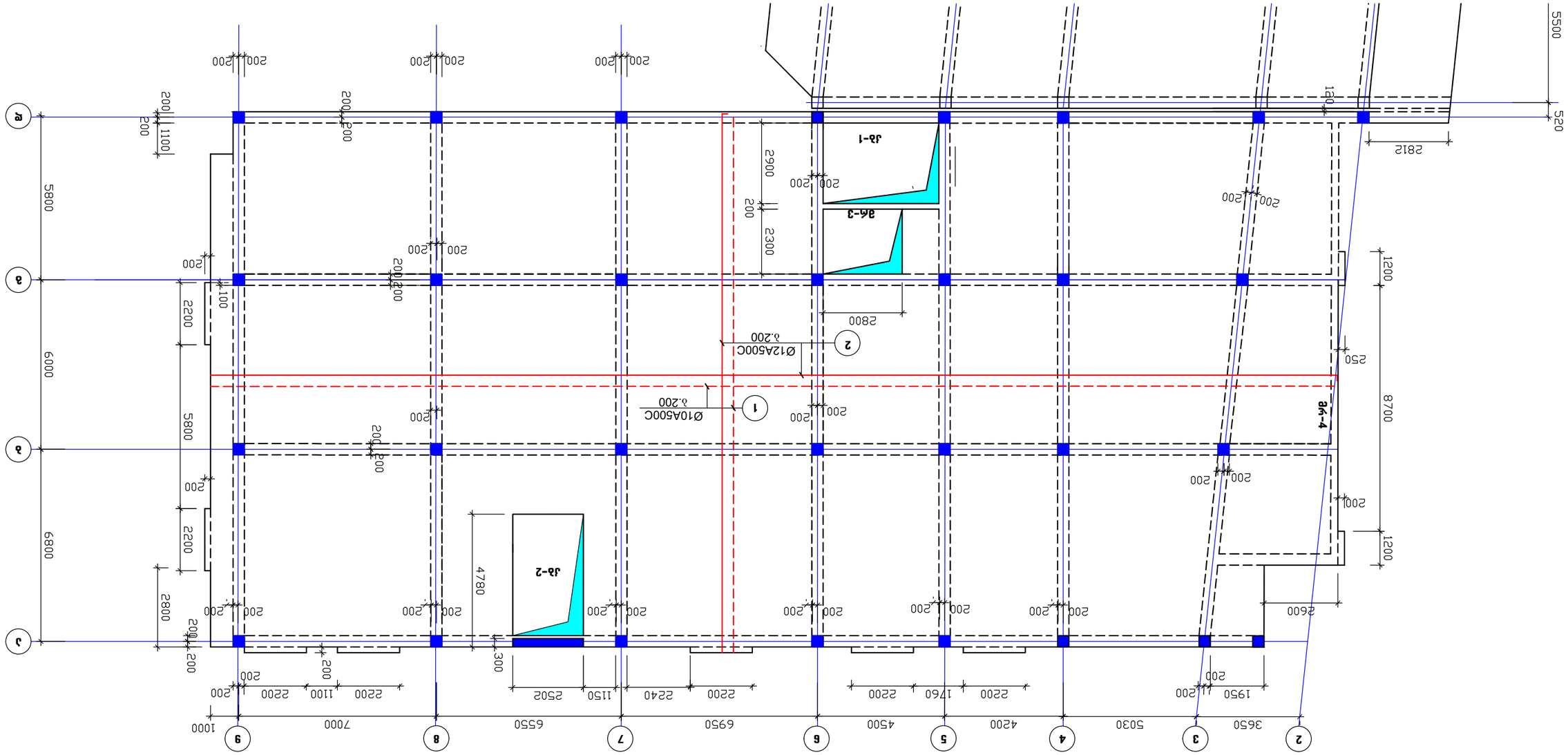
Ø12A500C
з.200
Ø10A500C
з.200
Ја-1
Ја-2
Ја-3
Ја-4
2
1
9
8
7
6
5
4
3
2
а
б
в
г
5500
520
2812
1200
250
8700
1200
2600
200
1950
200
3650
5030
4200
1760
2200
6950
6550
7000
1000
2502
1150
2240
2200
2200
1100
2200
200
2800
4780
2900
2300
200
5800
6000
6800
2200
1100
200
200
100
2200
200
200

## გადახურვის ფილის საყალიბო გეგმა ნიშნ. 13.20
მ1:150

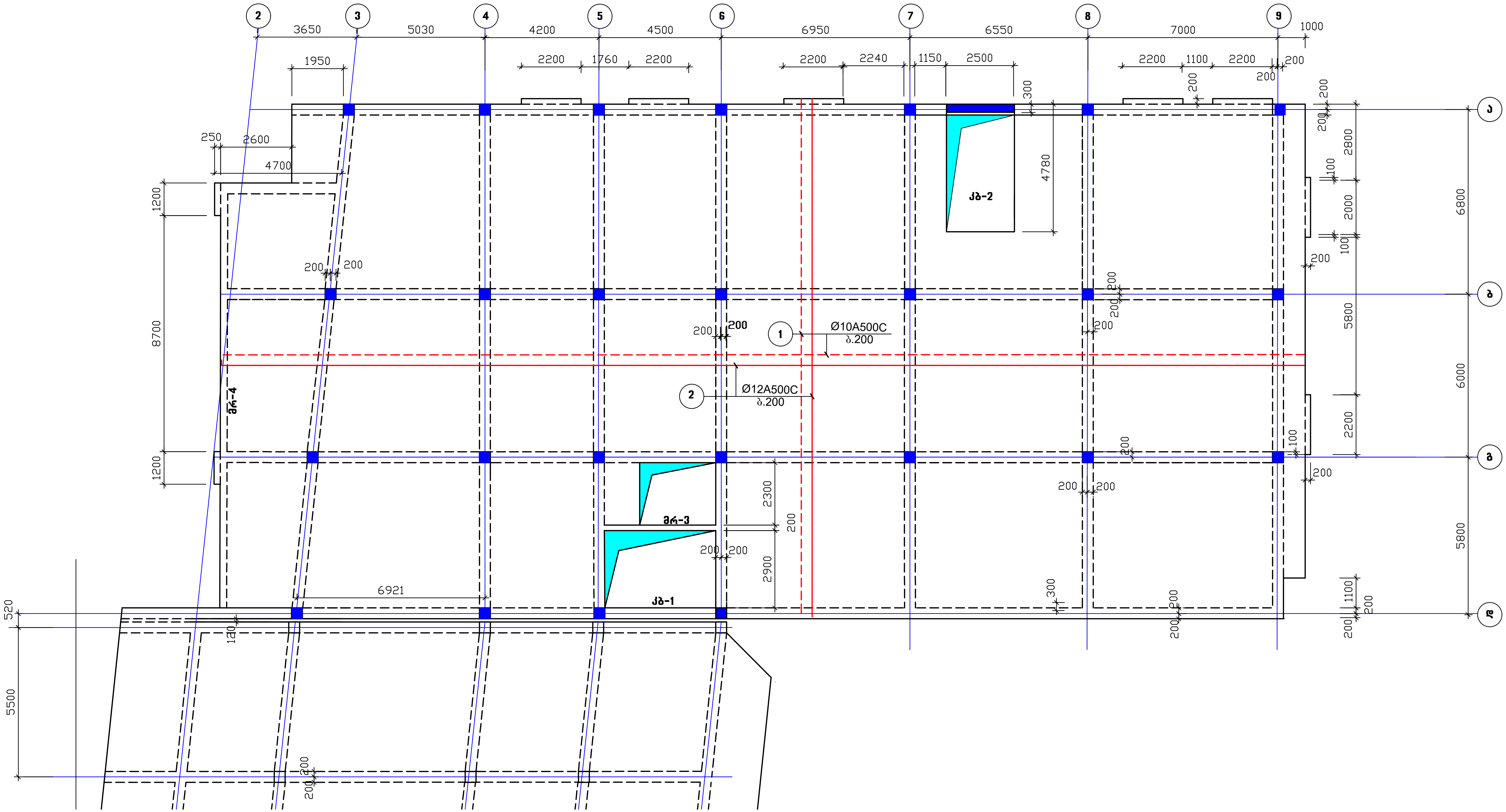


შენიშვნები:

1.ყველა დაუმარკავი რიგელი მრ-1-ია

| თბილისი. ბაგები. წყნეთის გზატკეცილის №40-40ა ს/კ. 01.14.08.001.600 მრავალბინიანი საცხოვრებელი სახლის პროექტი | | | | გადახურვის ფილის საყალიბო გეგმა ნიშნ. 13.20 | | | 2023 წ. |
|---|---|---|---|---|---|---|---|
| დირექტორი | გ.იაშვილი | | | ფურც. № | რაოდენ. | მასშტ. | დაკვ. № |
| | | | | კ -18 | | 1:150 | |
| კონსტრუქტორი | ლორთქიფანიძე | | | დამკვეთი: | | | |
| | | | | შ.პ.ს. "მონოლითი+" | | | |
| | | | | | | | |

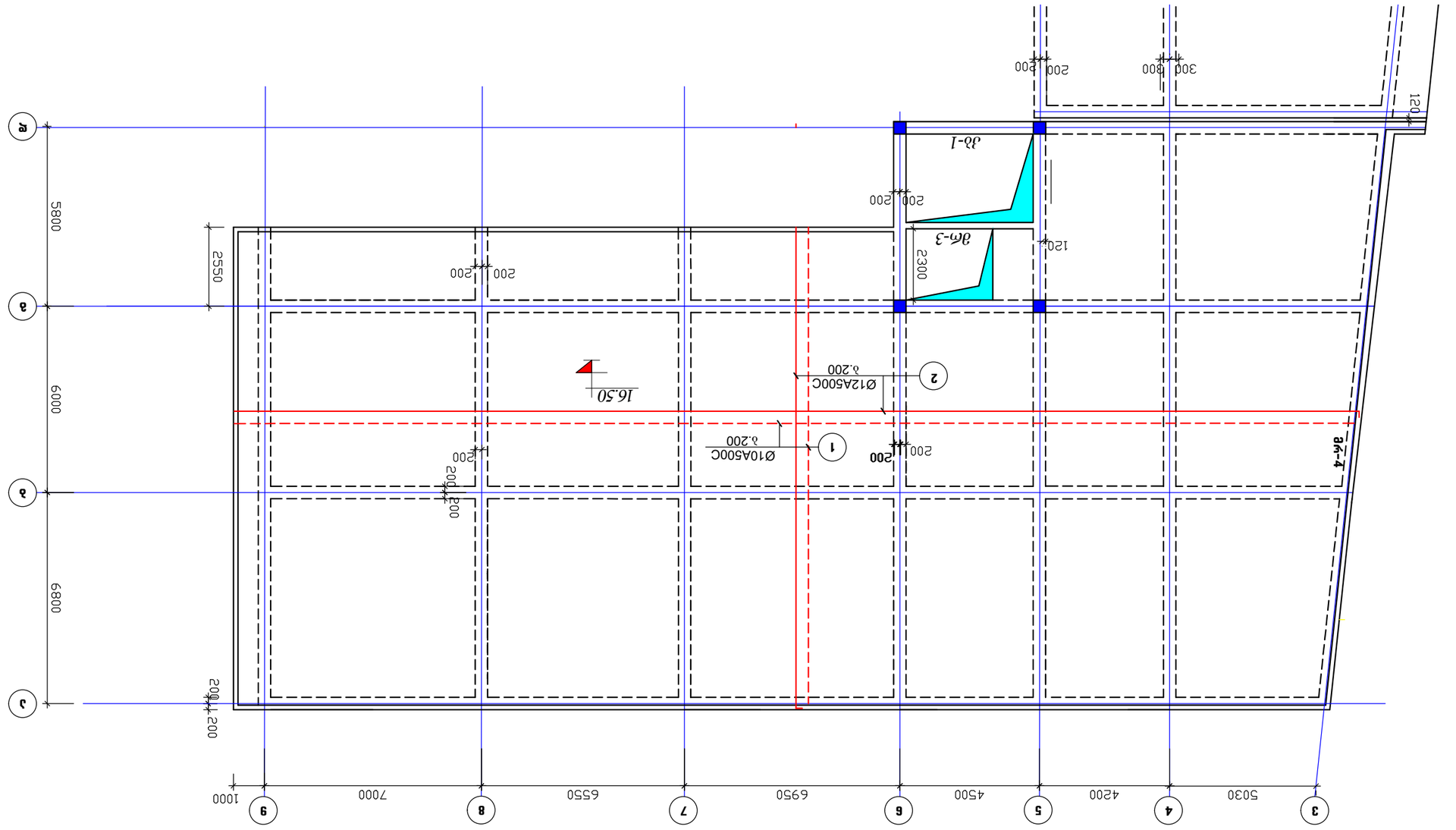


Экспликация полов 1этаж Бытовой корпус 16.50
Масштаб 1:150

| | | | | | | | |
|---|---|---|---|---|---|---|---|
| | | | | | | | |
| | | | | | | | |
| Изм. | Кол.уч. | Лист | № док. | Подпись | Дата | 3.Л. "ЭЛЕКТРОПРОМ" | |
| ГИП | Гончаренко | | | | | Экспликация полов | |
| | | | | | | Стадия | Лист | Листов |
| | | | | | | Р | 3 | |
| Н.контр. | Гончаренко | | | | | ООО "ЭЛЕКТРОПРОМ" | |

Технические требования:

1.Электроснабжение выполнить согласно ЭМ-1-ОВ

| | | | | | | | |
|---|---|---|---|---|---|---|---|
| Взам.инв.№ | | | | | | | |
| Подпись и дата | | | | | | | |
| Инв.№ подл. | Подпись | Дата | | | | | |

| | | | | | | | |
|---|---|---|---|---|---|---|---|
| | | | | | | | |
| | | | | | | | |
| Изм. | Кол.уч. | Лист | № док. | Подпись | Дата | | |
| ГИП | Гончаренко | | | | | Экспликация полов | |
| | | | | | | Стадия | Лист | Листов |
| | | | | | | Р | 3 | |
| Н.контр. | Гончаренко | | | | | ООО "ЭЛЕКТРОПРОМ" | |

Технические требования:

1.Электроснабжение выполнить согласно ЭМ-1-ОВ

| | | | | | | | |
|---|---|---|---|---|---|---|---|
| Взам.инв.№ | | | | | | | |
| Подпись и дата | | | | | | | |
| Инв.№ подл. | Подпись | Дата | | | | | |

| | | | | | | | |
|---|---|---|---|---|---|---|---|
| | | | | | | | |
| | | | | | | | |
| Изм. | Кол.уч. | Лист | № док. | Подпись | Дата | | |
| ГИП | Гончаренко | | | | | Экспликация полов | |
| | | | | | | Стадия | Лист | Листов |
| | | | | | | Р | 3 | |
| Н.контр. | Гончаренко | | | | | ООО "ЭЛЕКТРОПРОМ" | |

Технические требования:

1.Электроснабжение выполнить согласно ЭМ-1-ОВ

| | | | | | | | |
|---|---|---|---|---|---|---|---|
| Взам.инв.№ | | | | | | | |
| Подпись и дата | | | | | | | |
| Инв.№ подл. | Подпись | Дата | | | | | |

# გადახურვის ფილის საყალიბო გეგმა ნიშნ. 19.140

მ1:150

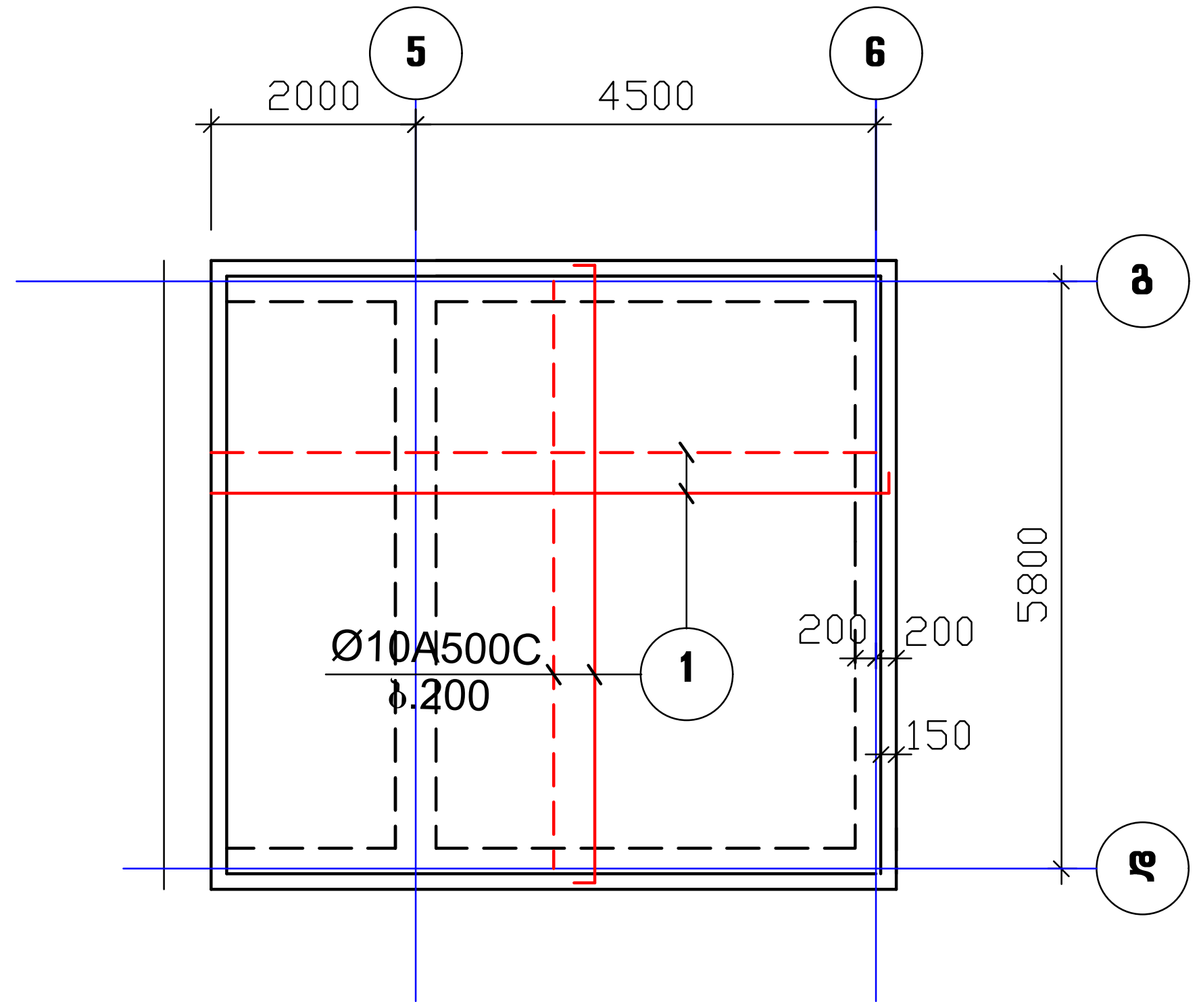


შენიშვნები:

1.მოცემული ფურც.იხ. კ-1 ფურც.ერთად.

| | | | | | | | |
|---|---|---|---|---|---|---|---|
| თბილისი. ბაგები. წყნეთის გზატკეცილის №40-40ა ს/კ. 01.14.08.001.600 მრავალბინიანი საცხოვრებელი სახლის პროექტი | | | | გადახურვის ფილის საყალიბო გეგმა ნიშნ. 19.140 | | | 2023 წ. |
| დირექტორი | გ.იაშვილი | | | ფურც. № | რაოდენ. | მასშტ. | დაკვ. № |
| | | | | კ -20 | | 1:150 | |
| კონსტრუქტორი | ლორთქიფანიძე | | | დამკვეთი: | | | |
| | | | | შ.პ.ს. "მონოლითი+" | | | |
| | | | | | | | |

| | | | | | |
|---|---|---|---|---|---|
| | | | | | |
| | | | | | |
| Дата. Подпись. Инв. № подл. | Взам. инв. № | | Подпись и дата | Инв. № подл. | |

| | | | | | |
|---|---|---|---|---|---|
| Изм. | Кол. уч. | Лист | № док. | Подпись | Дата |
| ГИП | Ефимов | | Ефимов | | |
| Н. контр. | Ефимов | | Ефимов | | |
| Разработал | Ефимов | | Ефимов | | |

Многоквартирный дом №40-40а по ул. Бульварная в районе Центральный г. Оренбург

Многоквартирный дом с автономными системами инженерного обеспечения

Ведомость отделки фасадов

Стадия: Р | Лист: 1 | Листов: 1

ООО "Архитектурная мастерская "Ренессанс"

Ведомость отделки фасадов

Масштаб 1:150

| | | | | | |
|---|---|---|---|---|---|
| | | | | | |
| | | | | | |
| | | | | | |

Фрагмент "Б" стены лестничной клетки №1
1:50

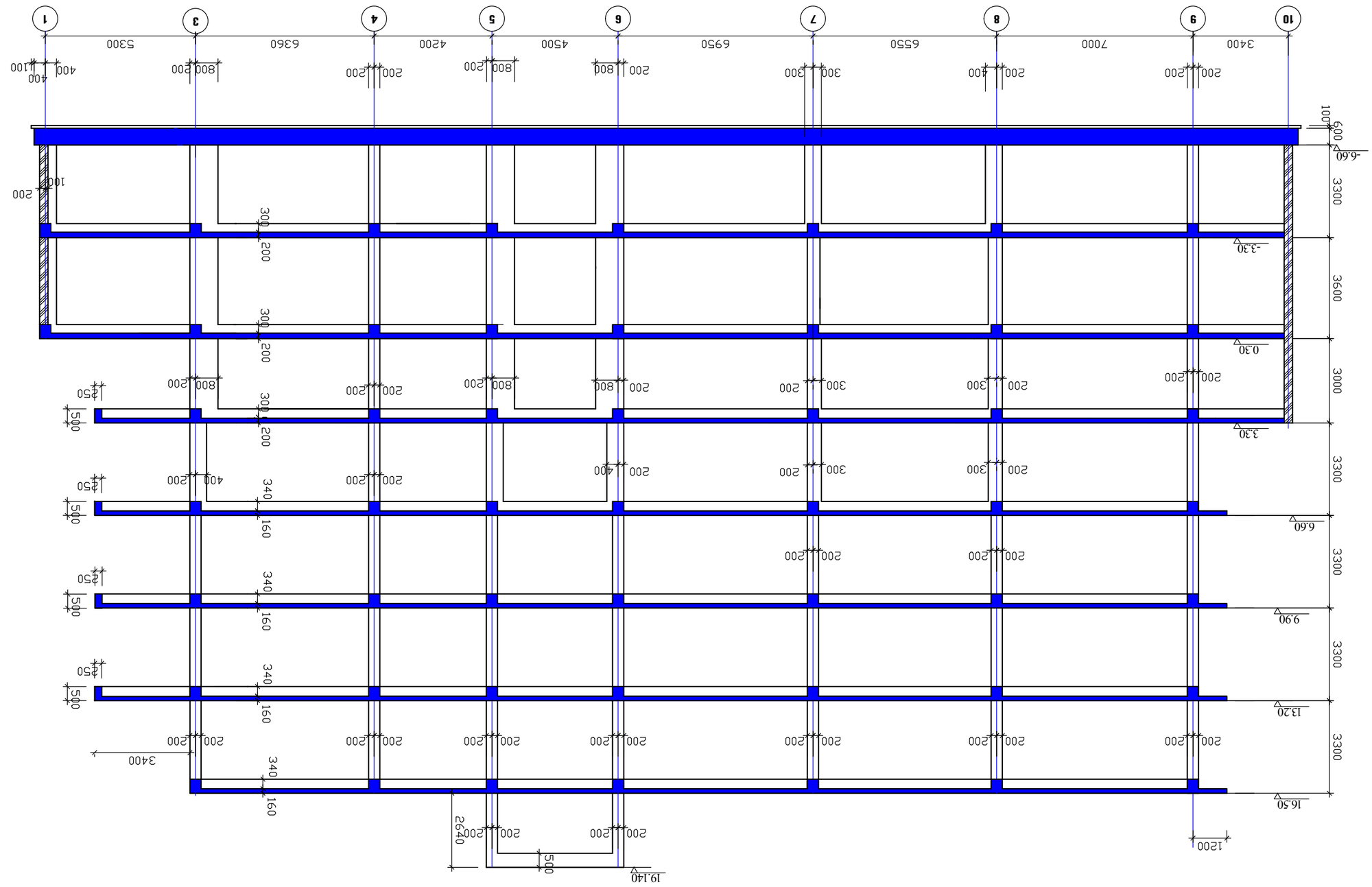


| | | | | | | | |
|---|---|---|---|---|---|---|---|
| Изм. | Кол.уч. | Лист | № док. | Подп. | Дата | 01.14.08.001.600 ЭМ.ОВ.ВК | |
| ГИП | Ковалёв | | | | | Блок "Г" с подвалом. Блок 2 | Стадия Лист Листов |
| Н.контр. | Ковалёв | | | | | | Р 1 |
| Разраб. | Ковалёв | | | | | | ООО "ЭМПЛЕКС" |

Блок "Г" с подвалом. Блок 2
Стадия Р
Лист 1
Листов 1
ООО "ЭМПЛЕКС"

Инв.№ подл. | Подп. и дата | Взам.инв.№

01.14.08.001.600 ЭМ.ОВ.ВК Блок "Г" с подвалом. Блок 2. Блок №40-40а. Блок 2. Блок 2. Блок 2

Спецификация на монтажные элементы и ведомость расхода стали
31:150

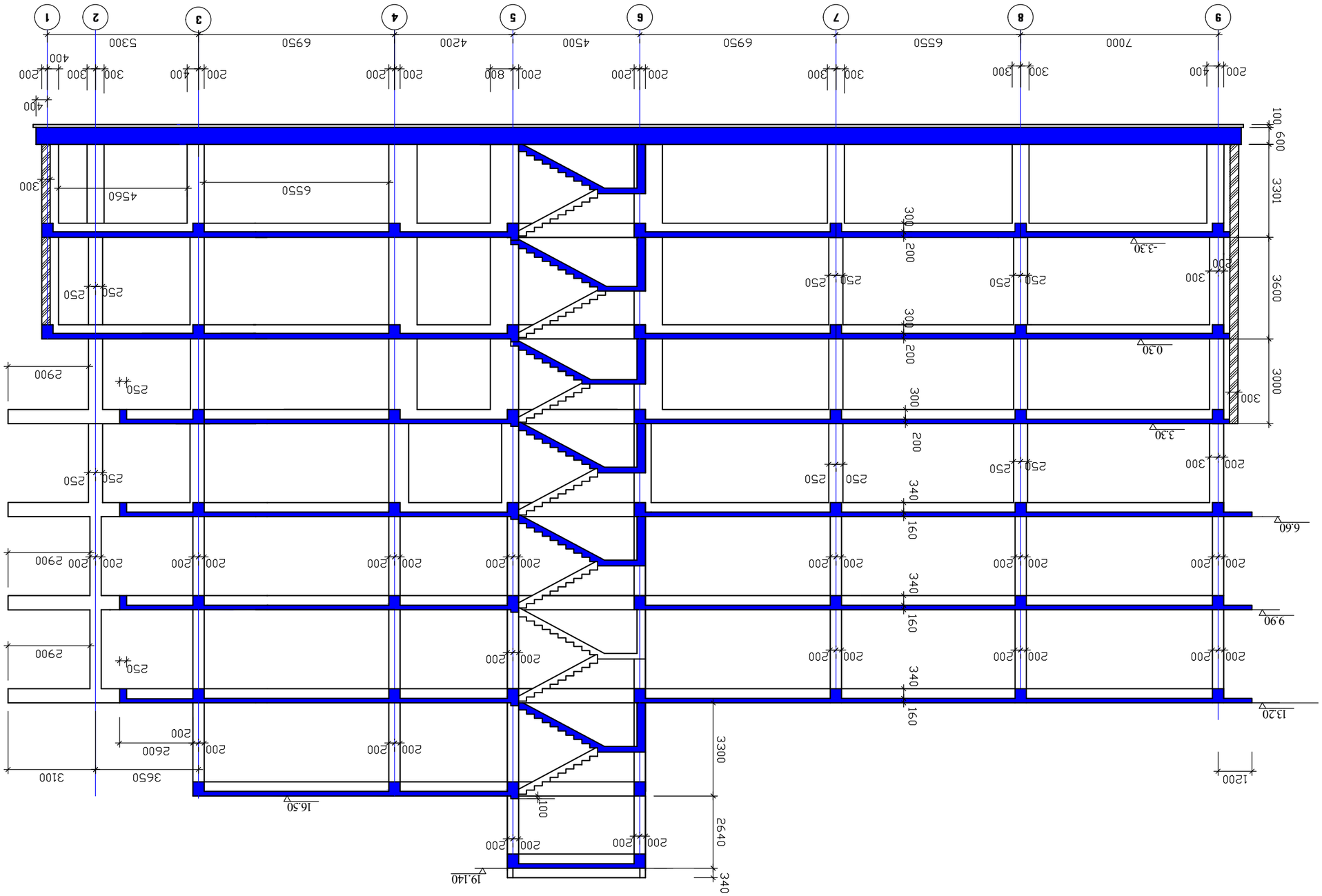


| | | | | | |
|---|---|---|---|---|---|
| Изм. | Кол.уч. | Лист | № док. | Подп. | Дата |
| Разработал | Иванов | | | | |
| Проверил | Петров | | | | |
| Н. контр. | Сидоров | | | | |
| ГИП | Кузнецов | | | | |

Многоэтажное здание. Блок-секция. Монтажная схема. Узлы и детали. Лист 40-40а

Шифр 01.14.08.001.600 ЖБК-ВК

Жилой дом №2

Стадия | Лист | Листов

Р | 1 | 1

ООО «Проектстройсервис»

Копировал

Формат А1

სვეტი მს-5 (4 ცალი)
მ1:100

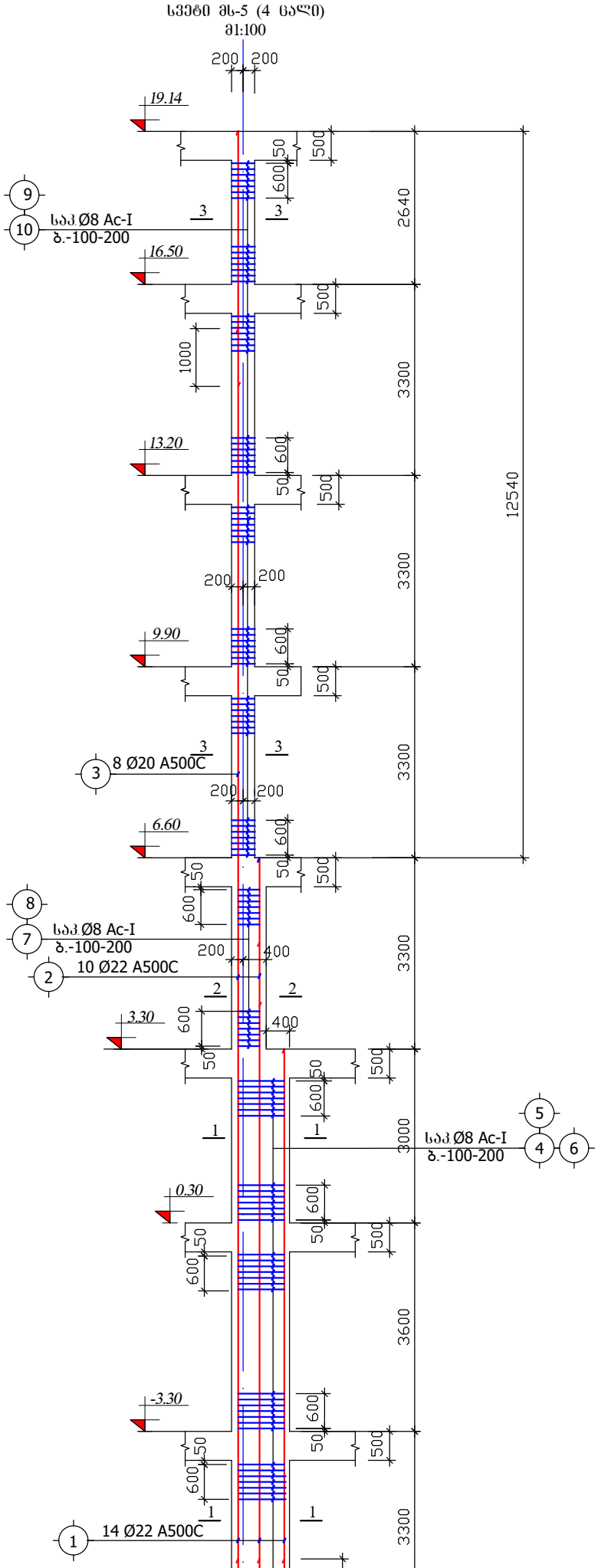


სვეტი მს-4 (18 ცალი)
მ1:100

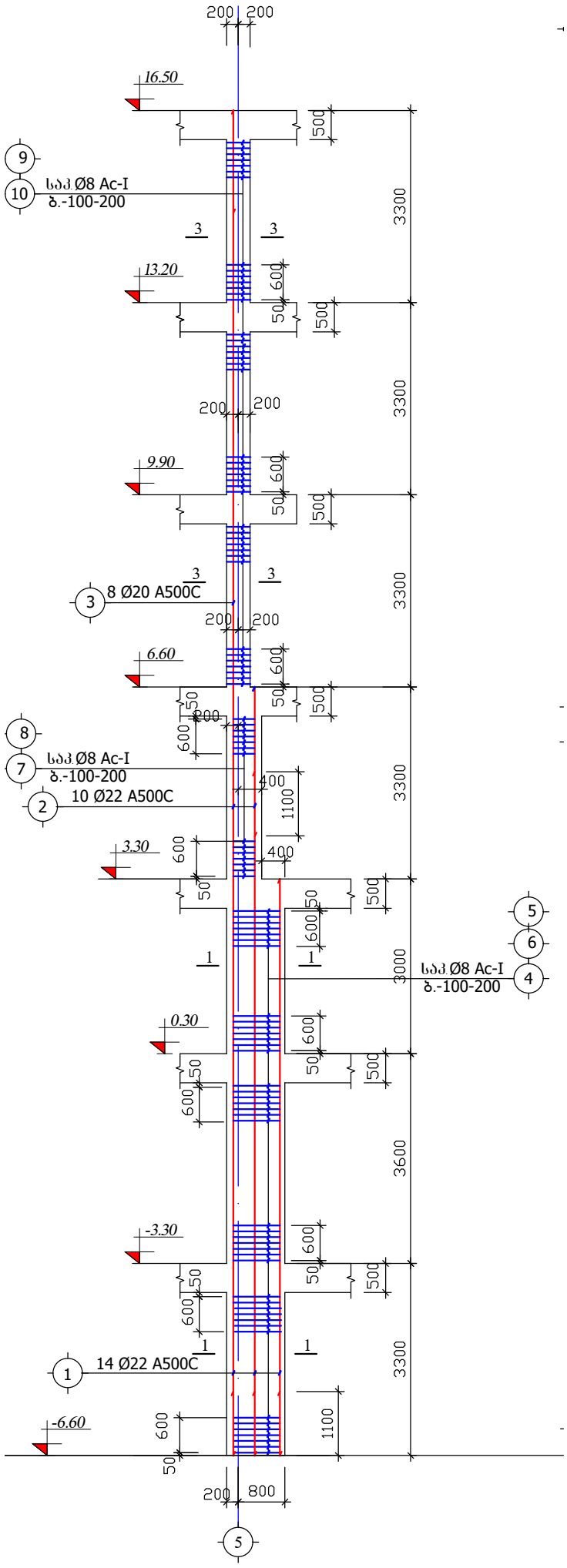


| | | | | | | | |
|---|---|---|---|---|---|---|---|
| თბილისი. ბაგები. წყნეთის გზატკეცილის №40-40ა ს/კ. 01.14.08.001.600 მრავალბინიანი სახსოვრებელი სახლის პროექტი | | | | სვეტები მს-4, მს-5. | | | 2023 წ. |
| დირექტორი | გ.იაშვილი | | | შურც. № | რაოდენ. | მასშტ. | დაკვ. № |
| | | | | კ -25 | | 1:100 | |
| კონსტრუქტორი | ლორთქიფანიძე | | | დამკვეთი: | | | |
| | | | | შ.პ.ს. "მონოლითი+" | | | |
| | | | | | | | |

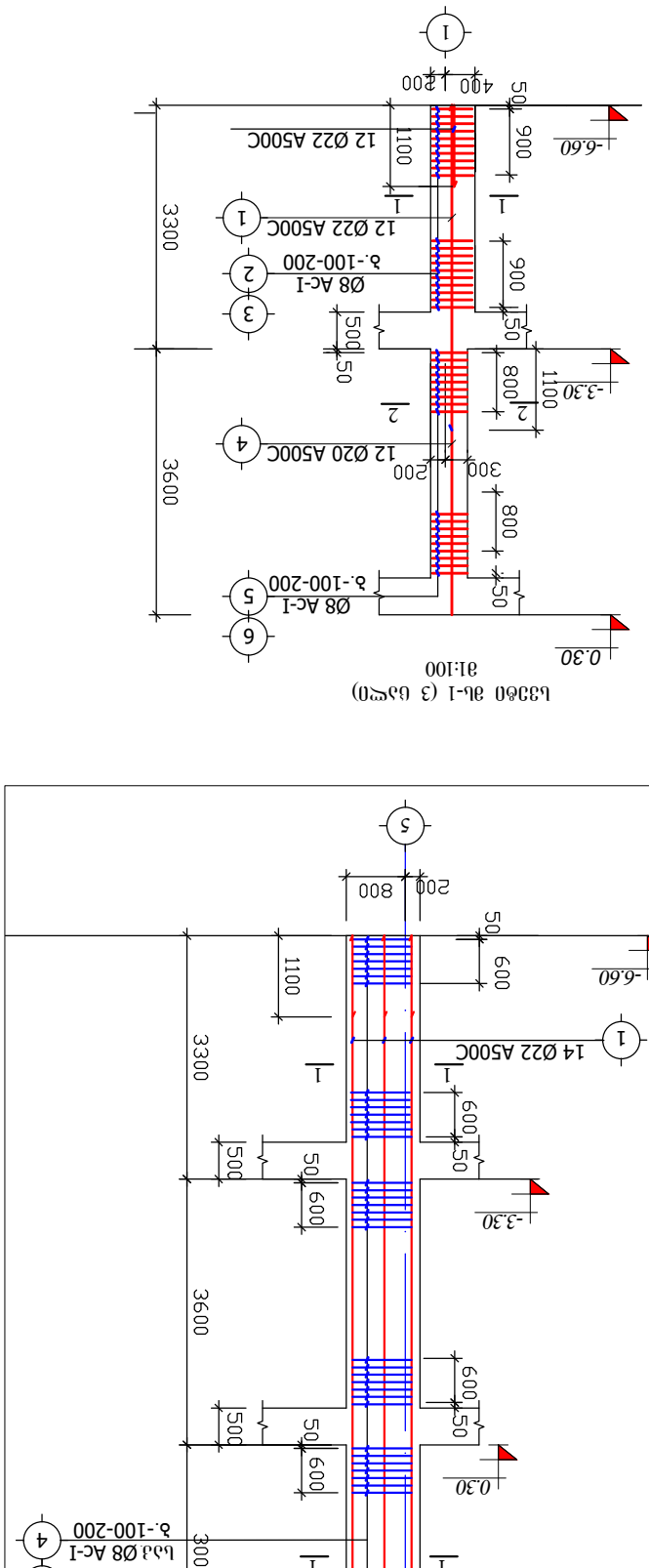


Ь33Ь0 аЬ-3 (1 Ь∂ЄО)
а1:100

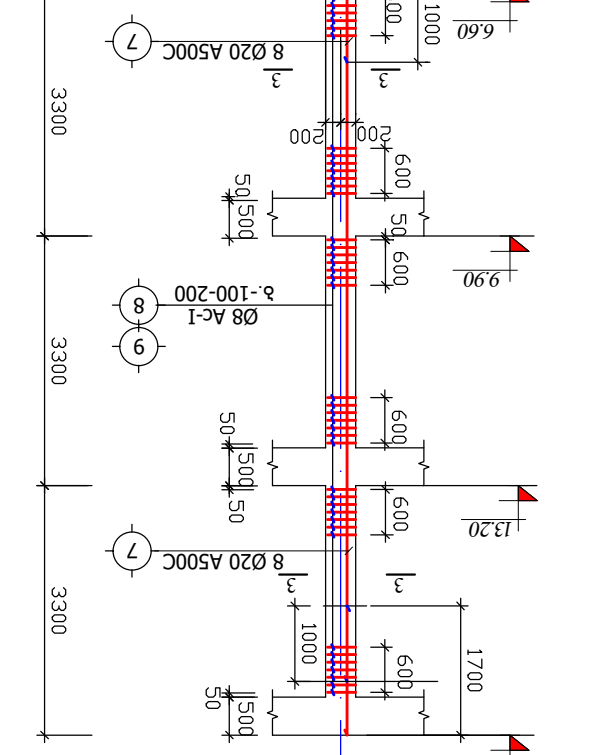


Ь33Ь0 аЬ-6 (3 Ь∂ЄО)
а1:100

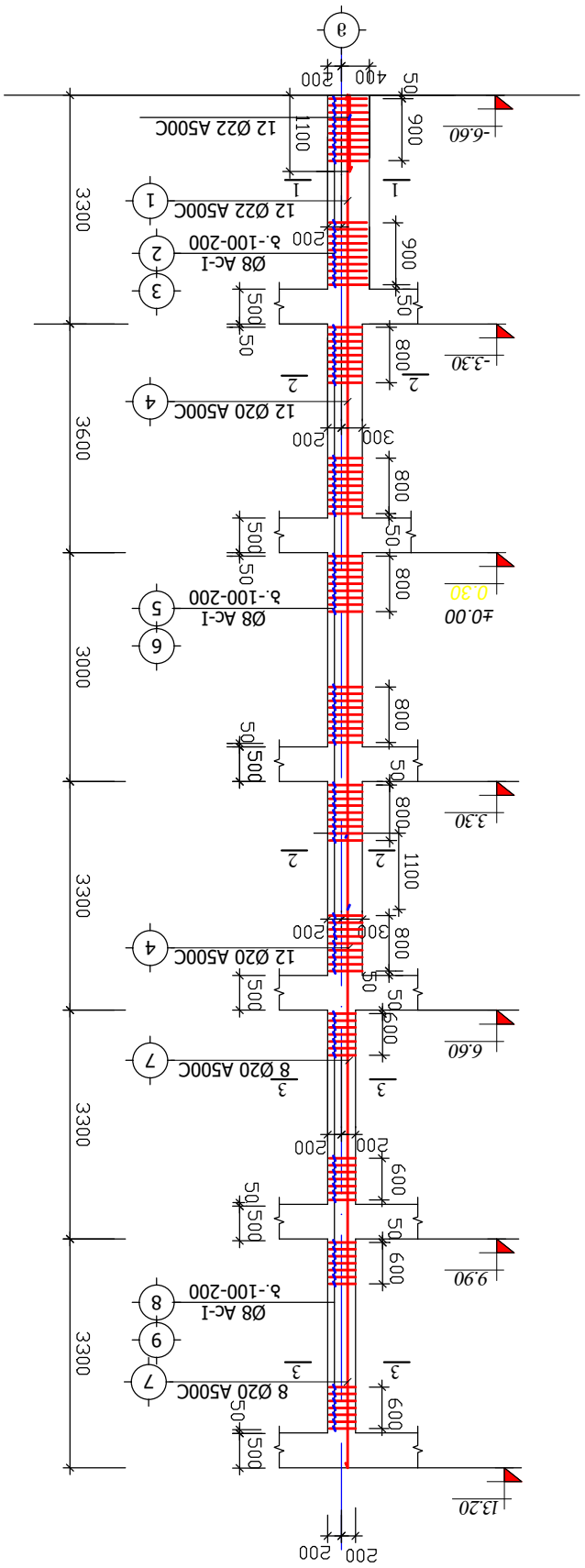


Ь33Ь0 аЬ-7 (4 Ь∂ЄО)
а1:100

| | | | | | |
|---|---|---|---|---|---|
| Ь/д. 01.14.08.001.600 ЗЄ∂∂ЄЄЄЄЄ ЬЄЬЄЄЄ∂∂ЄЄЄЄ №40-403 Ь∂ЄЄЄЄЄ

სვეტი მს-8 (10 ცალი)
მ1:100

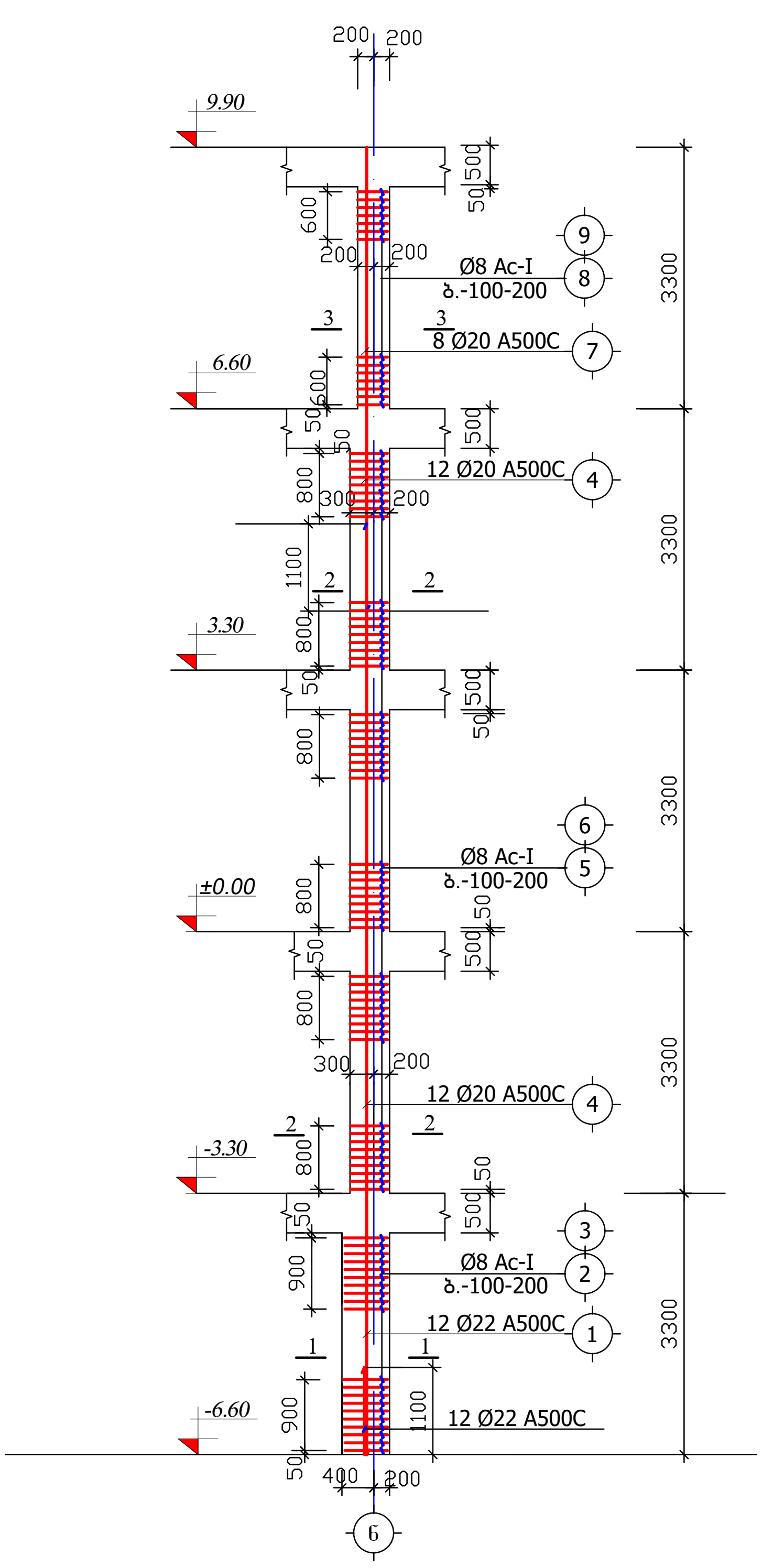


პილონი პლ-1 (1 ცალი)
მ1:100

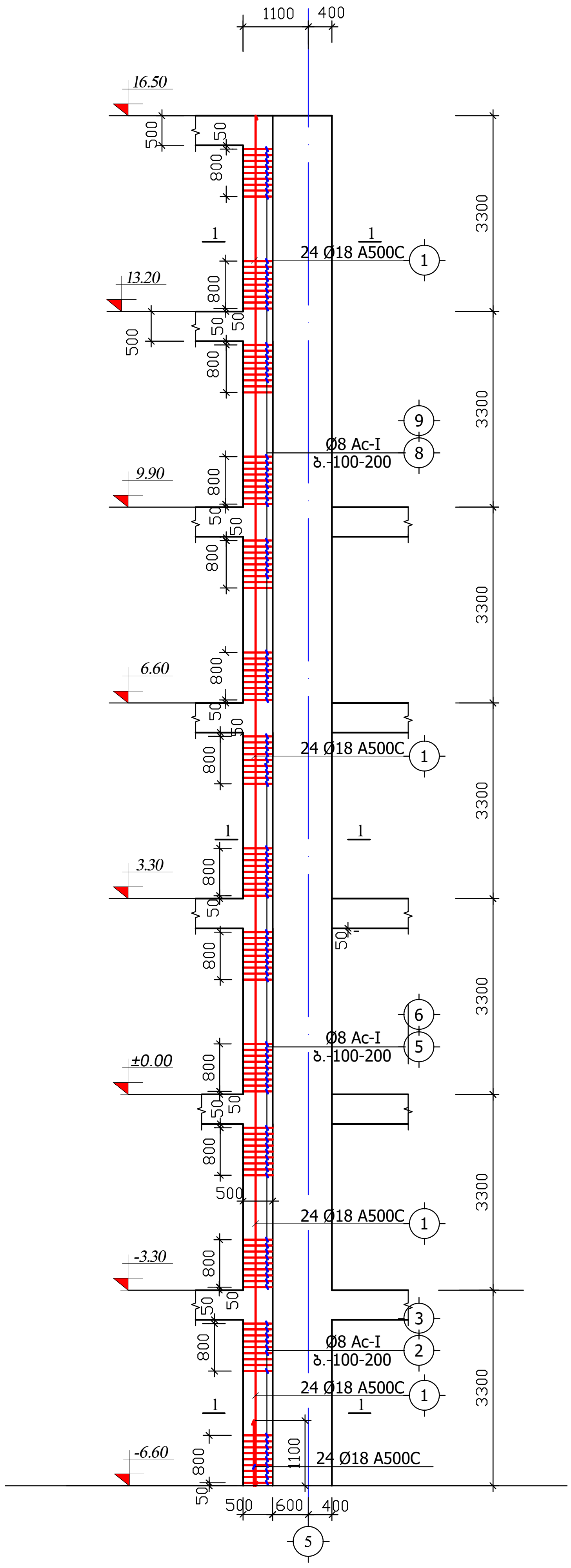


პილონი პლ-2 (1 ცალი)
მ1:100

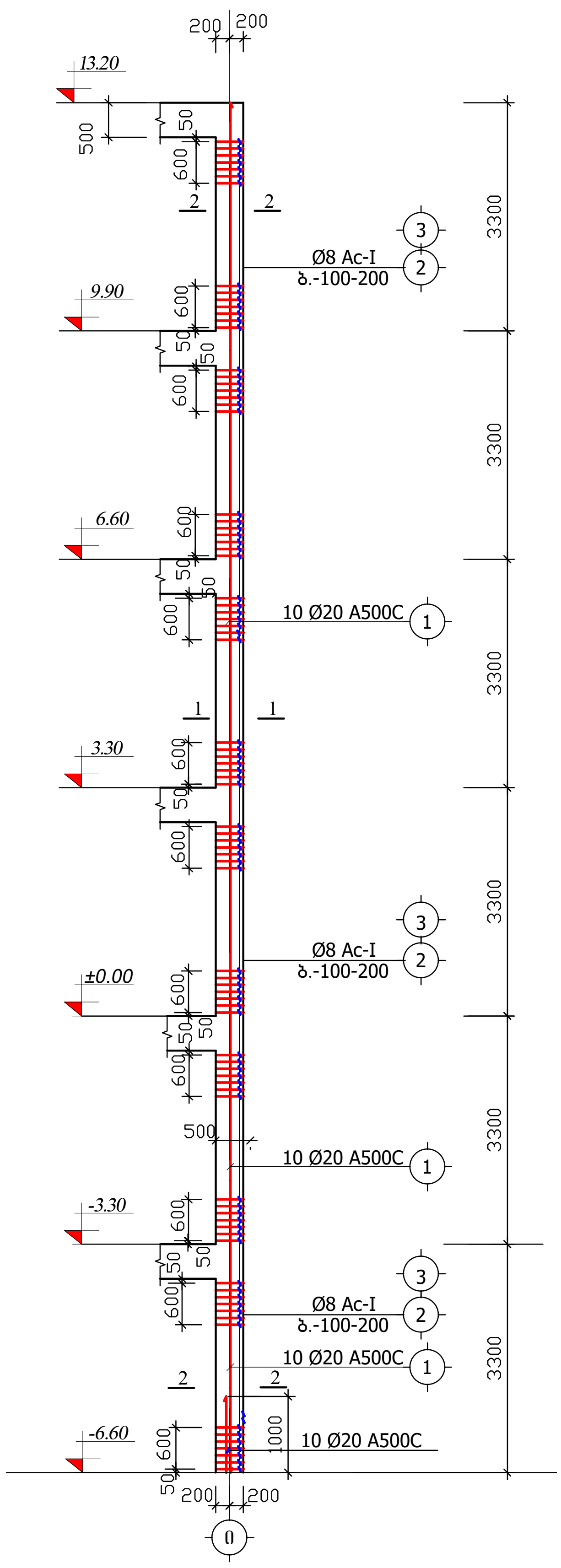


სვეტი მს-2 (4 ცალი)
მ1:100

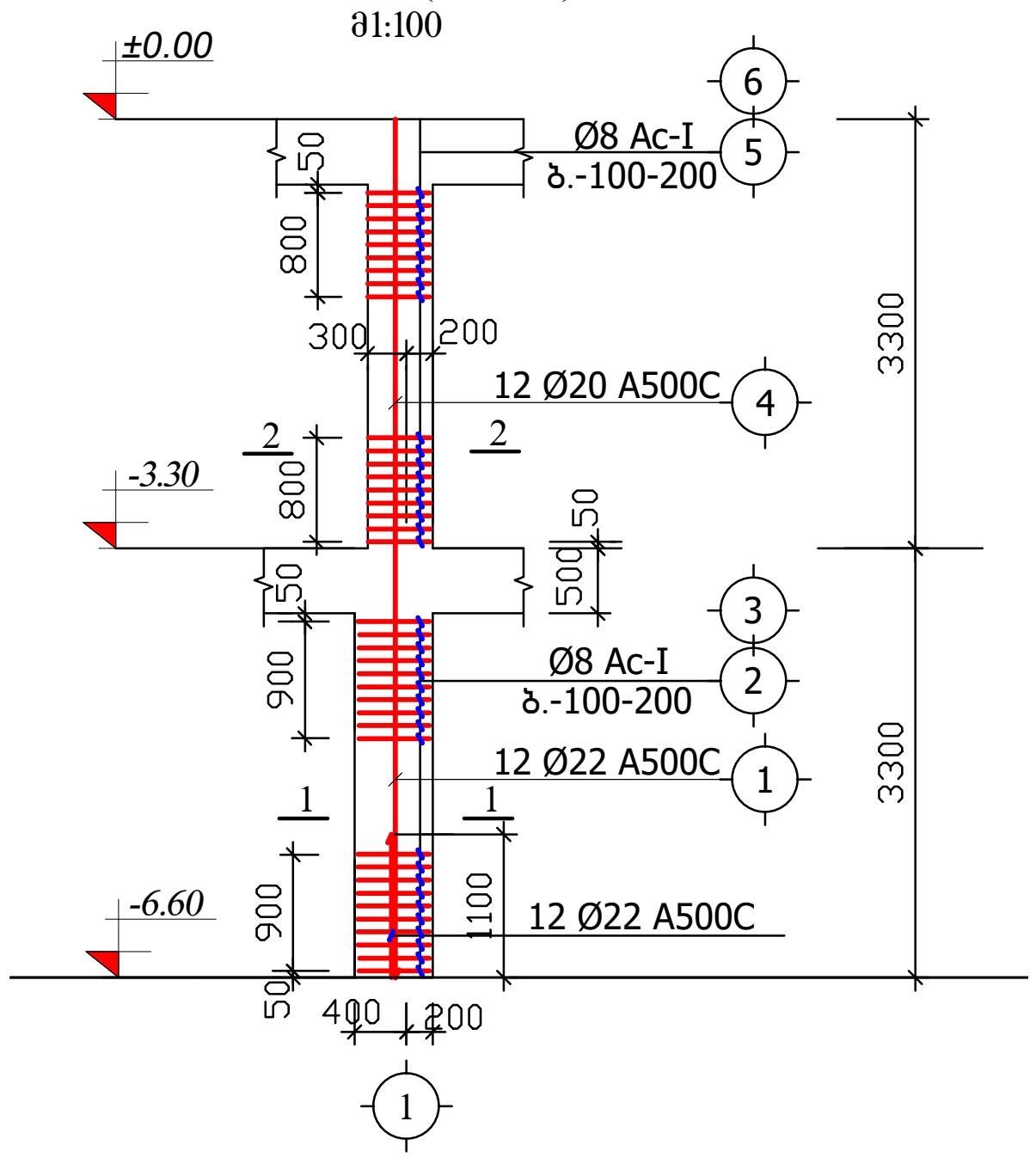


| თბილისი. ბაგები. წყნეთის გზატკეცილის №40-40ა<br>ს/კ. 01.14.08.001.600 მრავალბინიანი საცხოვრებელი<br>სახლის პროექტი | | | | სვეტები მს-2, მს-8, პლ-1 და პლ-2. | | | 2023 წ. |
|---|---|---|---|---|---|---|---|
| დირექტორი | გ.იაშვილი | | | ფურც. № | რაოდენ. | მასშტ. | დაკვ. № |
| | | | | კ -27 | | 1:100 | |
| კონსტრუქტორი | ლორთქიფანიძე | | | დამკვეთი: | | | |
| | | | | შ.პ.ს. "მონოლითი+" | | | |
| | | | | | | | |

| | | | | | | | |
|---|---|---|---|---|---|---|---|
| | | | | | | | |
| | | | | | | | |
| | | | | | | | ՀՀՇ-ական ՍՊԸ-ի ՃԱՐՏԱՐԱՊԵՏ |
| ՃԱՐՏԱՐԱՊԵՏԱԿԱՆ ՀՍԿ | ՀԱՅԿԱԿԱՆ ՀԱՆՐԱՊԵՏՈՒԹՅԱՆ ՆԱԽԱՐԱՐՈՒԹՅԱՆ ՔԱՂԱՔԱՇԻՆՈՒԹՅԱՆ ԵՎ ՏԵՐԻՏՈՐԻԱԼ ԿԱՌԱՎԱՐՄԱՆ ՊԵՏԱԿԱՆ ԾԱՌԱՅՈՒԹՅՈՒՆ | | | | | | |
| ՀՀ ԿՐԹՈՒԹՅԱՆ, ԳԻՏՈՒԹՅԱՆ, ՄՇԱԿՈՒՅԹԻ ԵՎ ՍՊՈՐՏԻ ՆԱԽԱՐԱՐՈՒԹՅԱՆ «ՀԱՅԿԱԿԱՆ ՀԱՆՐԱՊԵՏՈՒԹՅԱՆ ՀԱՆՐԱԿՐԹԱԿԱՆ ՀԱՄԱԼՍԱՐԱՆ» ՊԵՏԱԿԱՆ ՈՉ ԱՌԵՎՏՐԱՅԻՆ ԿԱԶՄԱԿԵՐՊՈՒԹՅՈՒՆ | | | | | | | |
| ՀՀ, ք. Երևան, Ա. Խաչատրյան 1/8 | | | | | | | |
| ՀՀ ԿԳՄՍՆ ՊԵՏԱԿԱՆ ՈՉ ԱՌԵՎՏՐԱՅԻՆ ԿԱԶՄԱԿԵՐՊՈՒԹՅԱՆ «ՀՀ ԿԳՄՍՆ ՀՀՇ» ՊՈԱԿ-ի ՀՀ, ք. Երևան, Ա. Խաչատրյան 1/8 ՇԵՆՔԻ ՇԻՆԱՐԱՐՈՒԹՅԱՆ ՀԱՄԱՐ ՊԱՏԱՍԽԱՆԱՏՎՈՒ ՀԱՍԱՐԱԿՈՒԹՅԱՆ ՀԱՄԱՐ

## 1-1
მ1:10

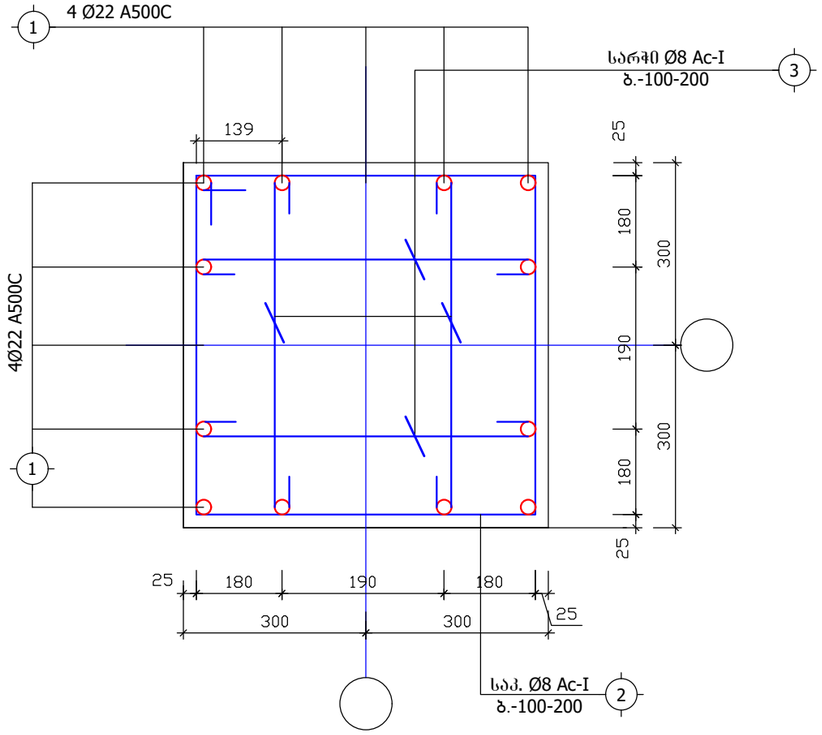


## 2-2
მ. 1:10

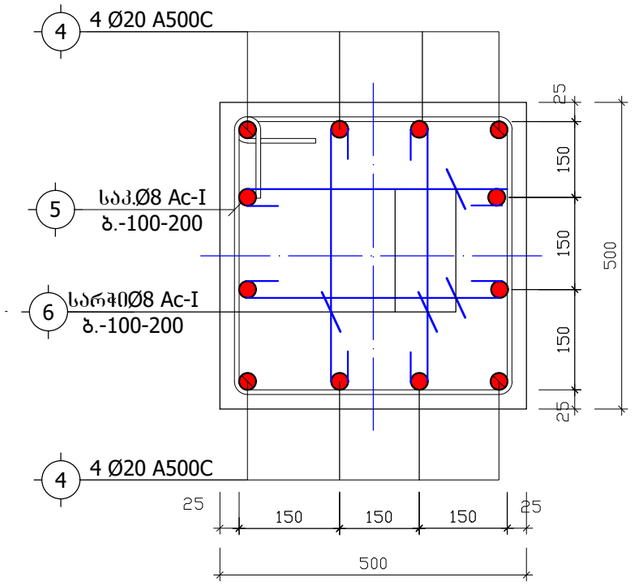


## 3-3
მ. 1:10

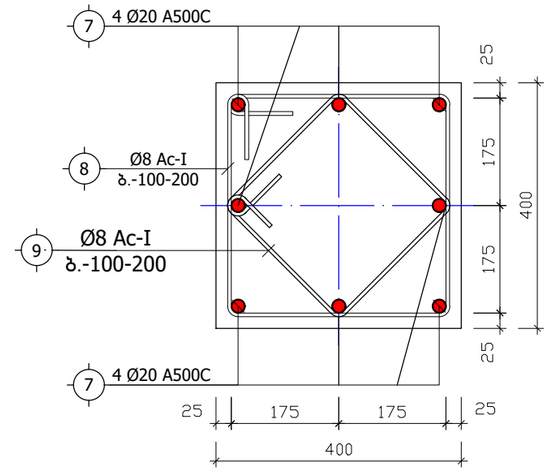


## 5-5
მ. 1:10

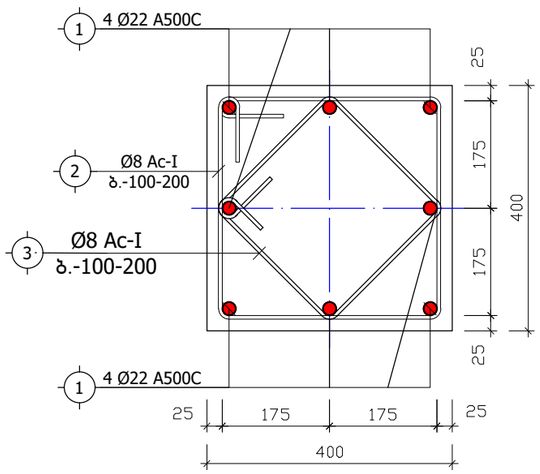


## 1-1
მ1:20

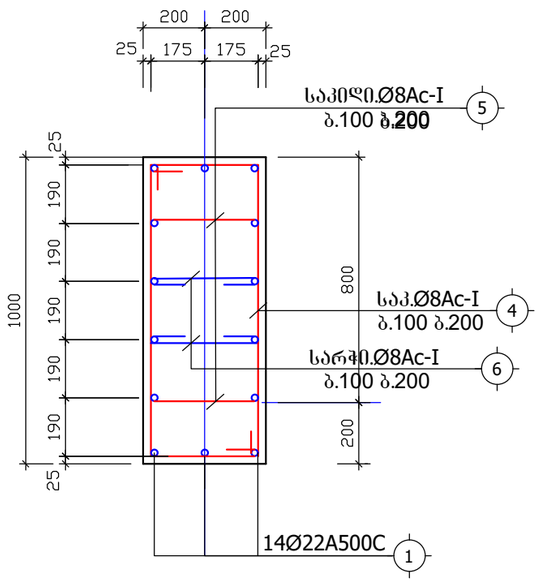


## 2-2
მ1:20

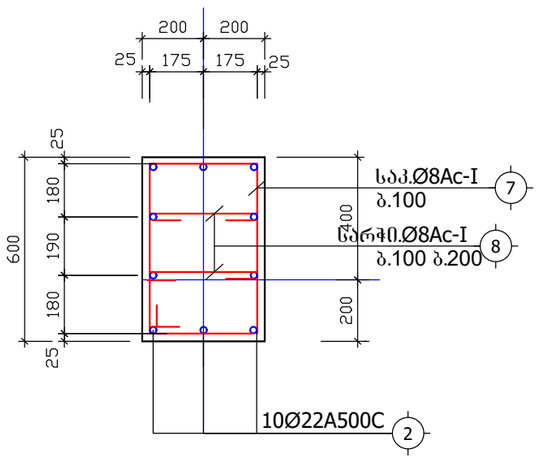


| | | | | | | | |
|---|---|---|---|---|---|---|---|
| თბილისი. ბაბები. წყნეთის გზაჯვარედინის №40-40ა ს/კ. 01.14.08.001.600 მრავალბინიანი საცხოვრებელი სახლის პროექტი | | | | სვეტების კვეთები 1-1-3-3, 5-5. | | | 2023 წ. |
| დირექტორი | გ.ბაშვილი | | | ფურც. № | რაოდენ. | მასშტ. | დაკვ. № |
| | | | | კ -29 | | 1:20 | |
| კონსტრუქტორი | ლ.ონიანიძე | | | დამკვეთი: | | | |
| | | | | შ.პ.ს. "მრონოლითი+" | | | |
| | | | | | | | |

## 1-1
მ1:20

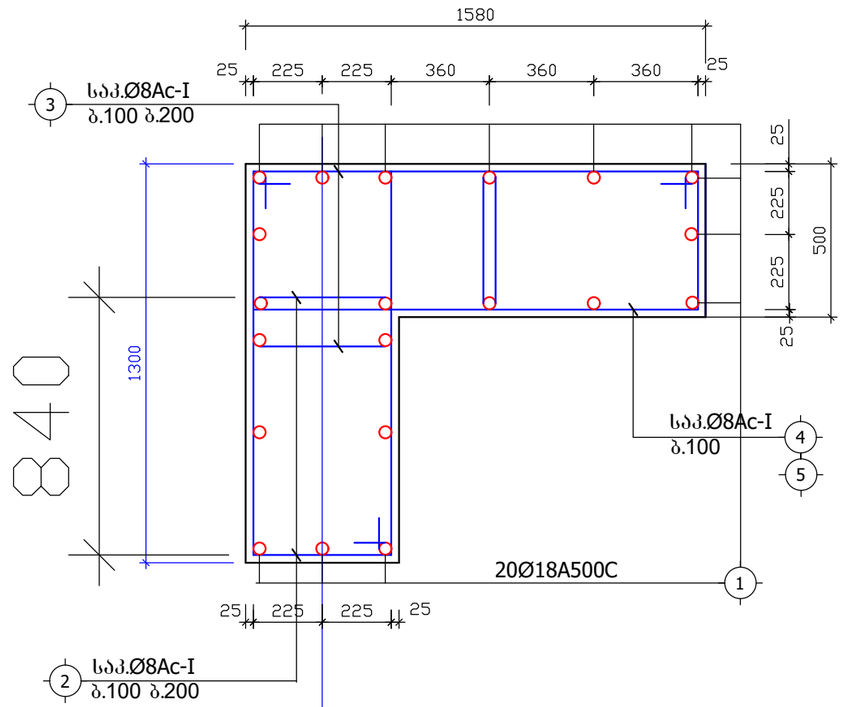


## 4-4
მ1:20

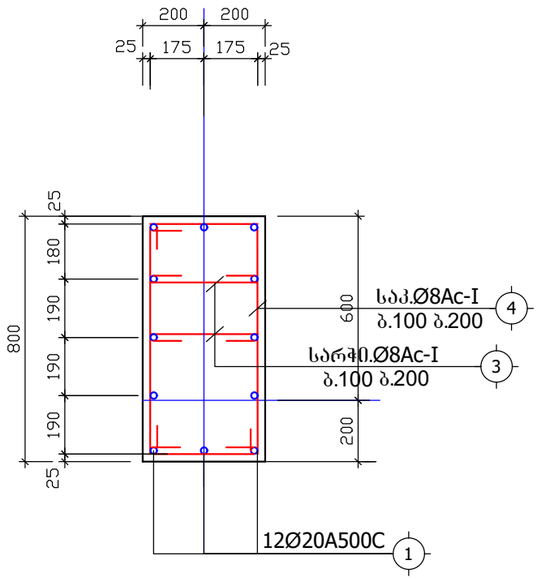


## 2-2
მ1:20

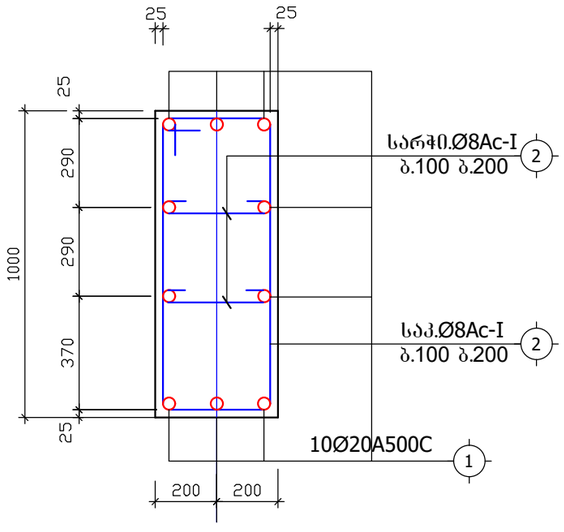


## 3-3
მ1:20

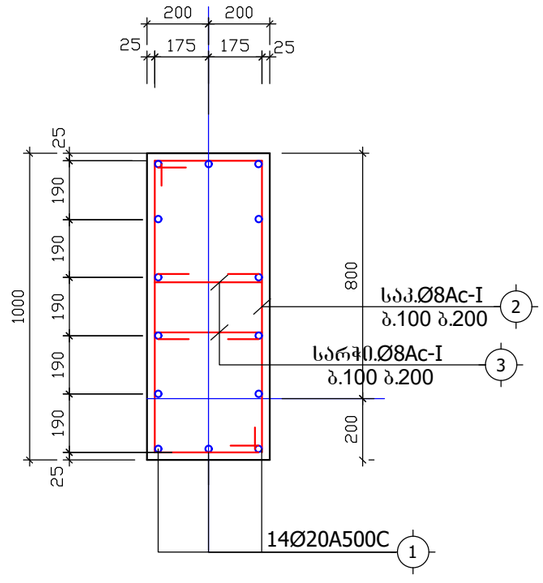


შენიშვნები:

1.მოცემული ზურც.იხ. კ-1 ზურც.ერთად.

.

| | | | | | | | |
|---|---|---|---|---|---|---|---|
| თბილისი. ბაგები. წყნეთის ზგაბკეცილის №40-40ა ს/კ. 01.14.08.001.600 მრავალბინიანი საცხოვრებელი სახლის პროექტი | | | | სვეტების კვეთები 1-1-3-3, 4-4. | | | 2023 წ. |
| დირექტორი | გ.იაშვილი | | | ზურც. № | რაოდენ. | მასშტ. | დაკვ. № |
| | | | | კ -30 | | 1:20 | |
| კონსტრუქტორი | ლორთქიფანიძე | | | დამკვეთი: | | | |
| | | | | შ.პ.ს. "მრონოლითი+" | | | |
| | | | | | | | |

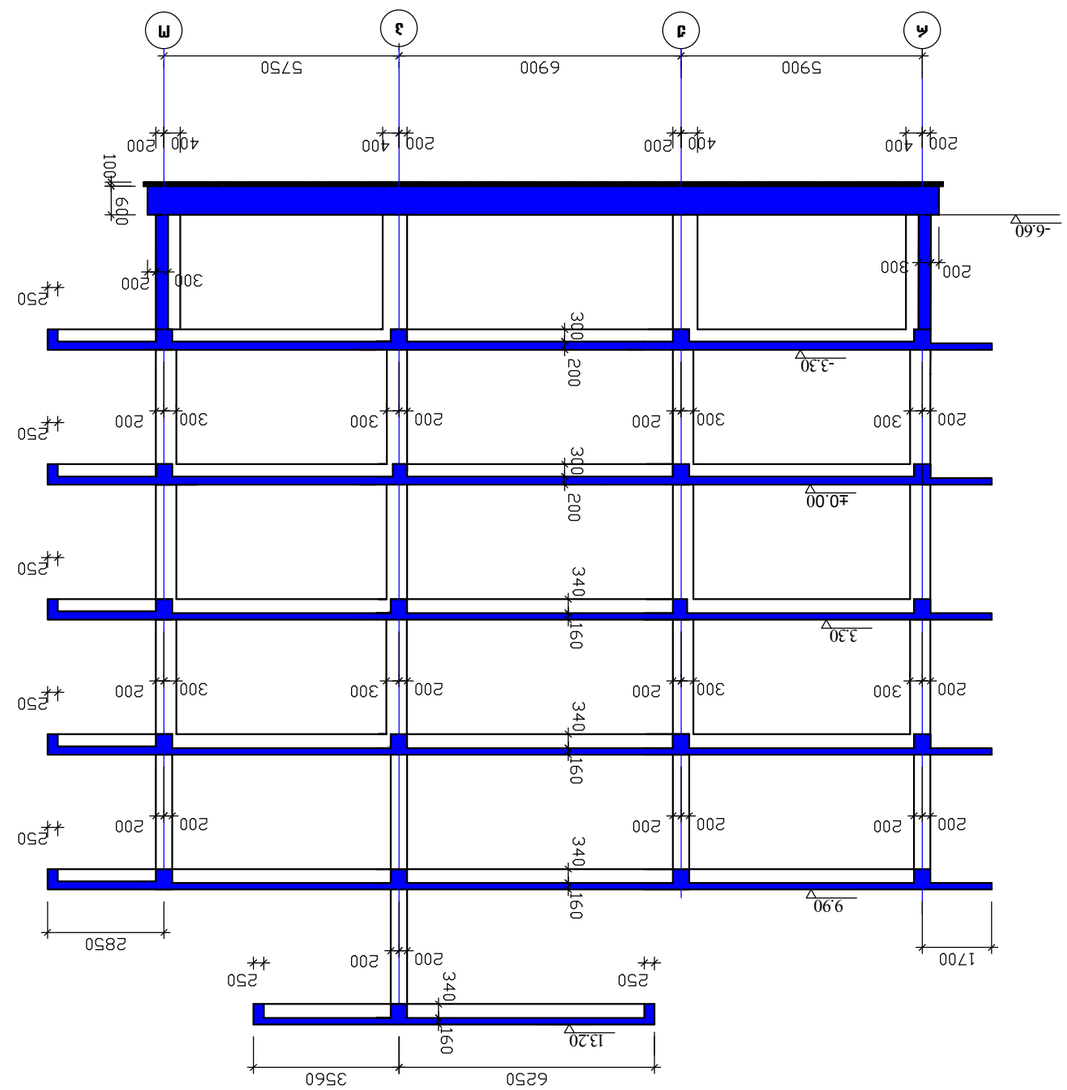


Вертикальная связь по оси "9" между осями "А" и "М"
М1:150

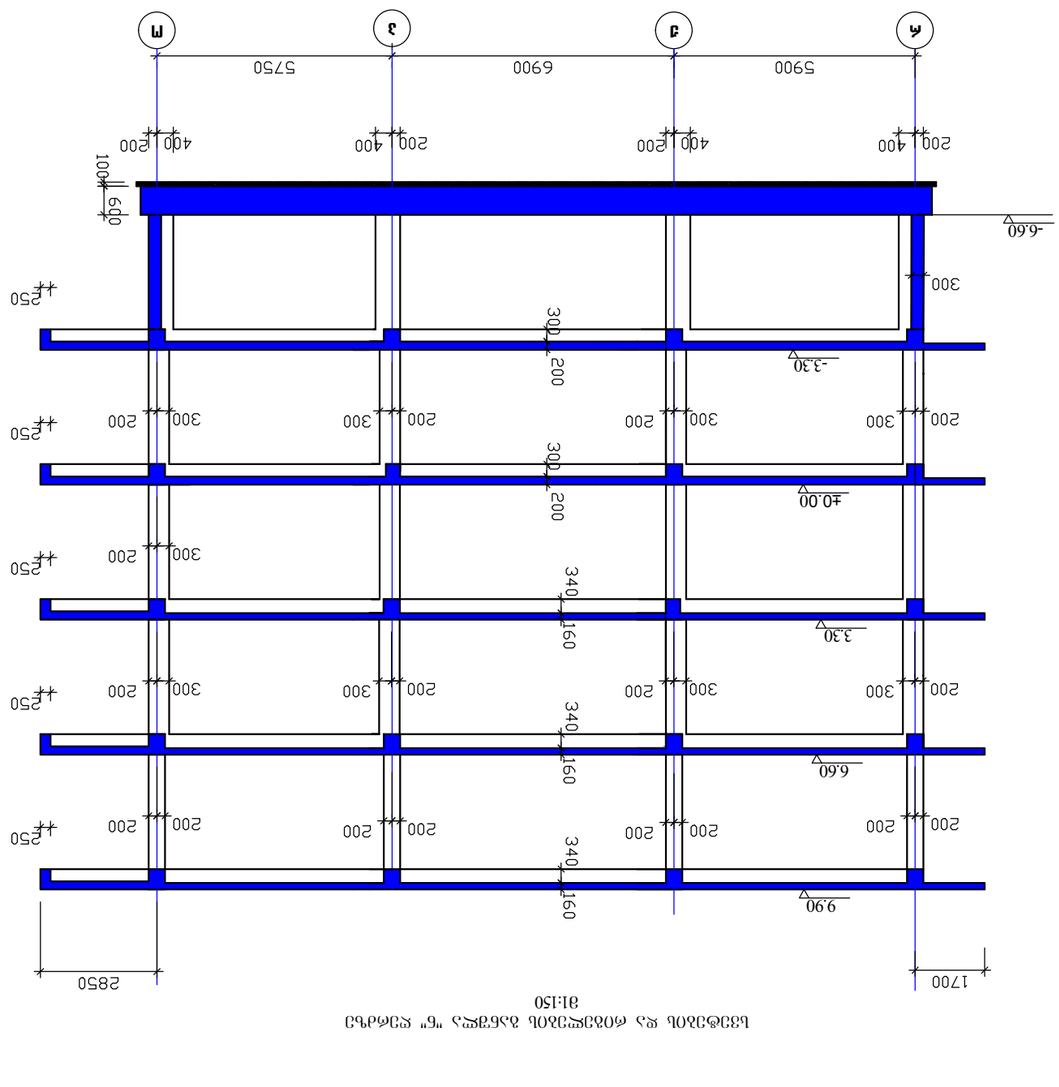


Вертикальная связь по оси "6" между осями "А" и "М"
М1:150

Примечание:

1.Отметки даны по проекту АР-1 ТУ.ОБ.ОЭ.ОЭ.

| | | | | | |
|---|---|---|---|---|---|
| Изм.Кол.Уч.Лист.№док. | Подпись | Дата | 01.14.08.001.600 ЭС.ОВ.ВК | | |
| Гип | | | Вытяжная система В1 | Стадия | Лист | Листов |
| Н.контр. | | | | Р | 1 | 1 |
| | | | | ООО "ЭПОС" | | |

| | | | | | |
|---|---|---|---|---|---|
| | | | | | |
| | | | | | |
| Гип.Гиниятуллин | | | | | |
| Н.контр.Сафиуллина | | | | | |
| Рук.гр.Ахметзянов | | | | | |

| | | | | | |
|---|---|---|---|---|---|
| | | | | | |
| | | | | | |
| | | | | | |

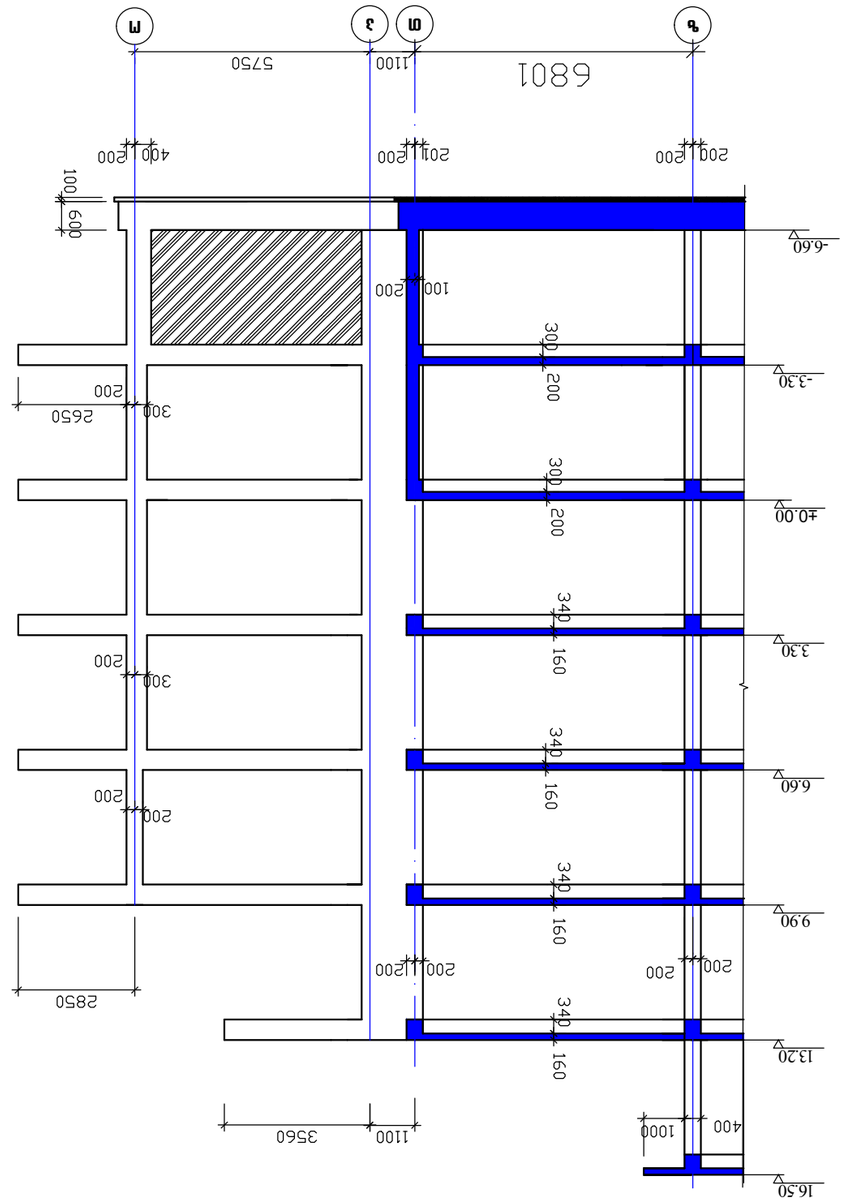


Фасад по оси "Ъ" в осях "0" и "М"

М 1:50

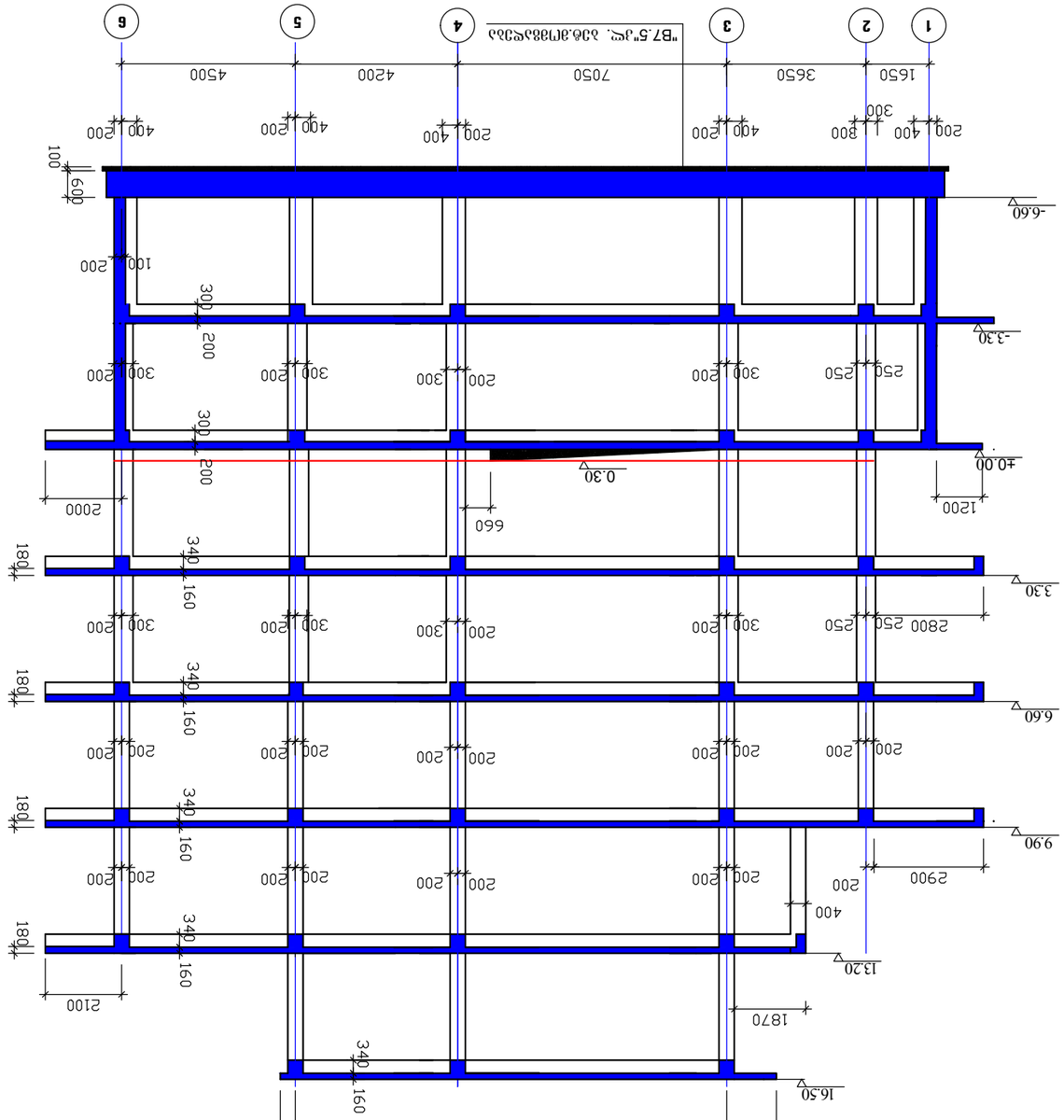


Фасад по оси "С" в осях 1/А-6/А

М 1:50

Подготовлено на основании Задания на проектирование №40-404 от 23.08.2023 г. на основании Договора №404-2023 от 23.08.2023 г.

Заказчик: Администрация города Ростова-на-Дону

Объект: Многоквартирный жилой дом №1 по генплану в 2-м микрорайоне жилого района "Левенцовский-3" в Ворошиловском районе города Ростова-на-Дону

| | | | | | |
|---|---|---|---|---|---|
| Главный архитектор проекта | Ахмедов Ф.Ф. | | | Стадия | Лист | Листов |
| Начальник отдела | Ахмедов Ф.Ф. | | | Р | 1 | 1 |
| Гип | Ахмедов Ф.Ф. | | | | | |
| Н.контроль | Ахмедов Ф.Ф. | | | | | |
| | | | | | | |
| | | | | | | |
| |

Разрез по оси "Ф" секции 2 (с учетом демонтажа)

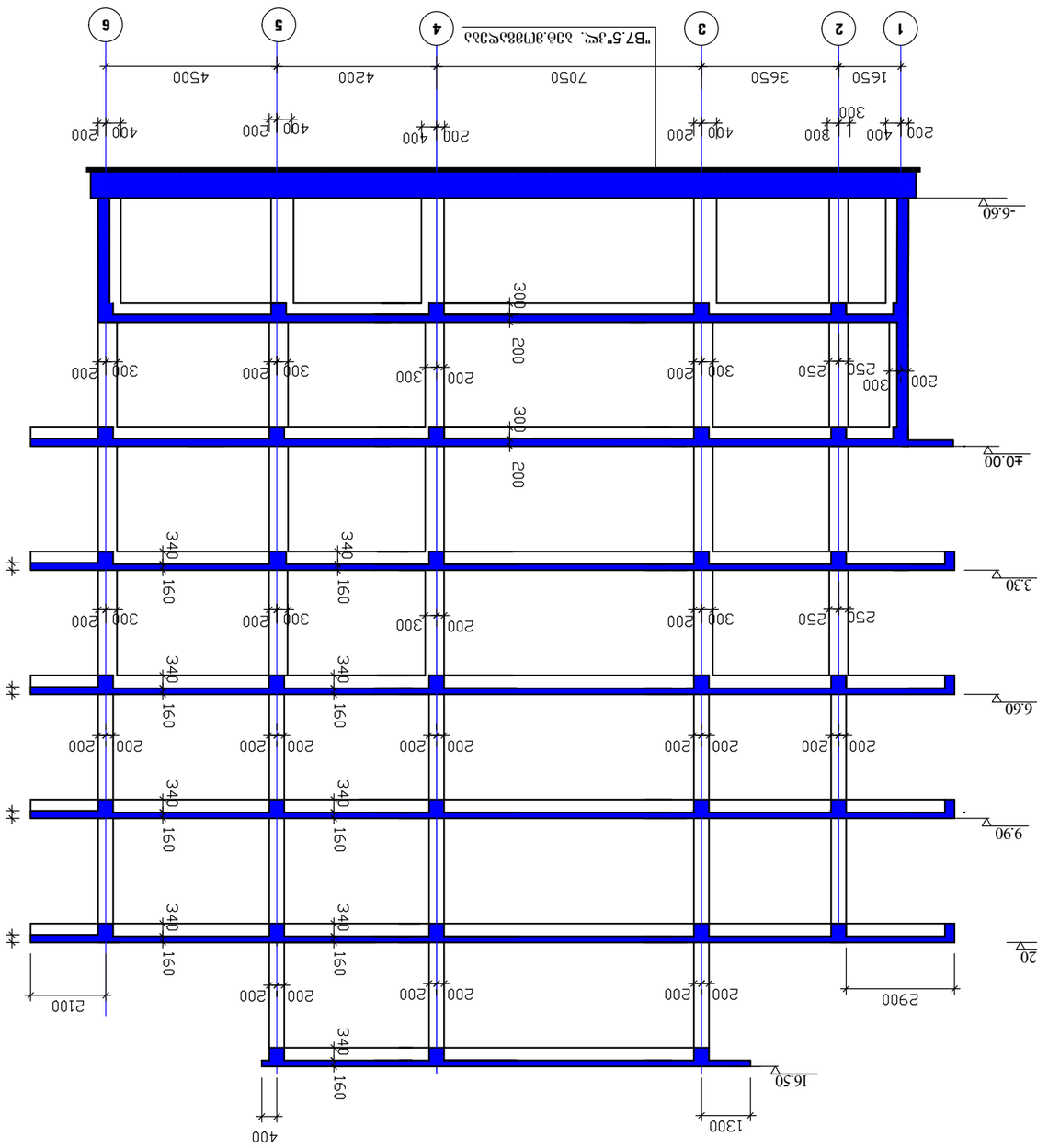


Разрез по оси "3" секции 2 (с учетом демонтажа)

31:150

Разрез по оси "Ф" секции 2 (с учетом демонтажа)

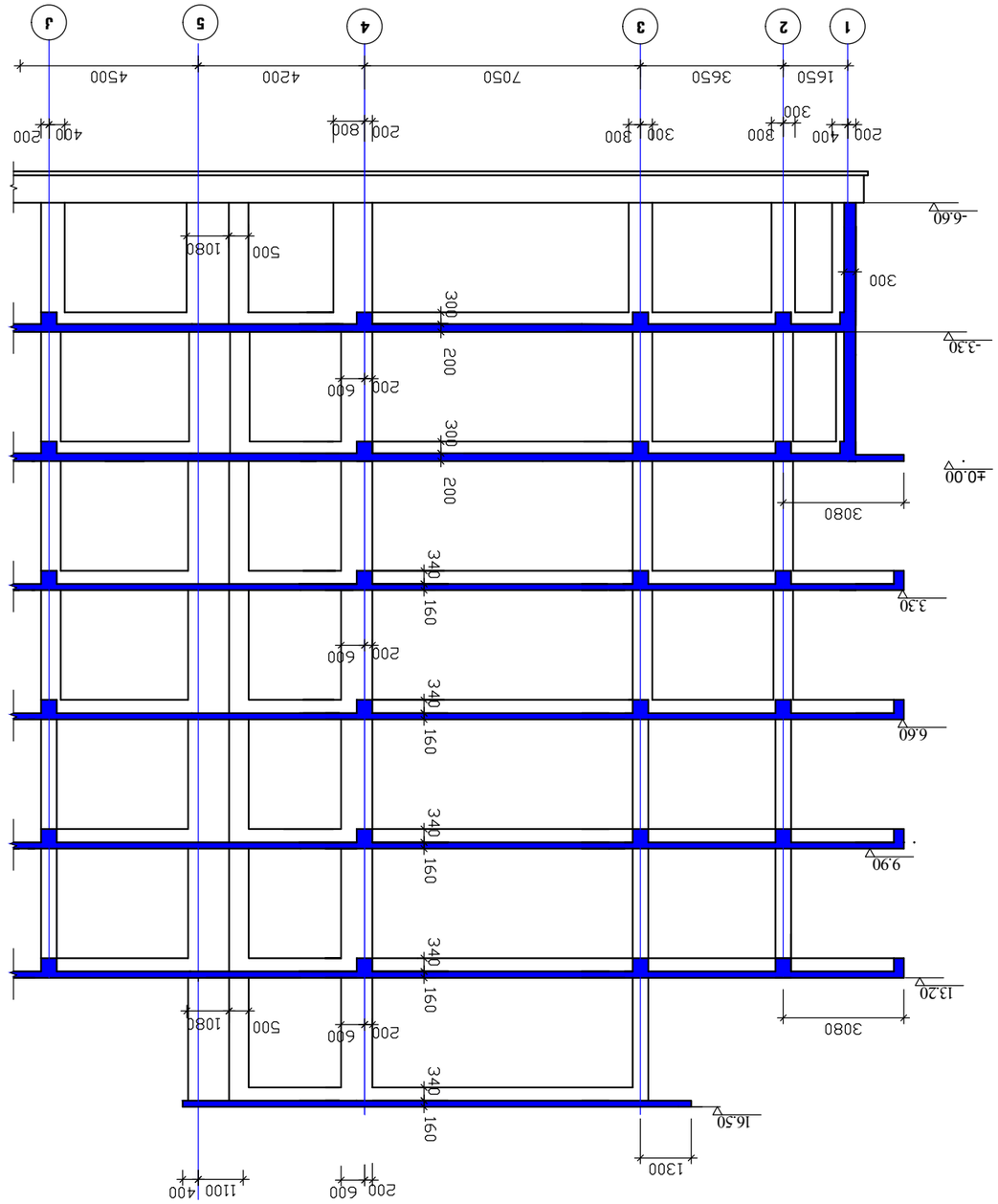


31:150

| | | | | | |
|---|---|---|---|---|---|
| | | | | | |
| | | | | | |
| Гип.инж. | | | | | Изм.Кол.Уч.Лист№док.Подп.Дата |
| Нач.отд. | | | | | |
| Н.контр. | | | | | |
| ГИП | | | | | |

| | | | | | |
|---|---|---|---|---|---|
| Стадия | Лист | Листов | | | |
| Р | 34 | | | | |

| | |
|---|---|
| Разрез по оси "Ф" секции 2 (с учетом демонтажа) | |
| Разрез по оси "3" секции 2 (с учетом демонтажа) | |

| | |
|---|---|
| Инв.№подл. | Подпись и дата |

| | |
|---|---|
| Взам.инв.№ | |
| Подпись и дата | |

| | |
|---|---|
| Инв.№подл. | Подпись и дата |

| | |
|---|---|
| Взам.инв.№ | |
| Подпись и дата | |

| | | | | | |
|---|---|---|---|---|---|
| Изм. | Кол.уч. | Лист | №док. | Подп. | Дата |

| | | | |
|---|---|---|---|
| Стадия | Лист | Листов | |
| Р | 34 

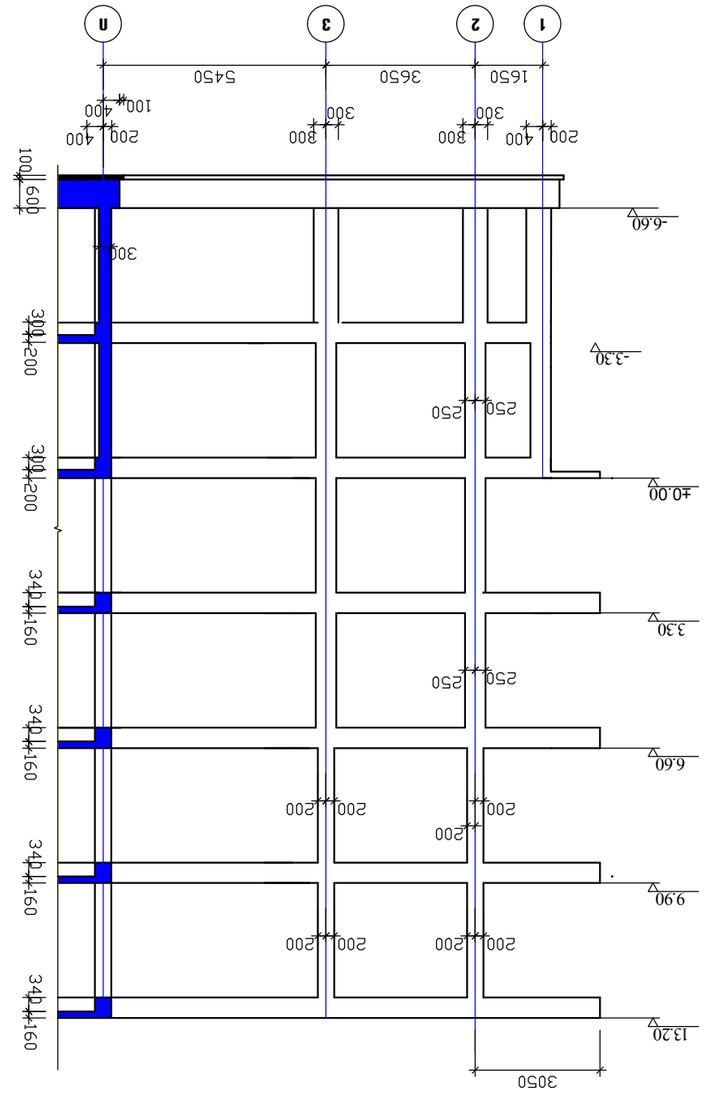


Бетонирование ж/б фундаментной плиты в осях "1" ж/с 1/А-3/А
Ø1:150

| | | | | | |
|---|---|---|---|---|---|
| Изм. Кол.уч. | Лист | №док. | Подп. | Дата | 01.14.08.001.600 ЭМ.ОВ.ВК.ТХ |
| Гип | Ефимов | | | | Стадия: Р |
| Нач.отд. | Ефимов | | | | Лист 1 Листов 1 |
| Н.контр. | Ефимов | | | | ООО "Проектная компания "Стройинвест" |
| ГАП | Ефимов | | | | |

Производственный корпус №40-40а
Бетонирование ж/б фундаментной плиты
Бетонирование ж/б фундаментной плиты в осях "1" ж/с 1/А-3/А
2023 г.

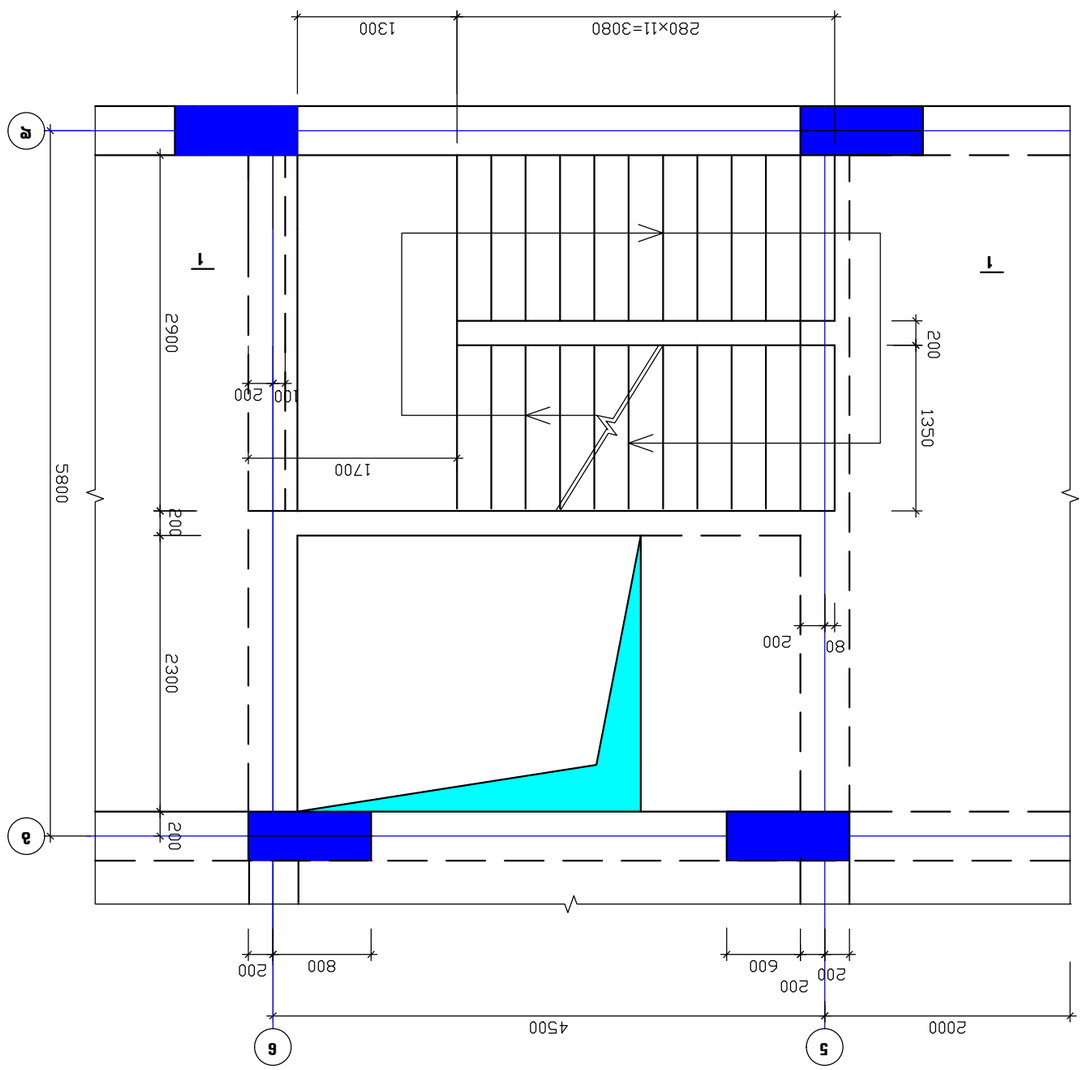


Дом жилой 1-секционный с объединенной котельной. Блок 1-3-0.30

1:50

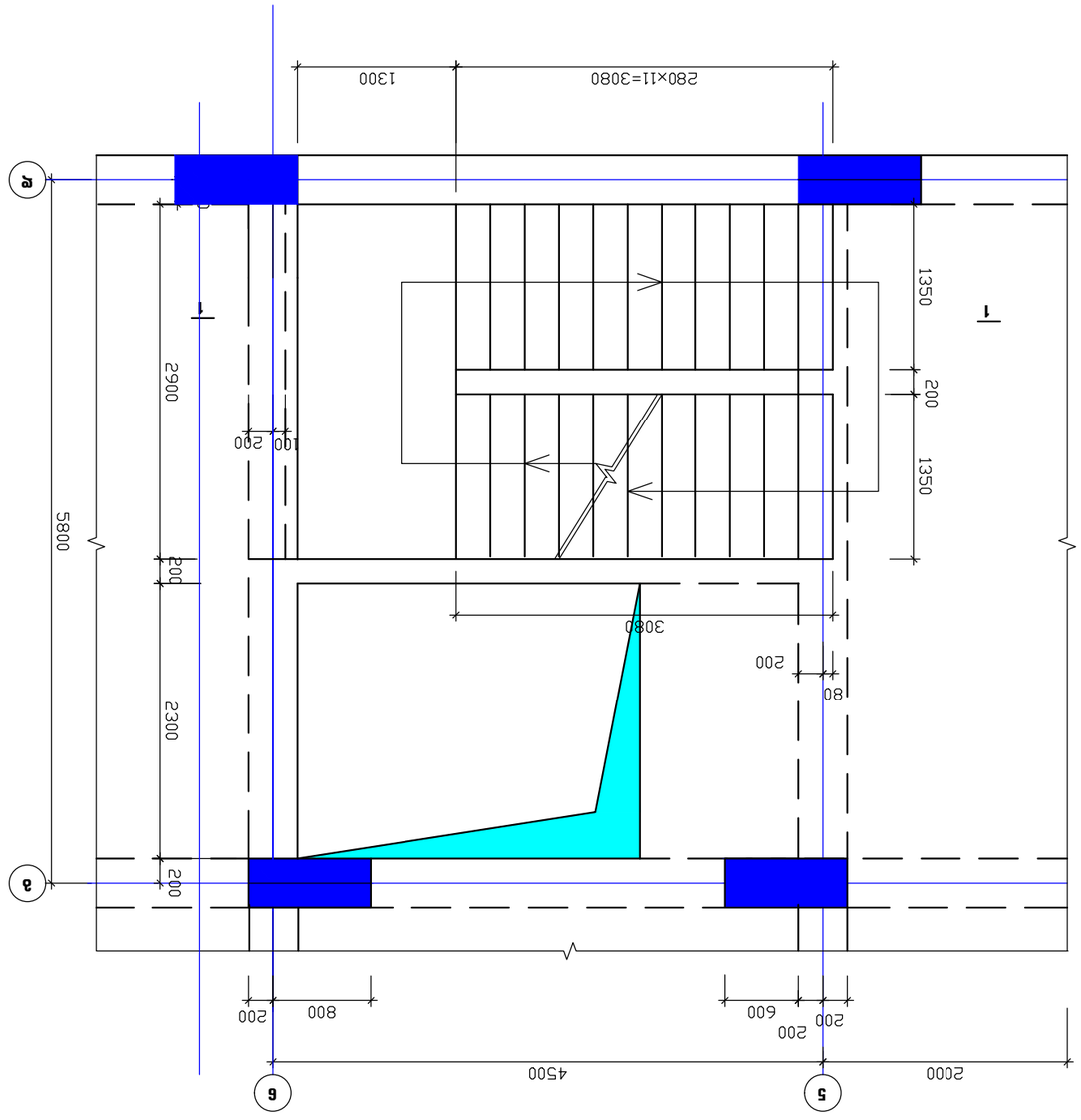


Дом жилой 1-секционный с объединенной котельной. Блок -3.30

1:50

| | | | | | | | |
|---|---|---|---|---|---|---|---|
| | | | | | | | |
| | | | | | | | |
| Изм. | Кол.уч. | Лист | № док. | Подп. | Дата | | |
| Разработал | | | | | | | |
| Проверил | | | | | | | |
| Н.контр. | | | | | | | |
| ГИП | | | | | | | |

Дом жилой 1-секционный с объединенной котельной. Блок 1-3-0.30

Стадия: Р | Лист: 36 | Листов: 50

ООО "Архитектурное бюро №40-АПА"

Инв.№ подл. | Подп. и дата | Взам.инв.№

კიბე კბ-1. უჯრედის ბეტონი ნიშნ. 3.30
მ1:50

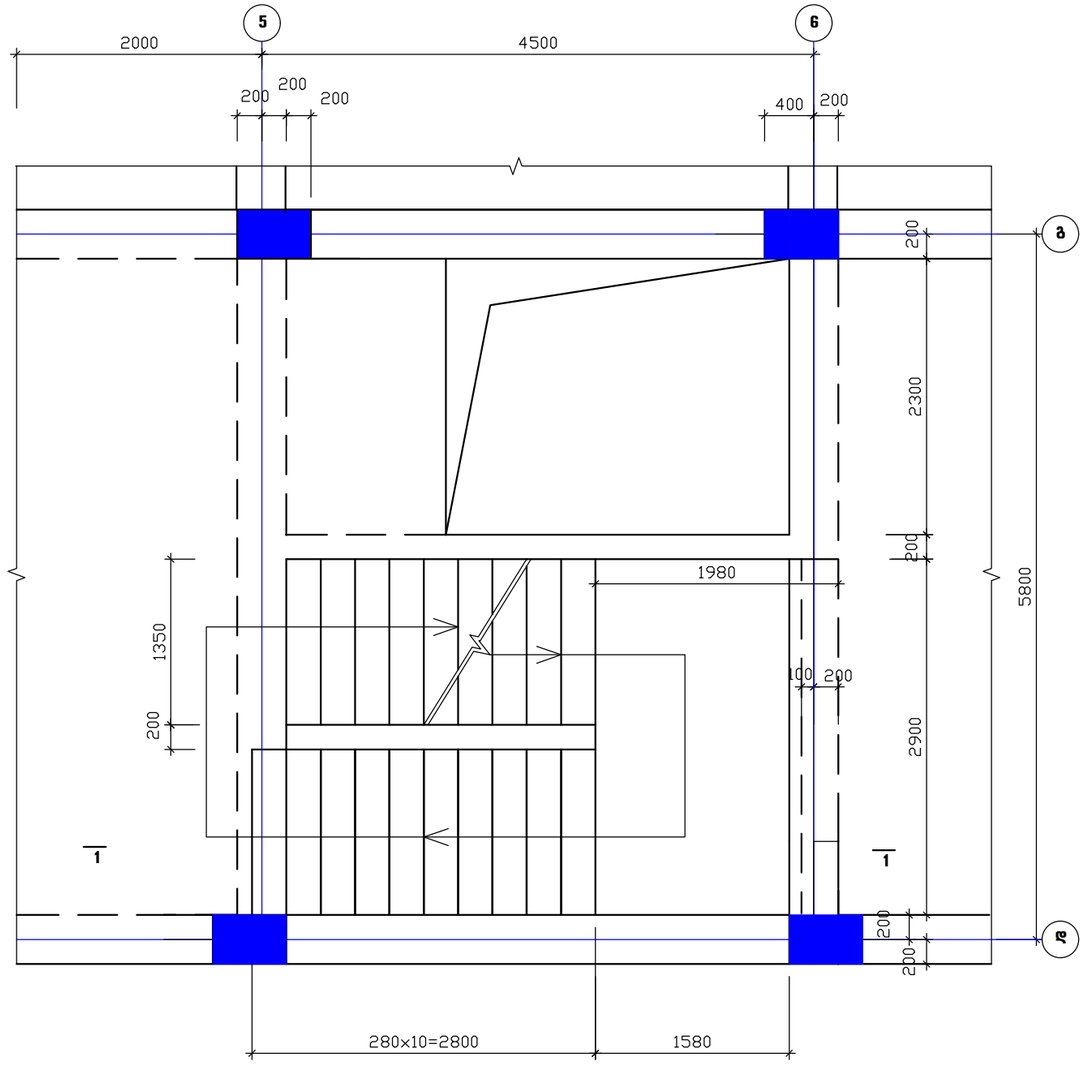


კიბე კბ-1. უჯრედის ბეტონი ნიშნ. 6.60, 9.90, 13.20
მ1:50

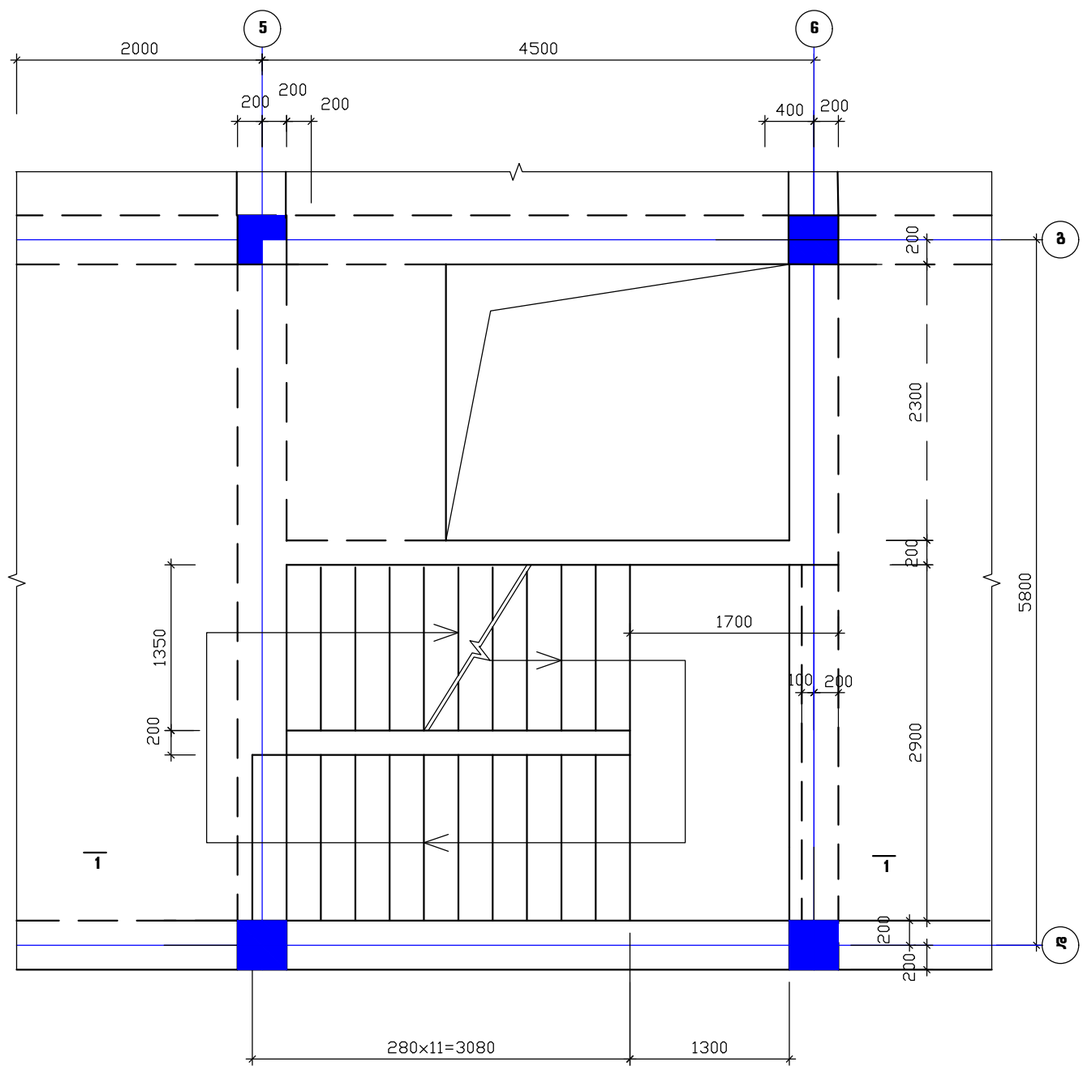


| | | | | | | | |
|---|---|---|---|---|---|---|---|
| თბილისი. ბაგებზი. წყნეთის გზატკეცილის №40-40ა ს/კ. 01.14.08.001.600 მრავალბინიანი სასხოვრებელი სახლის პროექტი | | | | კიბე კბ-1.უჯრედის გეგმა ნიშნ. 3.3-13.20 | | | 2023 წ. |
| დირექტორი | გ.ბაშველი | | | ფურც. № | რაოდენ. | მასშტ. | დაკვ. № |
| | | | | კ -37 | | 1:50 | |
| კონსტრუქტორი | ლორთქიფანიძე | | | დამკვეთი: | | | |
| | | | | შ.პ.ს. "მონოლითი+" | | | |
| | | | | | | | |

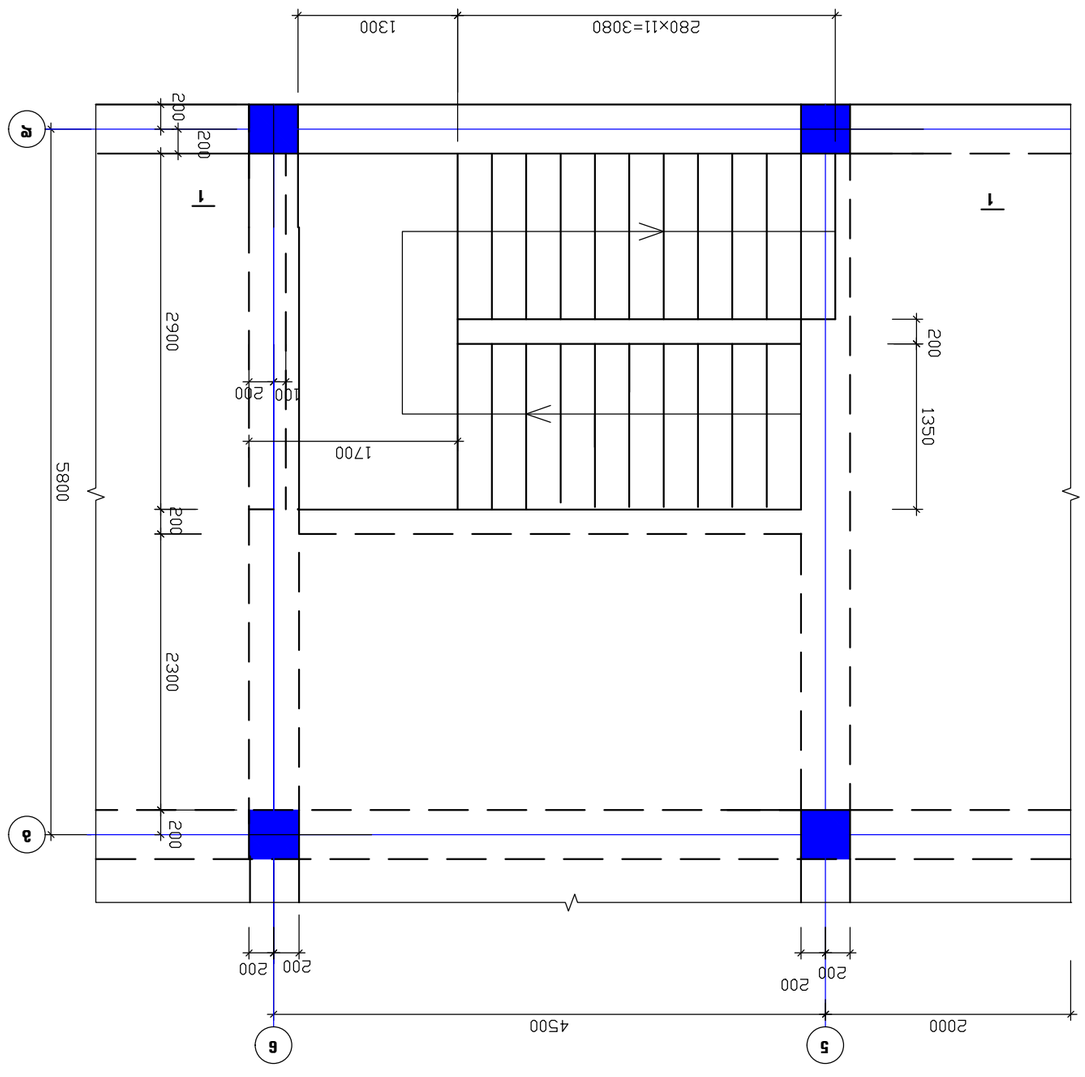


Этаж 2-й. Лестница 1-3 Б-Г. 16.50
31:50

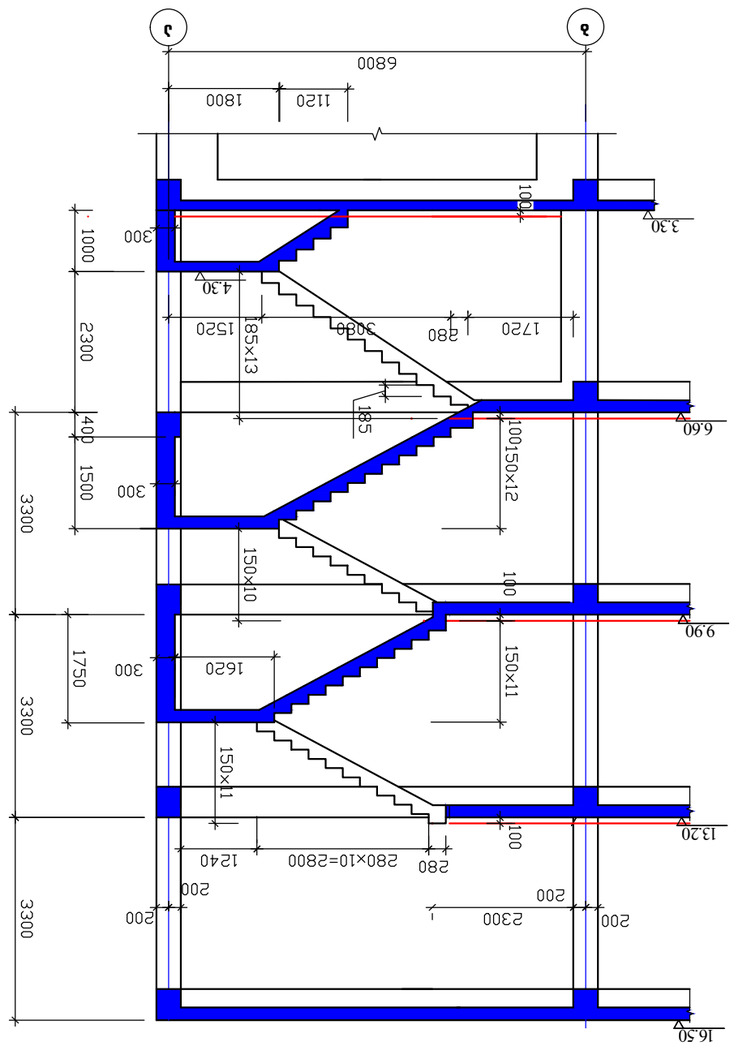


Этаж 2-й. Лестница 2-2
31:100

| | | | | | |
|---|---|---|---|---|---|
| Типовой блок. Блок лестничный №40-40/5 | | | | | |
| Б/Э. 01.14.08.001.600 Электрооборудование. Блок лестничный | | | | | |
| Изм. | Кол. уч. | Лист | № док. | Подп. | Дата |
| Разработал | Фомичева | | | | 2023 г. |
| Проверил | Ковалева | | | Этаж 2-й. Лестница 1-3 Б-Г. Этаж 2-й. Лестница 2-2 | |
| Н. контр. | Ковалева | | | Стадия | Лист | Листов |
| Утвердил | Ковалева | | | Р | 1 | 50 |
| Копировал | | Формат А3 | | | | |

კიბე კბ-1. ჭრილი 1-1
მ1:100

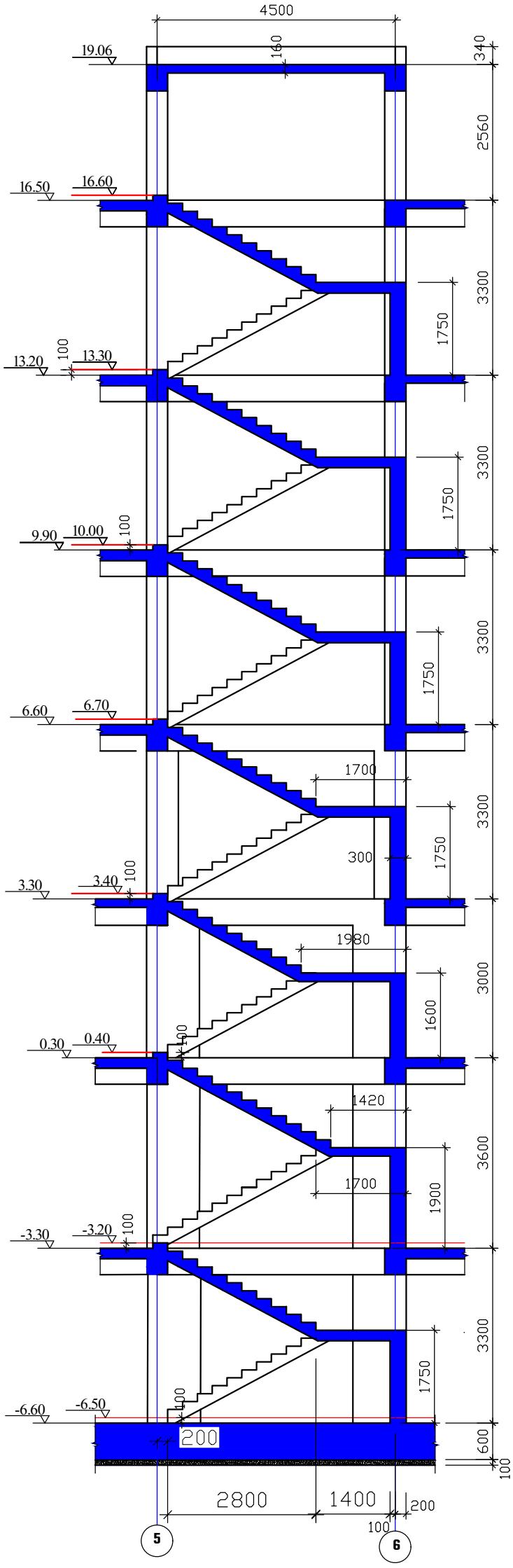


კიბე კბ-3. ჭრილი 3-3
მ1:100

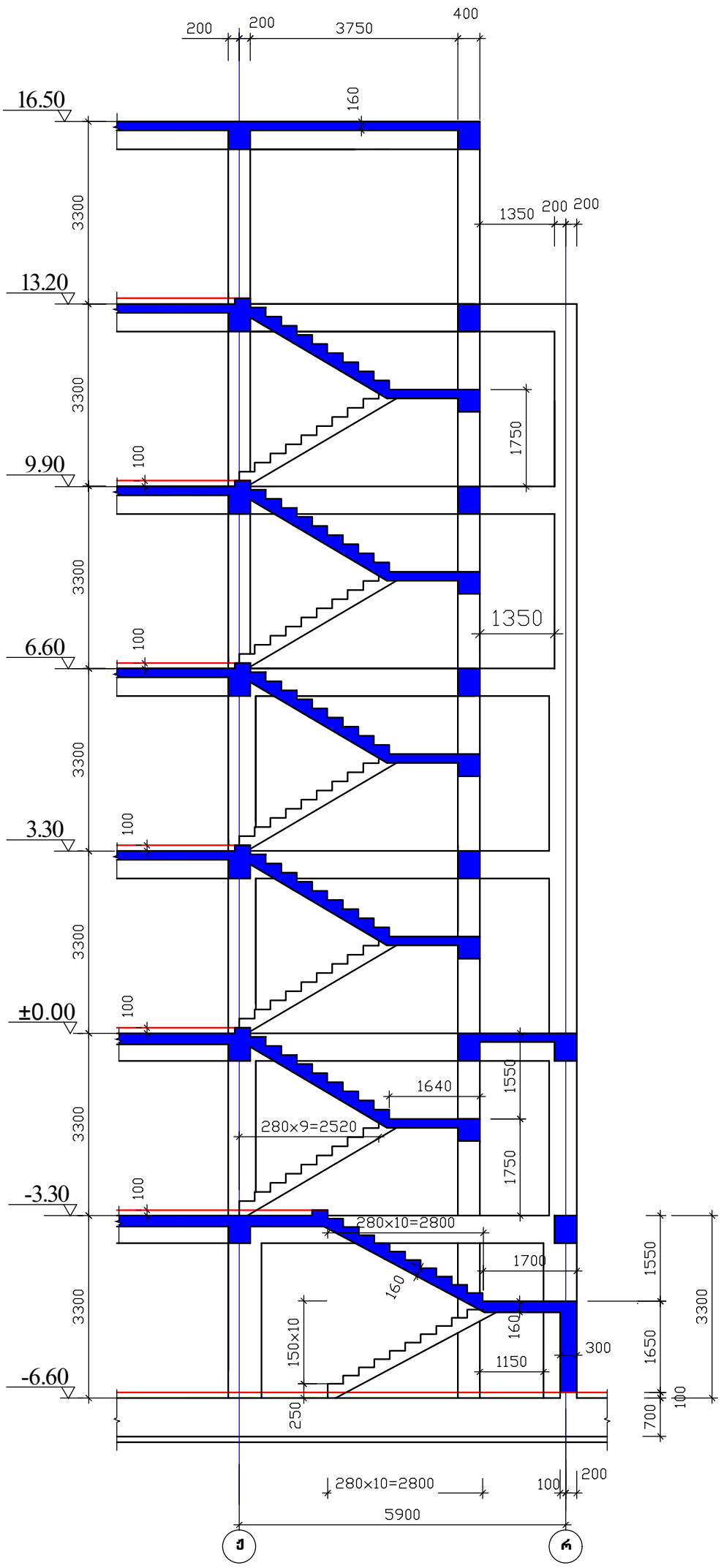


| | | | | | | | |
|---|---|---|---|---|---|---|---|
| თბილისი. ბაგები. წყნეთის გზატკეცილის №40-40ა ს/კ. 01.14.08.001.600 მრავალბინიანი საცხოვრებელი სახლის პროექტი | | | | კიბე კბ-1. კიბე კბ-3. ჭრილი 1-1-3-3 | | | 2023 წ. |
| დირექტორი | გ.იაშვილი | | | ფურც. № | რაოდენ. | მასშტ. | დაკვ. № |
| | | | | კ -39 | | 1:100 | |
| კონსტრუქტორი | ლორთქიფანიძე | | | დამკვეთი: | | | |
| | | | | შ.პ.ს. "მონოლითი+" | | | |
| | | | | | | | |

## კიბე კბ-3. უჯრედის გეგმა ნიშნ. -6.60
მ1:100

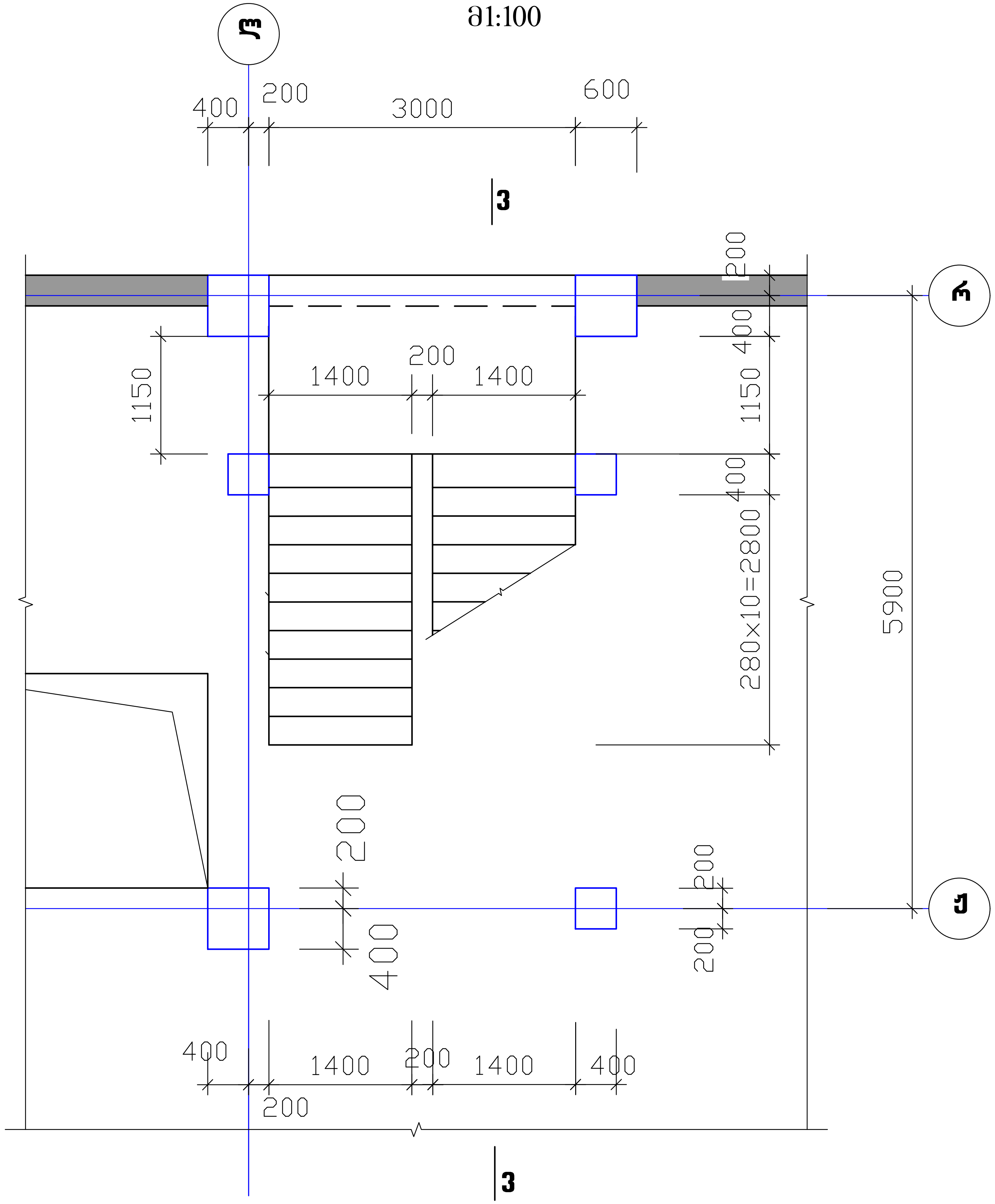


## კიბე კბ-3. უჯრედის გეგმა ნიშნ. -3.30
მ1:100

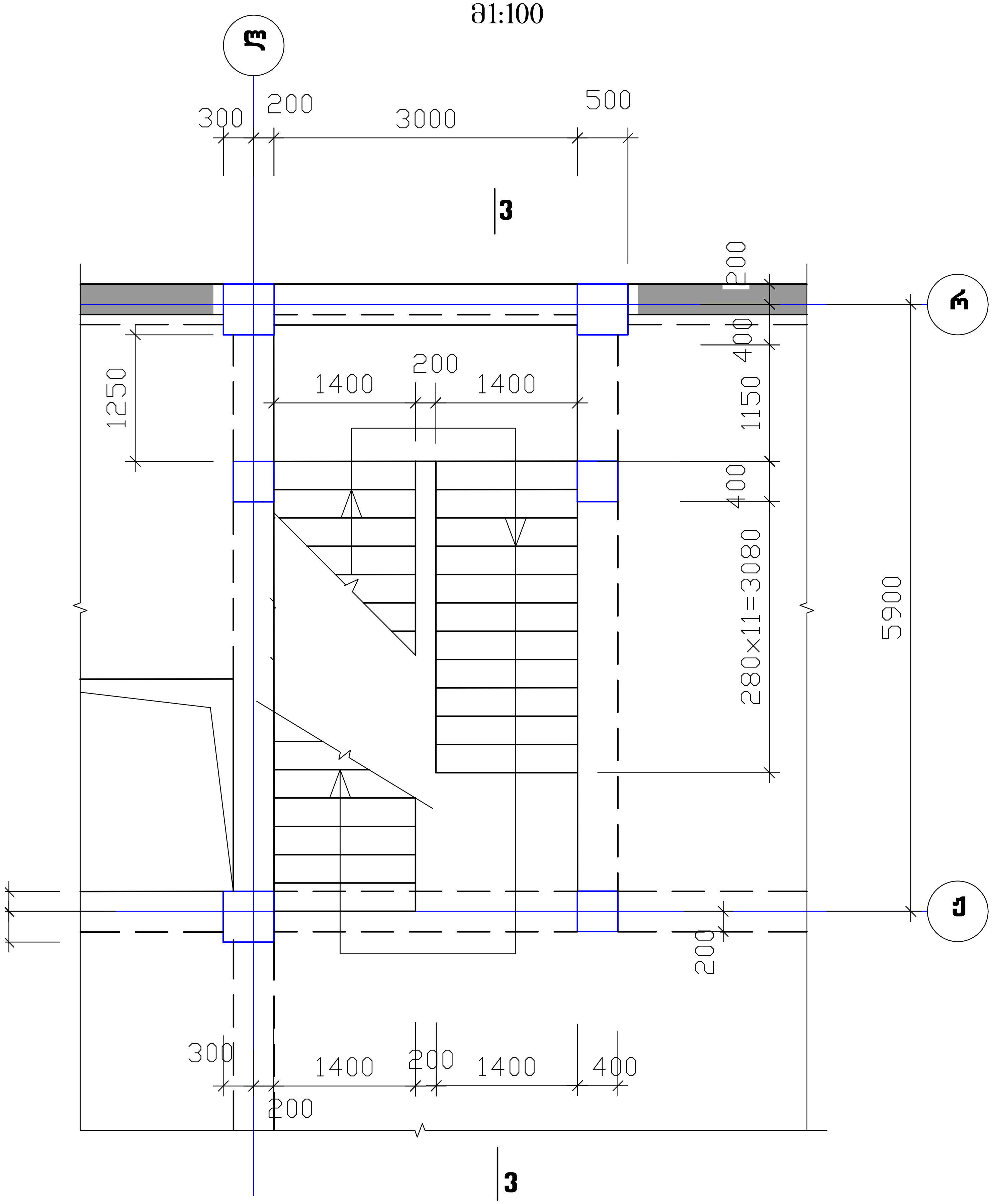


| | | | | | | | |
|---|---|---|---|---|---|---|---|
| თბილისი. ბაგები. წყნეთის გზატკეცილის №40-40ა ს/კ. 01.14.08.001.600 მრავალბინიანი საცხოვრებელი სახლის პროექტი | | | | კიბე კბ-3.უჯრედის გეგმა ნიშნ. -6.60 და -3.30 | | | 2023 წ. |
| დირექტორი | გ.იაშვილი | | | ფურც. № | რაოდენ. | მასშტ. | დაკვ. № |
| | | | | კ -40 | | 1:50 1:20 | |
| კონსტრუქტორი | ლორთქიფანიძე | | | დამკვეთი: | | | |
| | | | | შ.პ.ს. "მონოლითი+" | | | |
| | | | | | | | |

## კიბე კბ-3. შჯრედის გეგმა ნიშნ. ±0.00
მ1:100

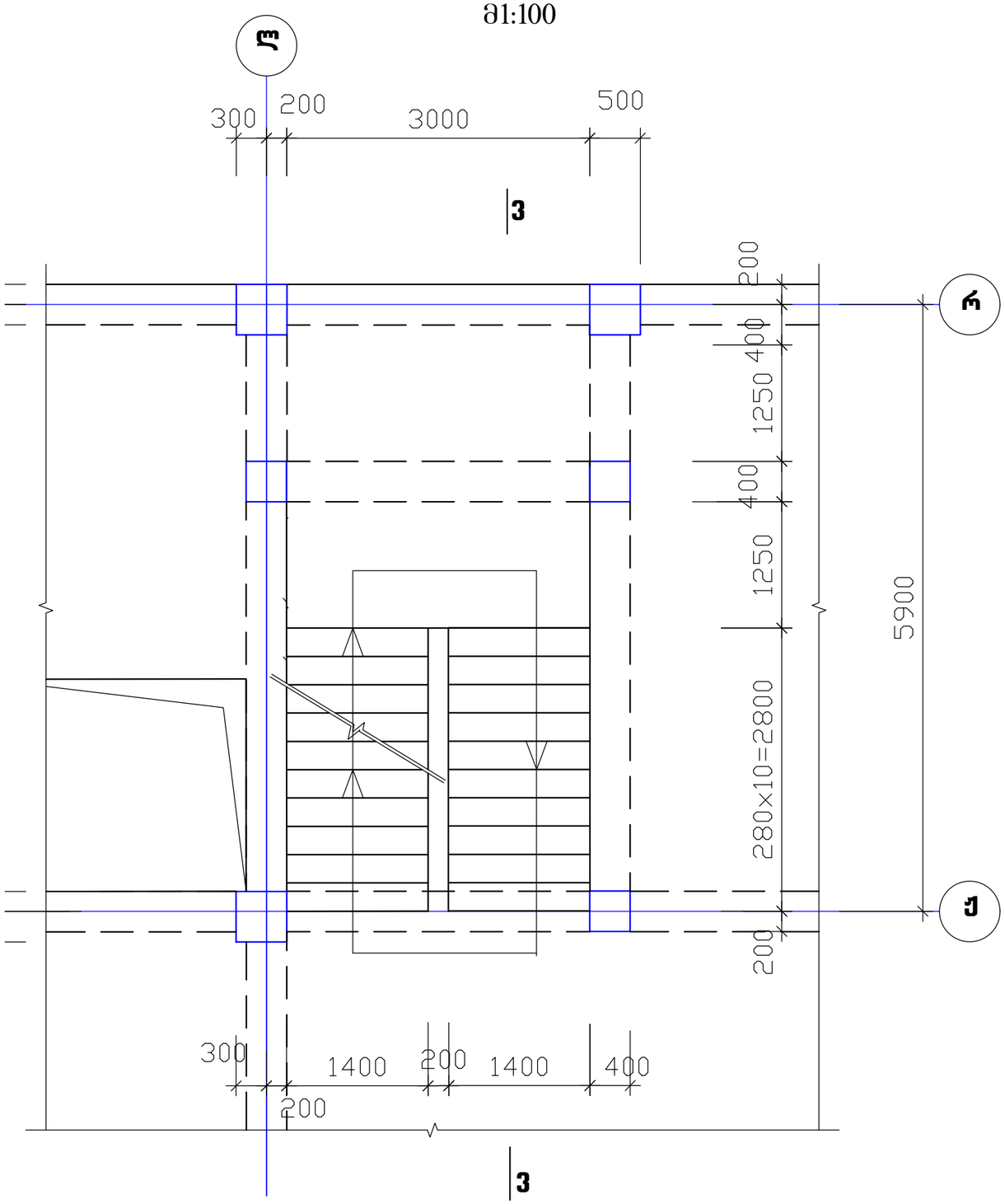


## კიბე კბ-3. შჯრედის გეგმა ნიშნ. 3.30
მ1:100

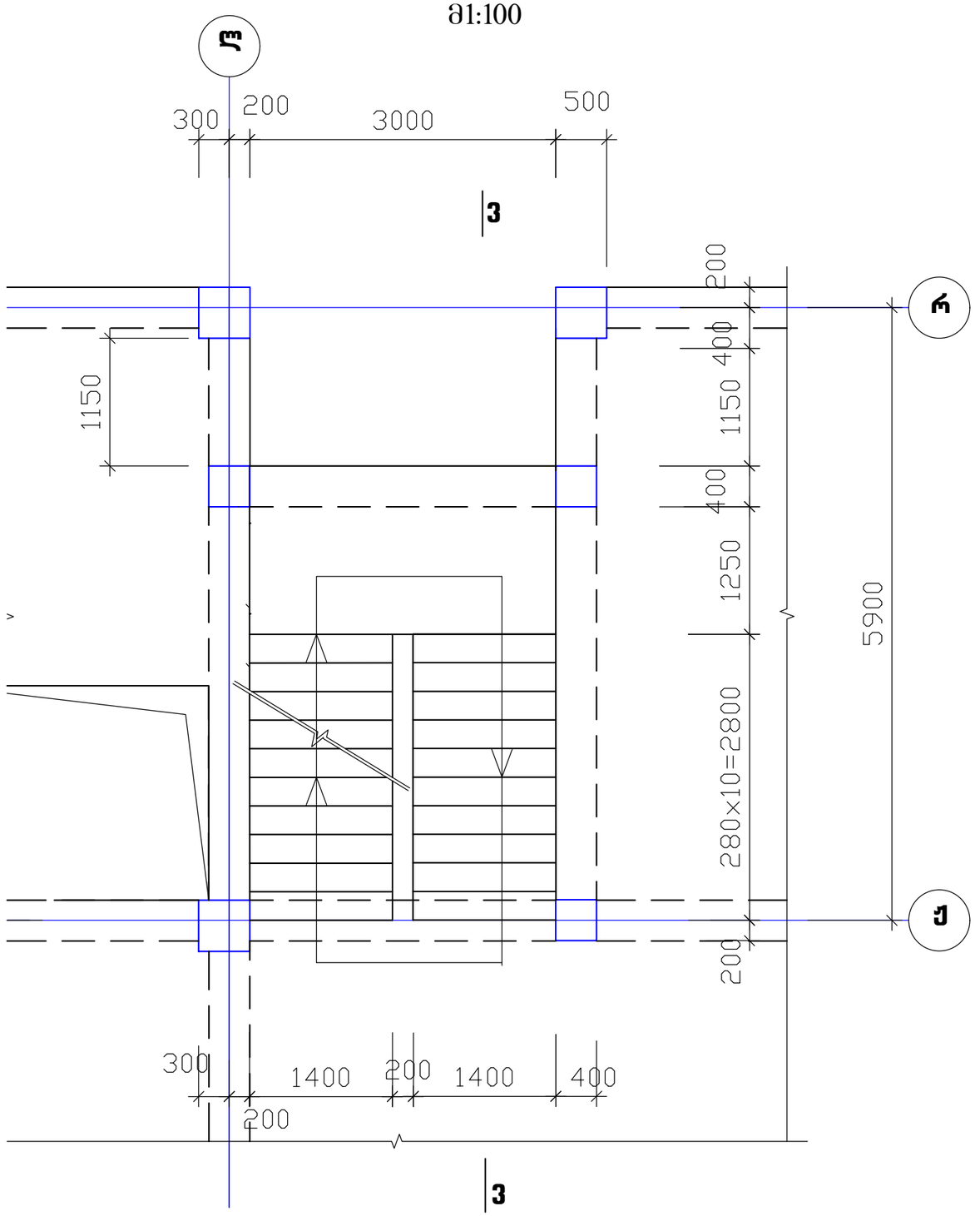


| | | | | | | | |
|---|---|---|---|---|---|---|---|
| მიბილისი. ბაბეები. წყნეთის გზაბკეცილის №40-40ა ს/კ. 01.14.08.001.600 მრავალბინიანი საცხოვრებელი სახლის პროექტი | | | | კიბე კბ-3.შჯრედის გეგმა ნიშნ. ±0.00 და 3.30 | | | 2023 წ. |
| დირექტორი | გ.იაშვილი | | | ფურც. № | რაოდენ. | მასშტ. | დაკვ. № |
| | | | | კ -41 | | 1:10 | |
| კონსტრუქტორი | ლორთქიფანიძე | | | დამკვეთი: | | | |
| | | | | შ.პ.ს. "მონოლითი+" | | | |

კიბე კბ-3. შჯრედის გეგმა ნიშნ. 6.60, 9.90
მ1:100

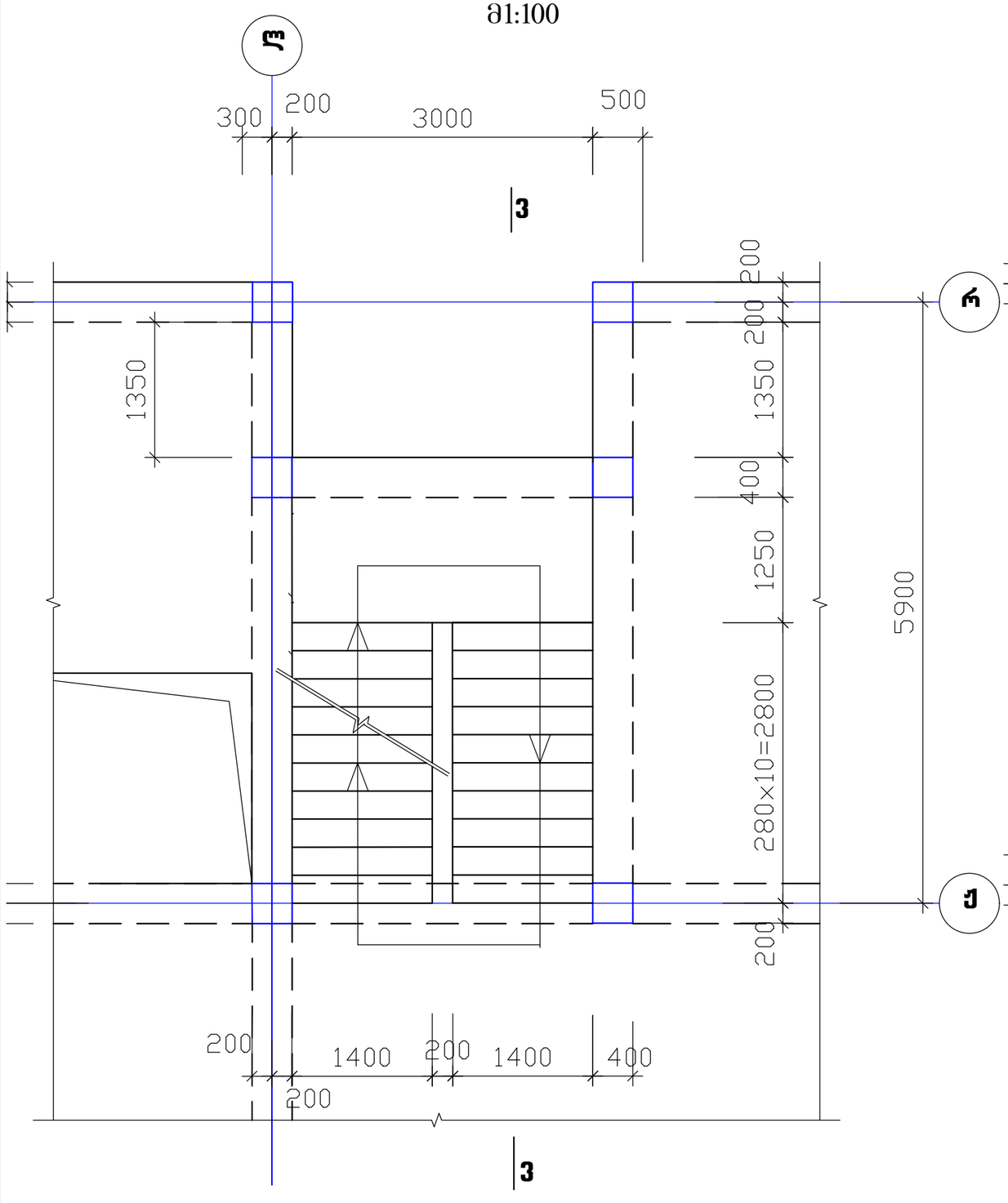


კიბე კბ-3. შჯრედის გეგმა ნიშნ. 13.20
მ1:100

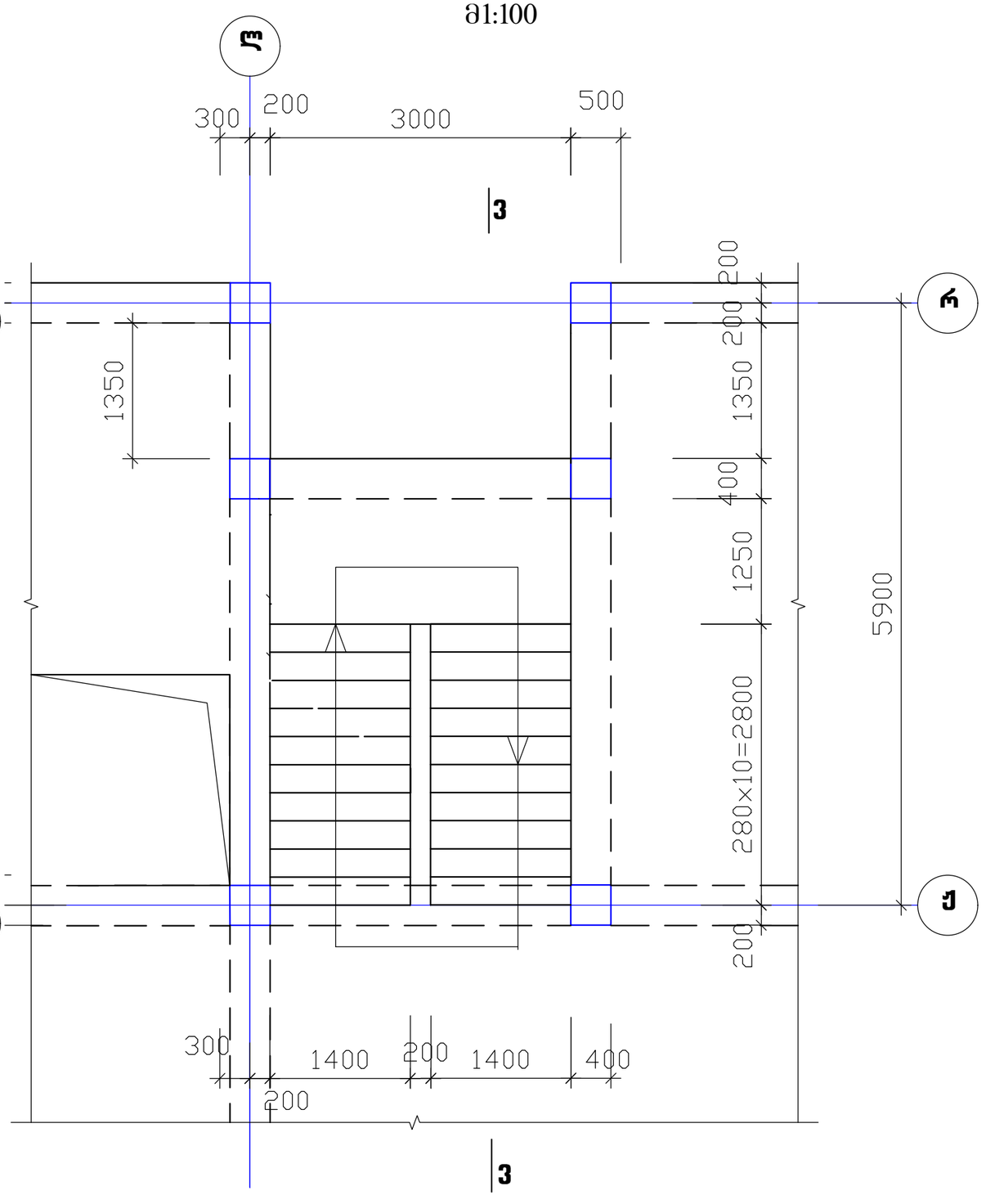


| | | | | | | | |
|---|---|---|---|---|---|---|---|
| თბილისი. ბაგებო. წყნეთის გზატკეცილის №40-40ა ს/კ. 01.14.08.001.600 მრავალბინიანი საცხოვრებელი სახლის პროექტი | | | | კიბე კბ-3.შჯრედის გეგმა ნიშნ. 6.60 9.90 და 13.20 | | | 2023 წ. |
| დირექტორი | გ.იაშვილი | | | ფურც. № | რაოდენ. | მასშტ. | ნაკვ. № |
| | | | | კ -42 | | 1:50 | |
| კონსტრუქტორი | ლ.ონოქიშვანიძე | | | დამკვეთი: | | | |
| | | | | შ.პ.ს. "მონოლითი+" | | | |
| | | | | | | | |

კიბე კბ-2. უჯრედის გეგმა ნიშნ. 3.30
მ1:100

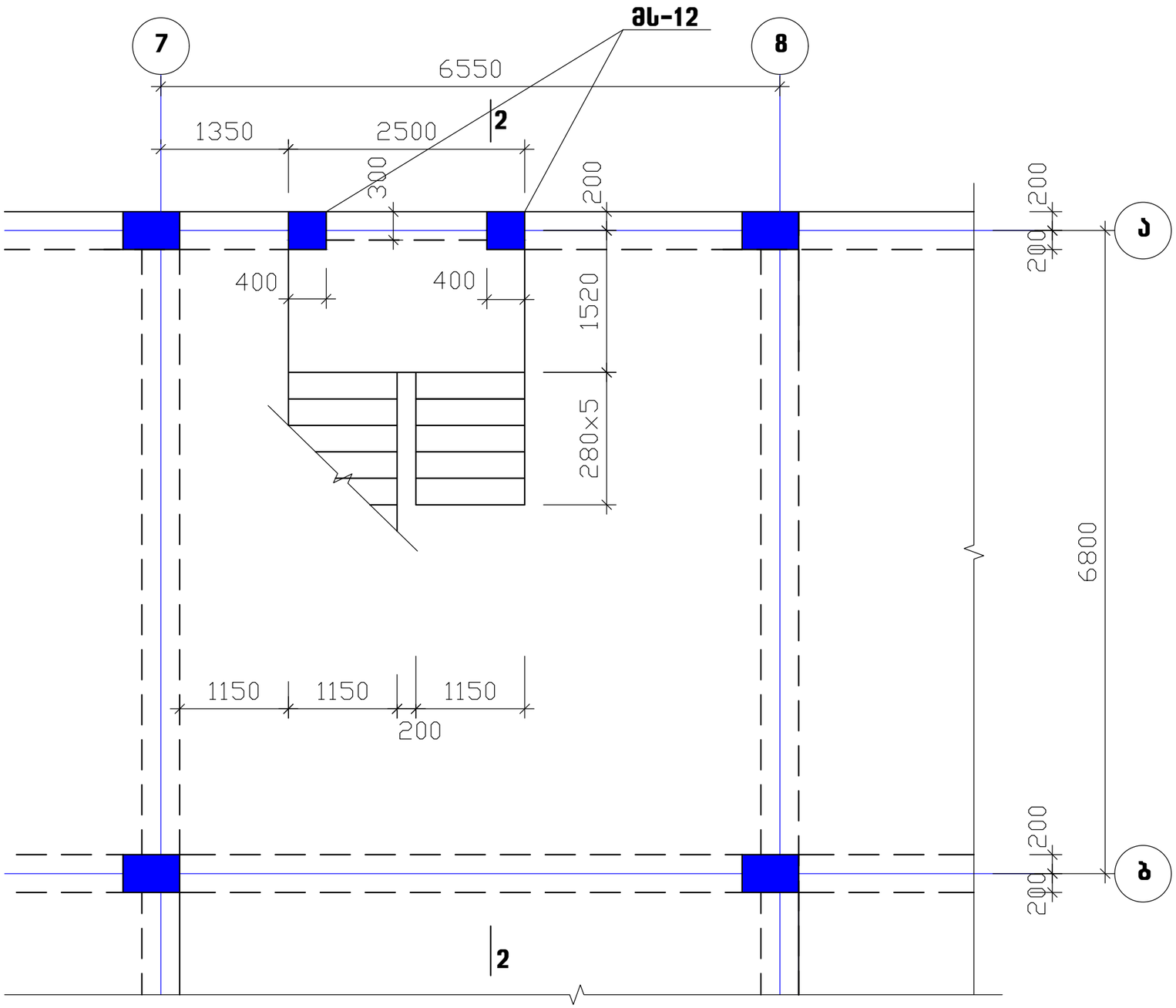


| | | | | | | | |
|---|---|---|---|---|---|---|---|
| თბილისი. ბაგები. წყნეთის ზგაბკეცილის №40-40ა ს/კ. 01.14.08.001.600 მრავალბინიანი საცხოვრებელი სახლის პროექტი | | | | კიბე კბ-2.უჯრედის გეგმა ნიშნ. 3.30 | | | 2023 წ. |
| დირექტორი | გ.იაშვილი | | | ფურც. № | რაოდენ. | მასშტ. | დაკვ. № |
| | | | | კ -43 | | 1:50 1:20 | |
| კონსტრუქტორი | ლორთქიფანიძე | | | დამკვეთი: | | | |
| | | | | შ.პ.ს. "მონოლითი+" | | | |
| | | | | | | | |

## კიბე კბ-2. უჯრედის გეგმა ნიშნ. 6.60, 9.90
მ1:100

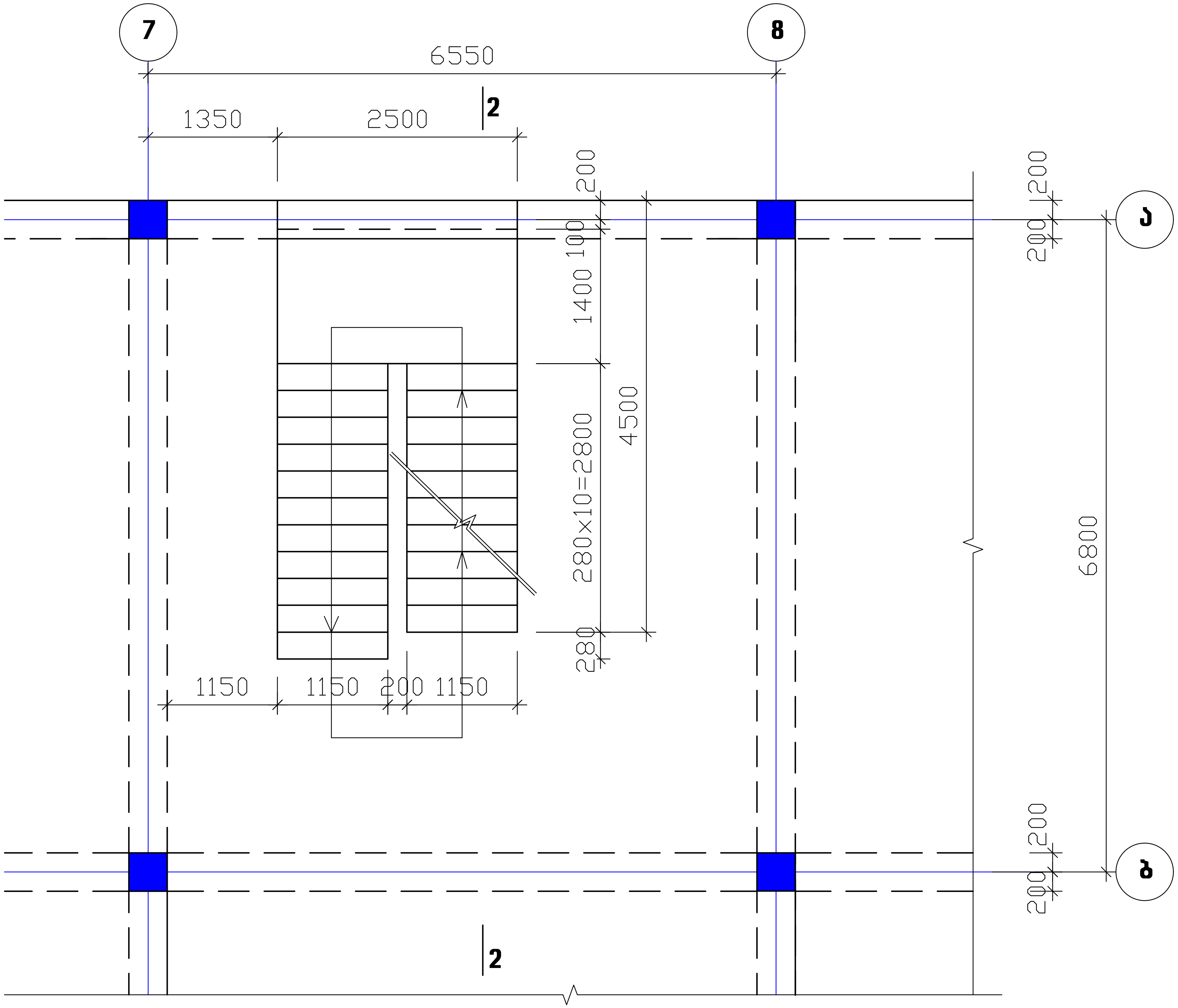


| | | | | | | | |
|---|---|---|---|---|---|---|---|
| თბილისი. ბაგები. წყნეთის გზატკეცილის №40-40ა ს/კ. 01.14.08.001.600 მრავალბინიანი საცხოვრებელი სახლის პროექტი | | | | კიბე კბ-2.უჯრედის გეგმა ნიშნ. 6.60 და 9.90 | | | 2023 წ. |
| დირექტორი | გ.იაშვილი | | | ფურც. № | რაოდენ. | მასშტ. | დაკვ. № |
| | | | | კ -44 | | 1:10 | |
| კონსტრუქტორი | ლორთქიფანიძე | | | დამკვეთი: | | | |
| | | | | შ.პ.ს. "მონოლითი+" | | | |
| | | | | | | | |

# კიბე კბ-2. უჯრედის გეგმა ნიშნ. 13.20
მ1:100

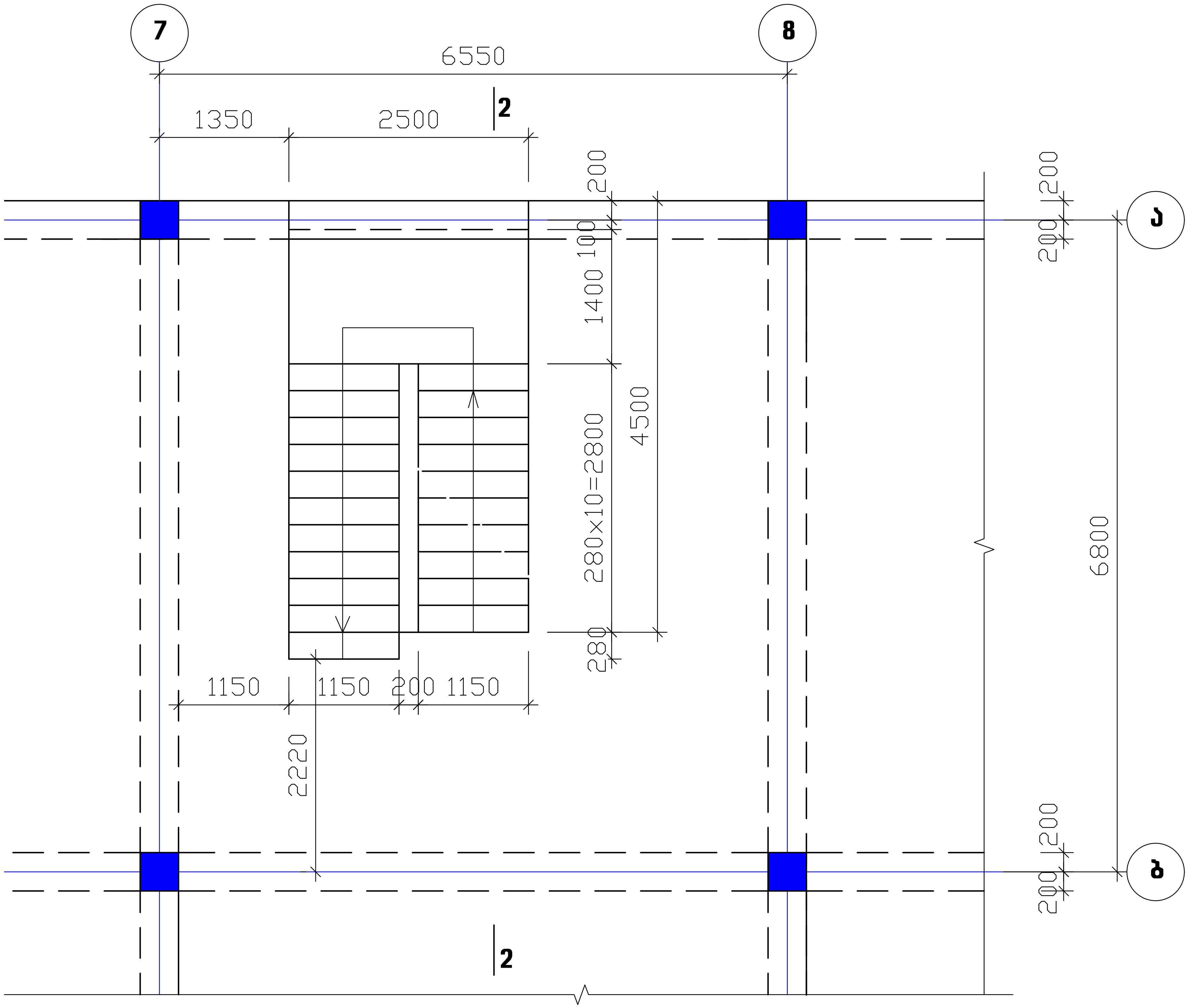


| | | | | | | | |
|---|---|---|---|---|---|---|---|
| თბილისი. ბაგები. წყნეთის გზატკეცილის №40-40ა ს/კ. 01.14.08.001.600 მრავალბინიანი საცხოვრებელი სახლის პროექტი | | | | კიბე კბ-2.უჯრედის გეგმა ნიშნ. 13.20 | | | 2023 წ. |
| დირექტორი | გ.იაშვილი | | | ფურც. № | რაოდენ. | მასშტ. | დაკვ. № |
| | | | | კ -45 | | 1:50 | |
| კონსტრუქტორი | ლორთქიფანიძე | | | დამკვეთი: | | | |
| | | | | შ.პ.ს. "მონოლითი+" | | | |
| | | | | | | | |

კ ვ ა ნ ძ ი "I"
(მონოლითური რიგელი)
მ. 1:25

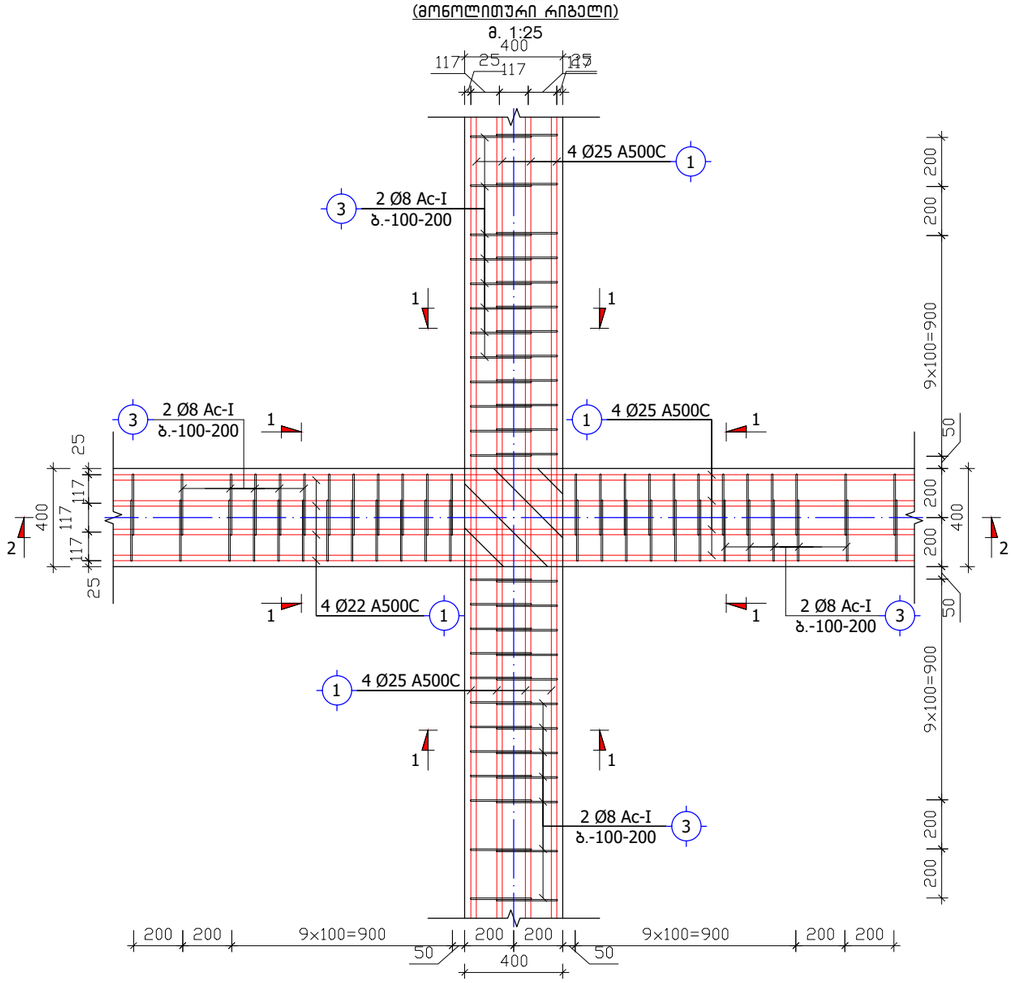


კ ვ ა ნ ძ ი "II"
(მონოლითური რიგელი)
მ. 1:25

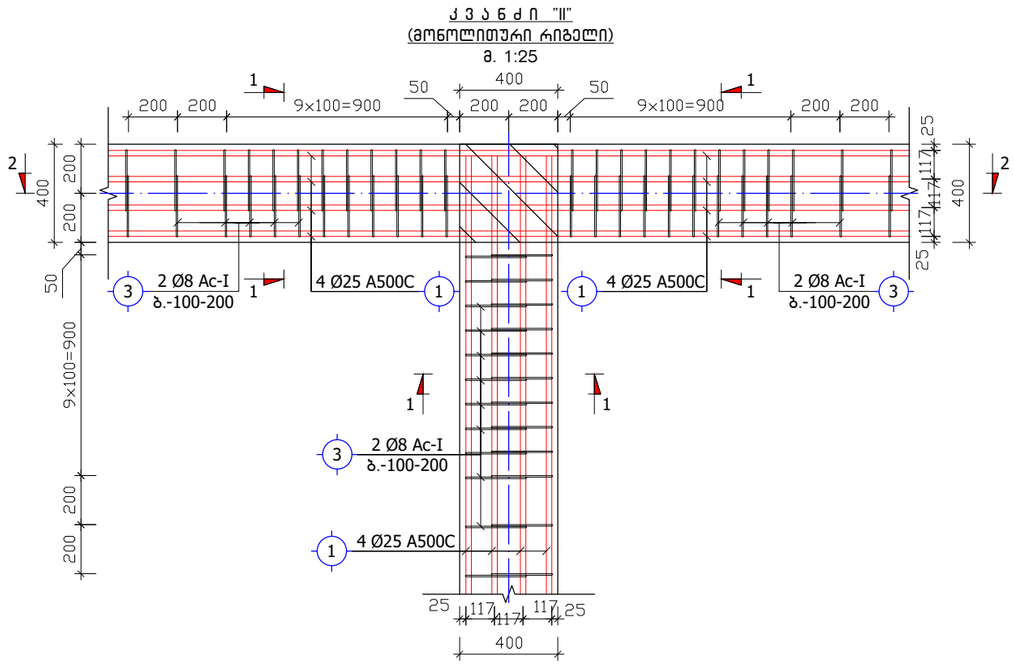


კ ვ ა ნ ძ ი "III"
(მონოლითური რიგელი)
მ. 1:25

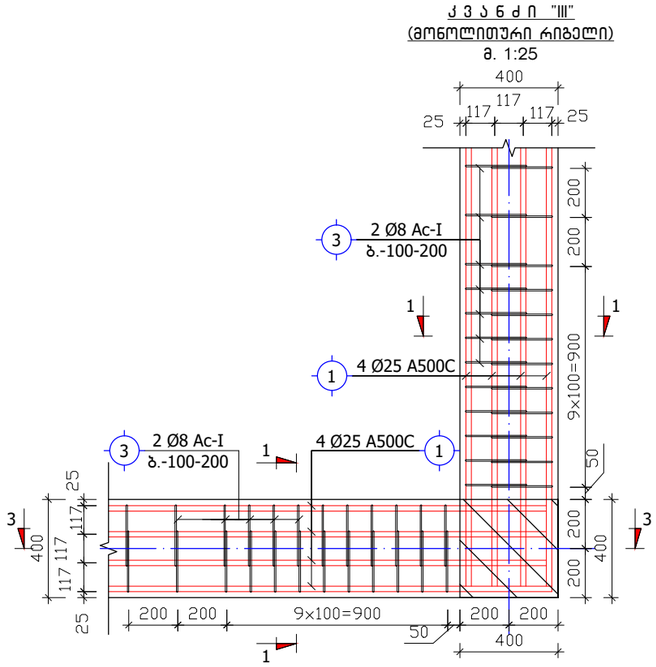


| | | | | | | | |
|---|---|---|---|---|---|---|---|
| თბილისი. ბაგები. წყნეთის გზატკეცილის №40-40ა ს/კ. 01.14.08.001.600 მრავალბინიანი საცხოვრებელი სახლის პროექტი | | | | რიგელების შეულღვების და არმირების ტიპური კვანძები | | | 2023 წ. |
| დირექტორი | გ.იაშვილი | | | შურც. № | რაოდენ. | მასშტ. | დაკვ. № |
| | | | | კ -46 | 33 | 1:25 | |
| შეასრულა | ლორთქიფანიძე | | | დამკვეთი: | | | |
| | | | | შ.პ.ს. "მონოლითი+" | | | |
| | | | | | | | |

## მონოლითური რიგელების დაარმირების ტიპიური ფრაგმენტი

მ 1:20

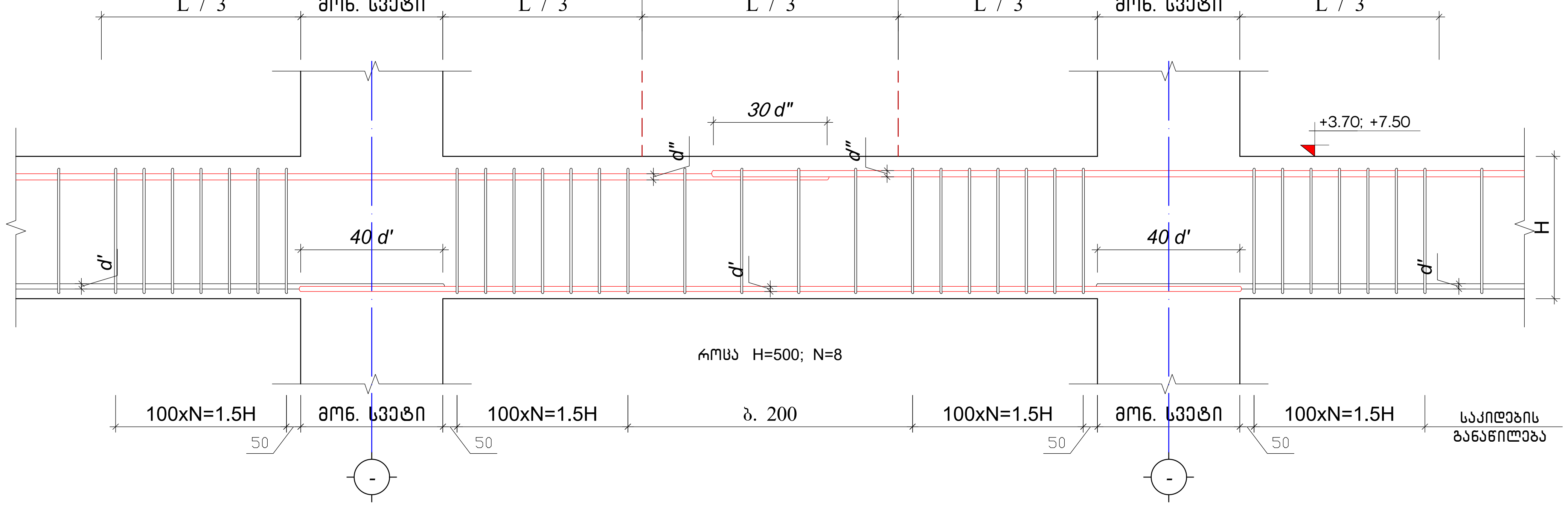


## მონოლუთური რიგელის სვეტთან ჩაანკერების ტიპიური ფრაგმენტი

მ 1:20

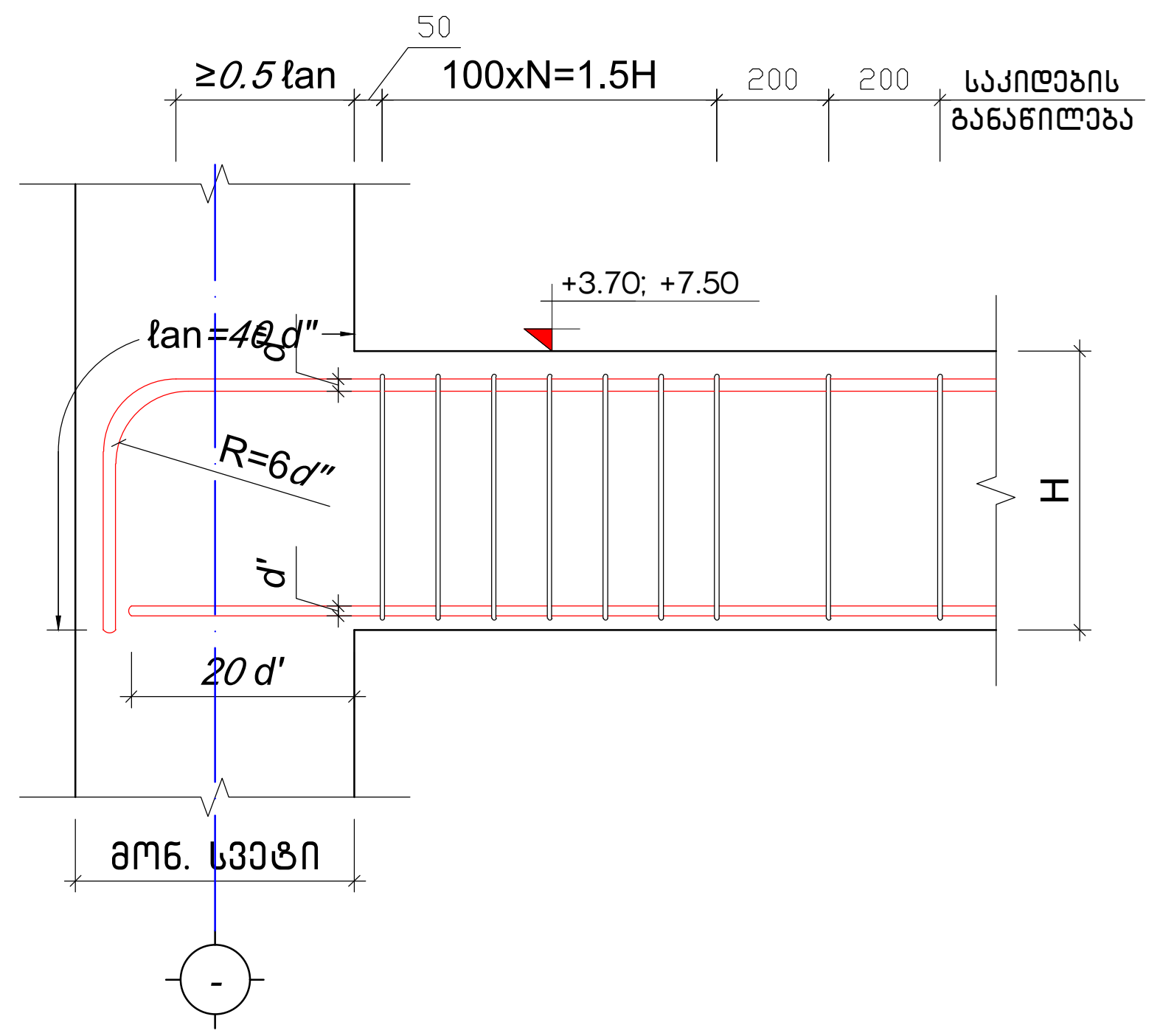


მ.რ.-1

მ. 1:10

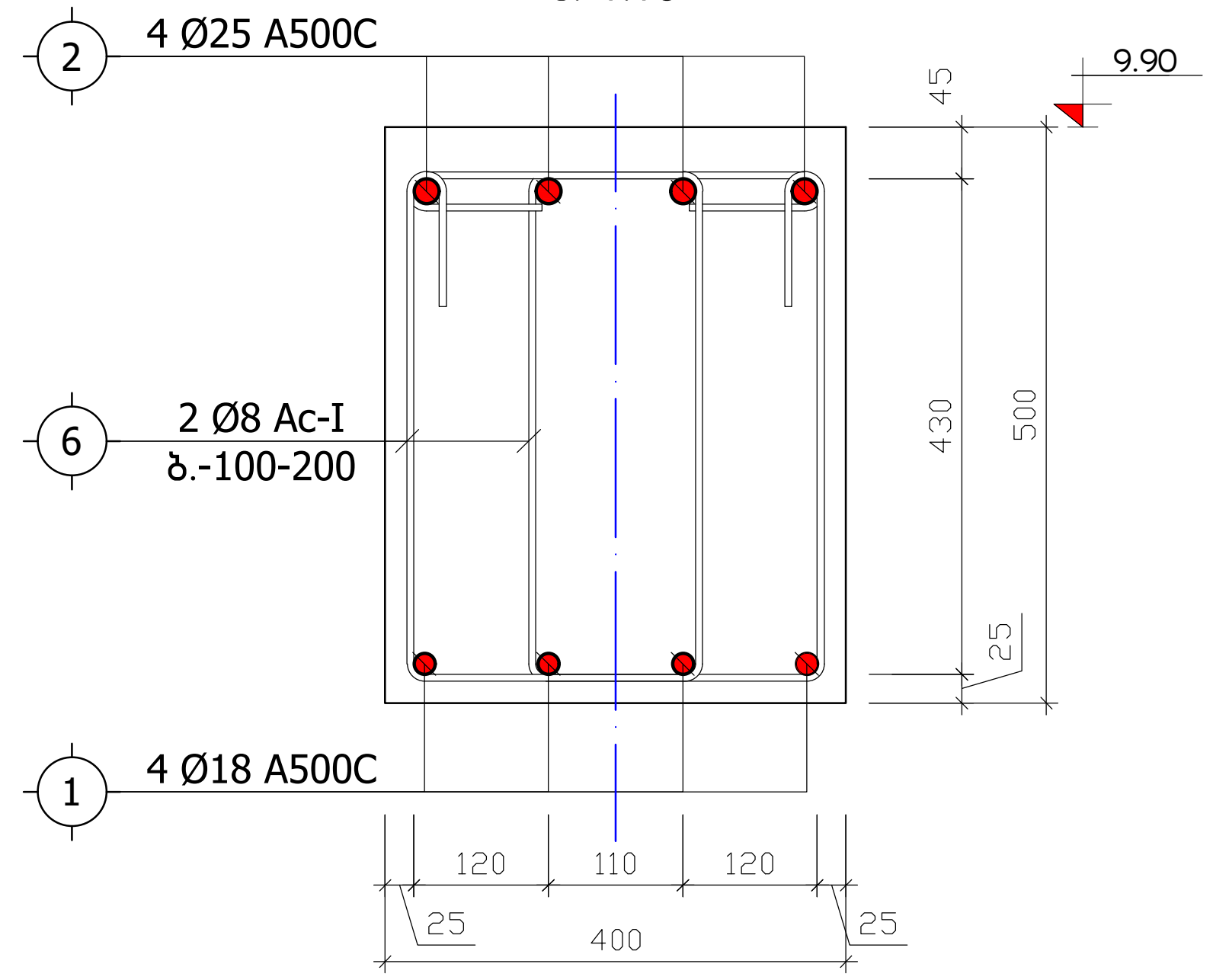


მ.რ.-2

მ. 1:10

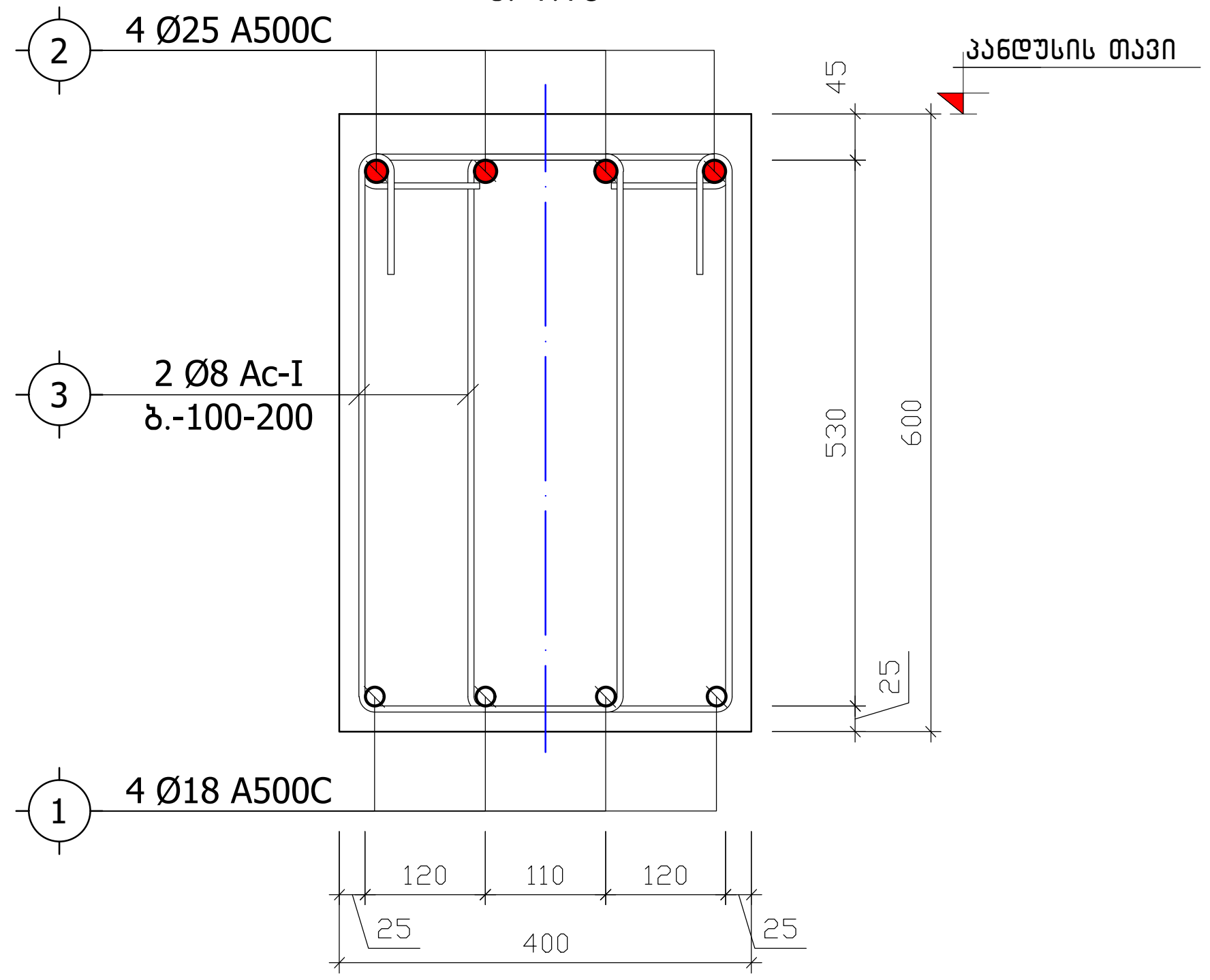


| | | | | | | | |
|---|---|---|---|---|---|---|---|
| თბილისი. ბაგები. წყნეთის გზატკეცილის №40-40ა<br>ს/კ. 01.14.08.001.600 მრავალბინიანი საცხოვრებელი სახლის პროექტი | | | | რიგელების შეუღლების და არმირების ტიპიური კვანძები. რიგელები მრ-1 და მრ-2 | | | 2023 წ. |
| დირექტორი | გ.იაშვილი | | | ფურც. № | რაოდენ. | მასშტ. | დაკვ. № |
| | | | | კ-47 | | 1:20 1:10 | |
| შეასრულა | ლორთქიფანიძე | | | დამკვეთი: | | | |
| | | | | შ.პ.ს. "მონოლითი+" | | | |

## კ ვ ე თ ი 2-2
მ. 1:25

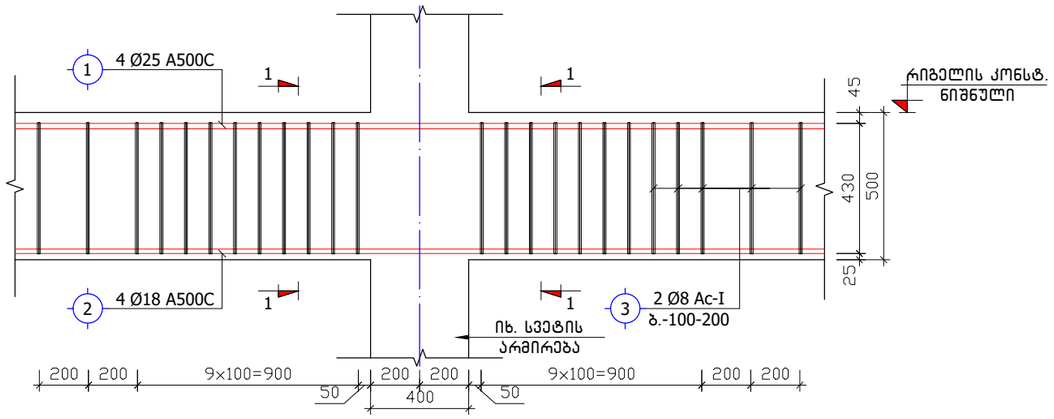


## კ ვ ე თ ი 3-3
მ. 1:25

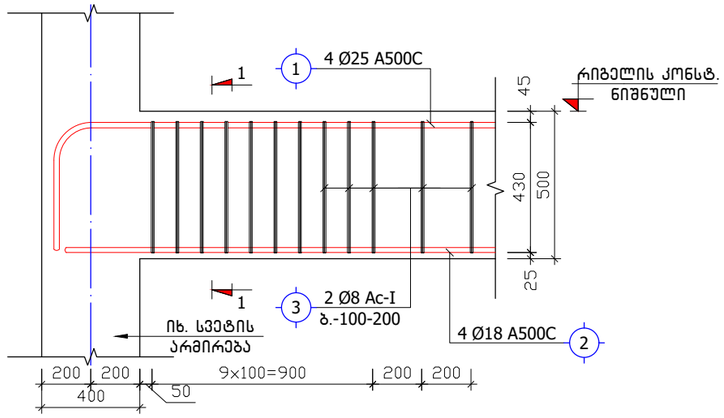


## მონოლითური რიგელი მ.რ.-4
მ. 1:10

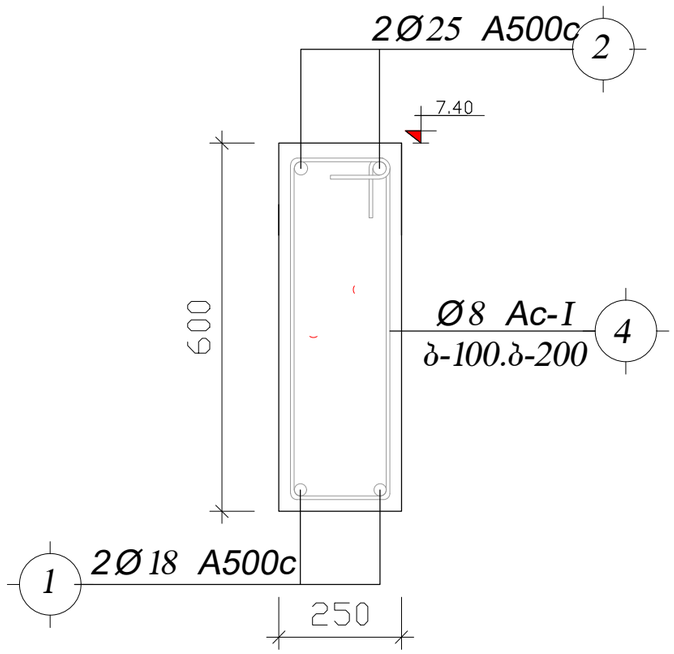


## მონოლითური რიგელი მ.რ.-3
მ. 1:10

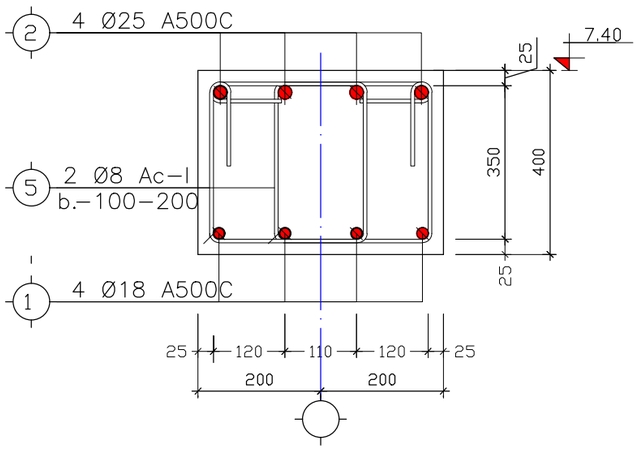


## ჯვეთი 2-2
მ: 1:20

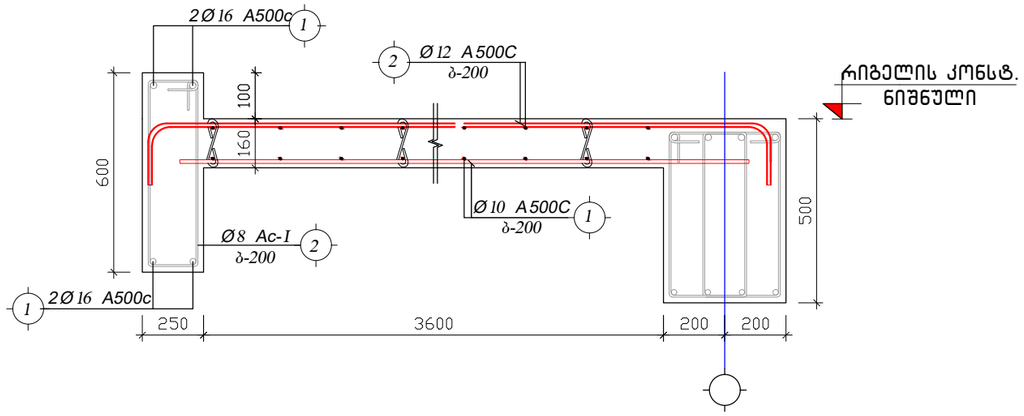


| | | | | | | | |
|---|---|---|---|---|---|---|---|
| თბილისი. ბაგები. წყნეთის მწყაზკეცილის №40-40ა ს/კ. 01.14.08.001.600 მრავალბინიანი სახსოვრებელი სახლის პროექტი | | | | რიგელების შეულღების და არმირების ტიპიური კვანძები. რიგელები მრ-3 და მრ-4 | | | 2023 წ. |
| დირექტორი | გ.ბაშვილი | | | ფურც. № | რაოდენ. | მასშტ. | დაკვ. № |
| | | | | კ -48 | | 1:20 1:10 | |
| შეასრულა | ლ.ლორთქიფანიძე | | | დამკვეთი: | | | |
| | | | | შ.პ.ს. "მონოლითი+" | | | |
| | | | | | | | |

## არმატურის ღეროების გადაბმის ტიპიური ფრაგმენტი გადახურვის ფილაში

მ 1:20

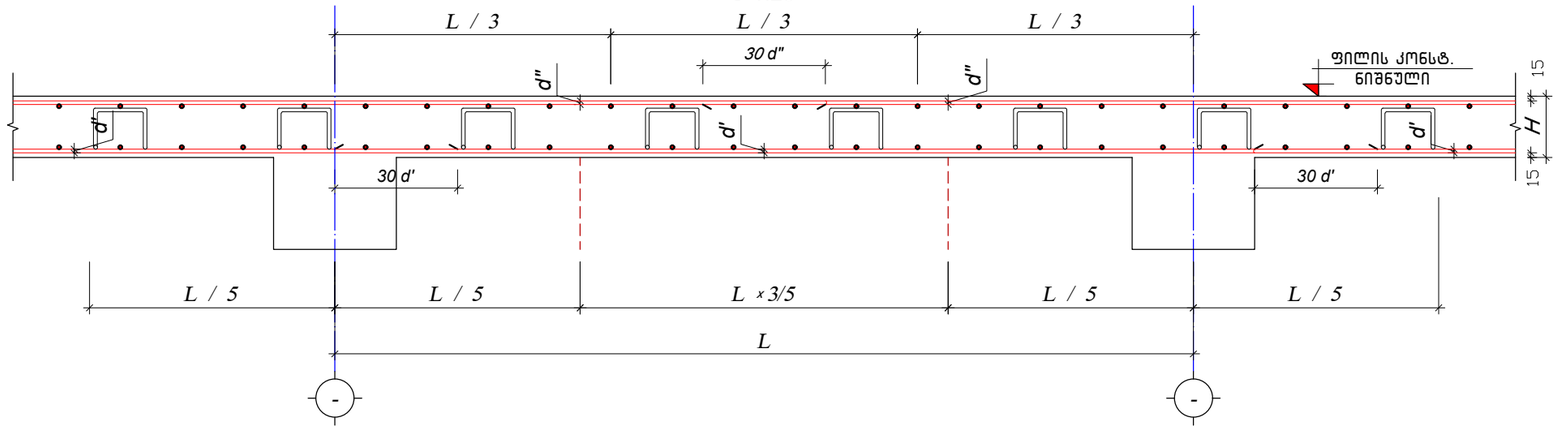


## მონოლითური ფილისა და კედლის შეერთების ფრაგმენტი

მ. 1:10

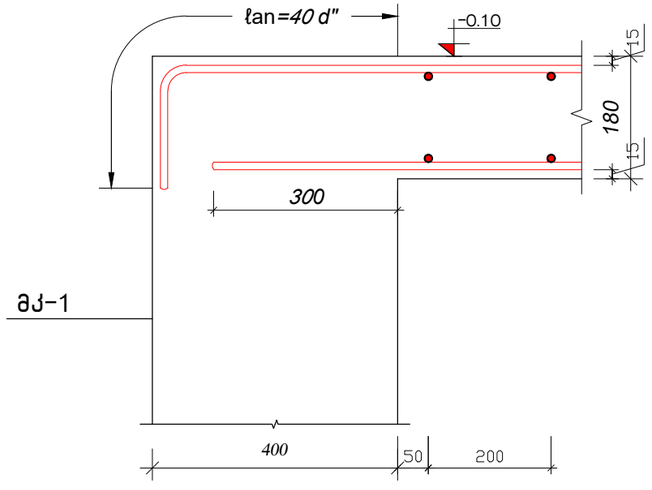


## მონოლითური ფილისა და რიგელის შეერთების ფრაგმენტი

მ. 1:10

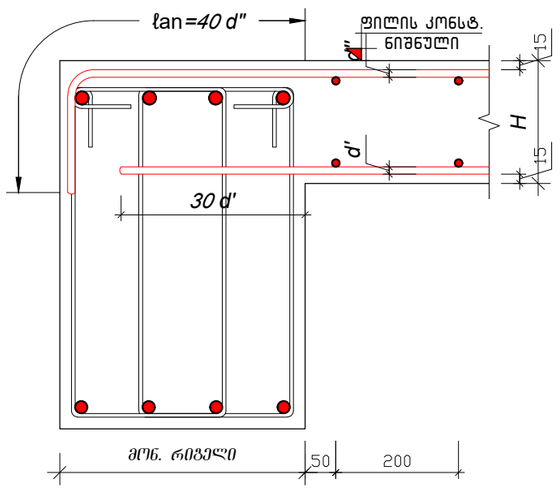


## სვრილების გარშემო არმატურით გაძლიერების ტიპიური ფრაგმენტი

მ 1:20

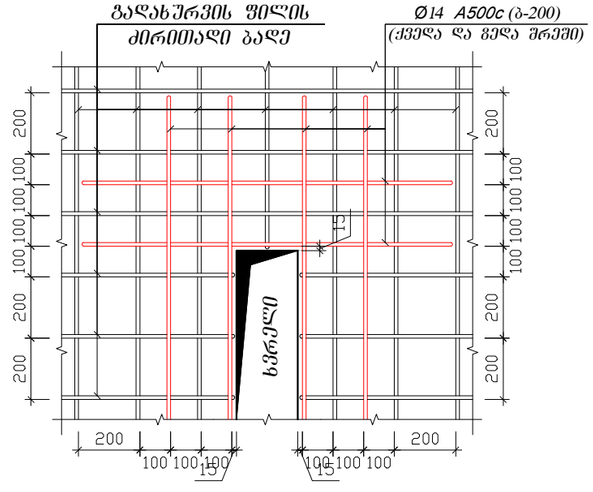


| | | | | | | | |
|---|---|---|---|---|---|---|---|
| თბილისი. ბაგები. წყნეთის მზიაჭკეცილის №40-40ა ს/კ. 01.14.08.001.600 მრავალბინიანი საცხოვრებელი სახლის პროექტი | | | | გადახურვის ფილის არმირების ტიპიური კვანძები. | | | 2023 წ. |
| დირექტორი | გ.იაშვილი | | | შურც. № | რაოდენ. | მასშტ. | დაკვ. № |
| | | | | კ -49 | | 1:20 1:10 | |
| შეასრულა | ლორთქიფანიძე | | | დამკვეთი: | | | |
| | | | | შ.პ.ს. "მრონოლითი+" | | | |
| | | | | | | | |

# ქვედა და ზედა შრეების ფიქსატორების მოწყობის სქემატური ნახაზი

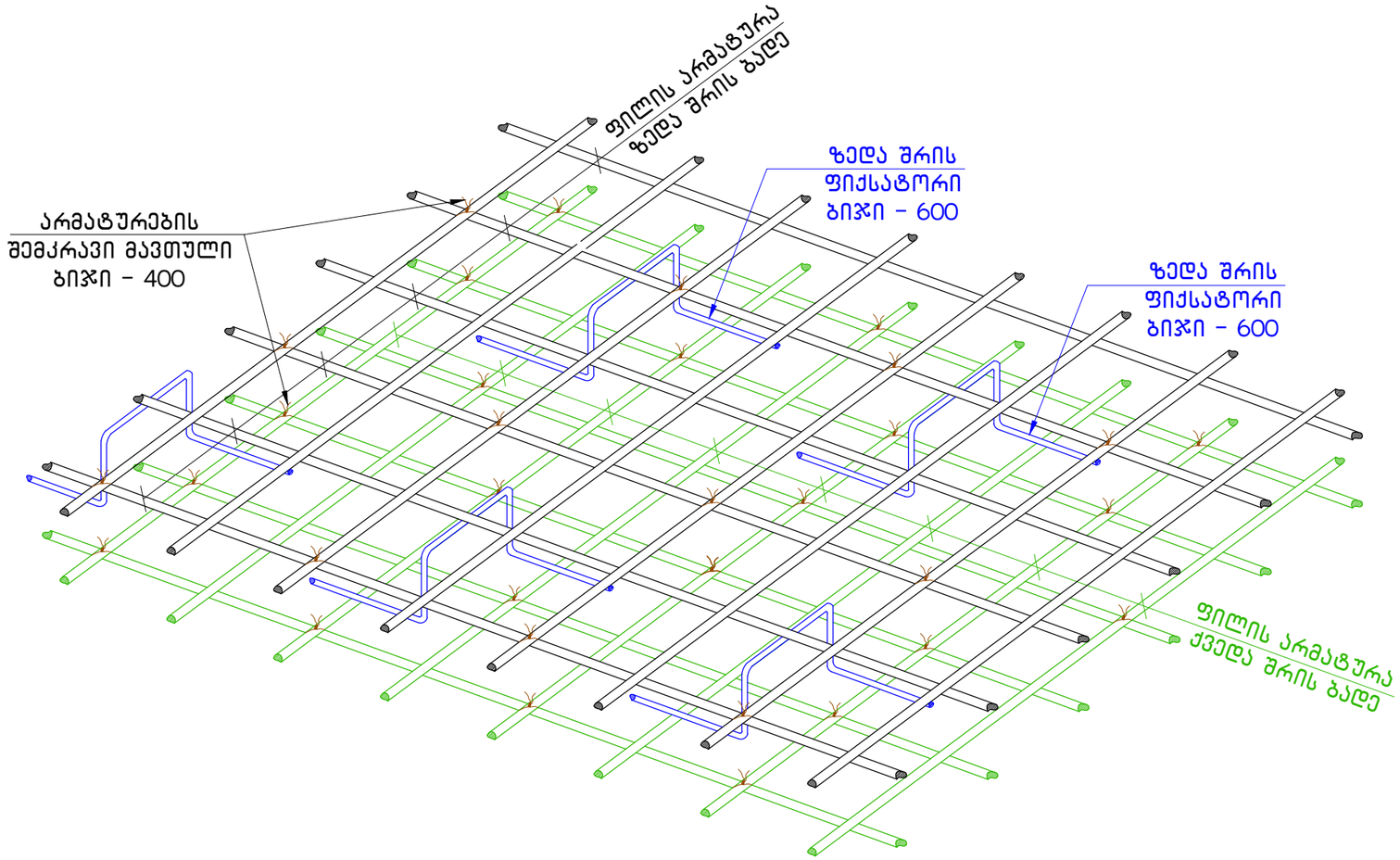


| | | | | | | | |
|---|---|---|---|---|---|---|---|
| თბილისი. ბაგები. წყნეთის გზატკეცილის №40-40ა ს/კ. 01.14.08.001.600 მრავალბინიანი საცხოვრებელი სახლის პროექტი | | | | გადახურვის ფილის არმირების ტიპიური კვანძები. | | | 2023 წ. |
| დირექტორი | გ.იაშვილი | | | ფურც. № | რაოდენ. | მასშტ. | ცვლ. № |
| | | | | კ -50 | | 1:20 | |
| შეასრულა | ლორთქიფანიძე | | | დამკვეთი: | | | |
| | | | | შ.პ.ს. "მონოლითი+" | | | |
| | | | | | | | |

| | | | | | |
|---|---|---|---|---|---|
| | | | | | |
| | | | | | |
| ვერტიკალური ელემენტი | | | | | |
| ფილა | | | | | |
| ფილის ტიპი და ნომერი | ბეტონის კლასი | | | | |
| | | | | | |
| | | | | | |
| | | | | | ვ.ა.ლ. "ენერგოპროექტი" |

| | | | | |
|---|---|---|---|---|
| ფილის ტიპი და ნომერი | ბეტონის კლასი | | | |
| | | | | |
| ვერტიკალური ელემენტი | | | | |
| | | | | |
| | | | | |
| | | | | |

| | | | | |
|---|---|---|---|---|
| | | | | |
| | | | | |
|

## მონოლითური რკინაბეტონის კედლების შეუღლების ტიპიური კვანძი

მ 1:20

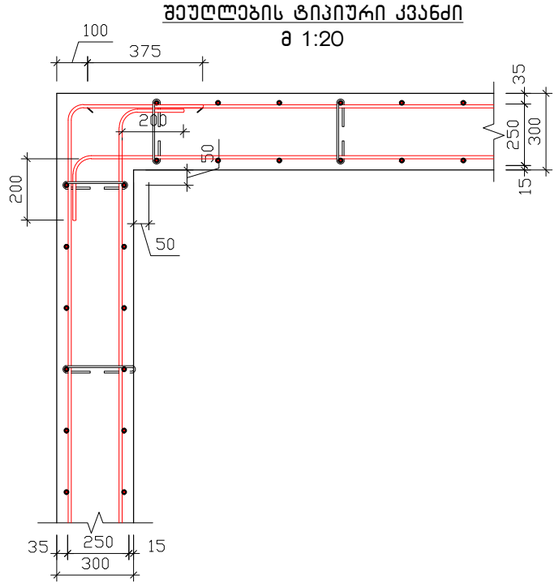


## პარაპეტის მოწყობის დეტალი

მ 1:20

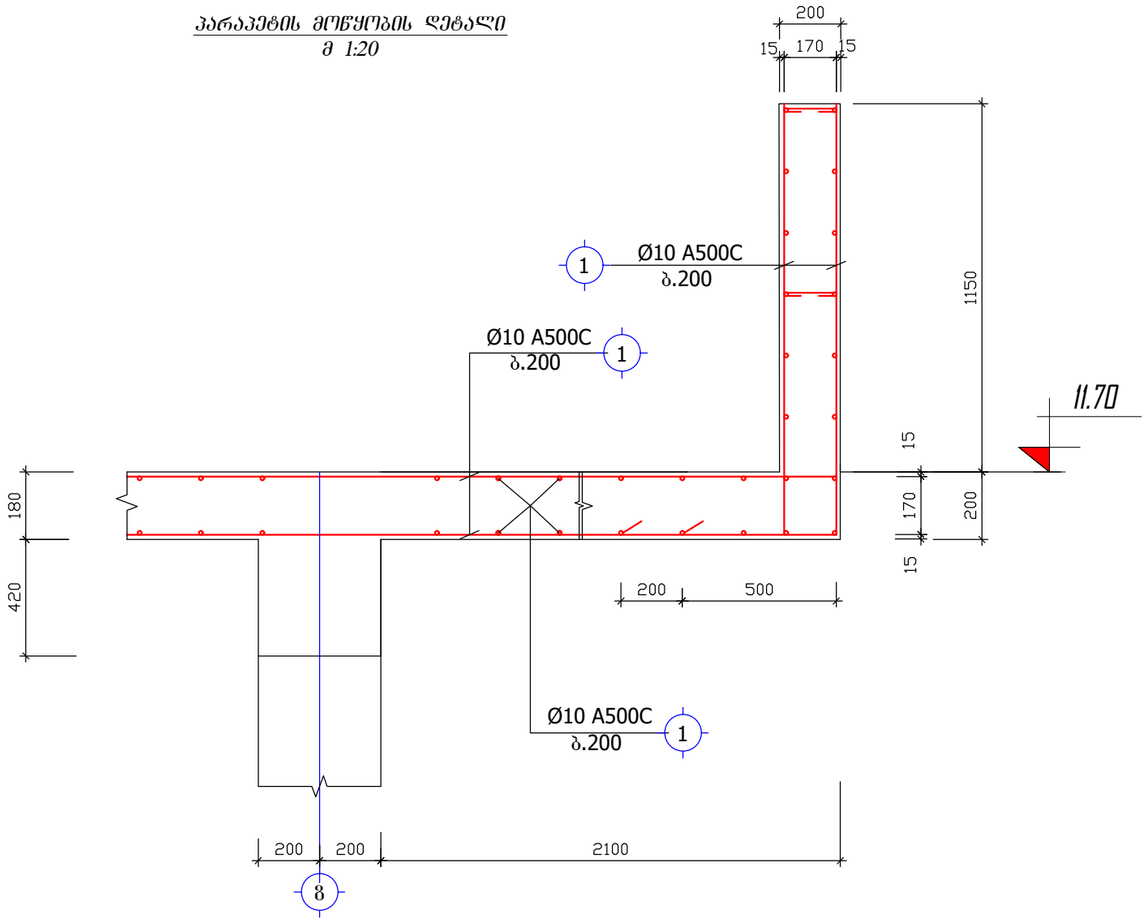


## პარაპეტის მოწყობის დეტალი

მ 1:20

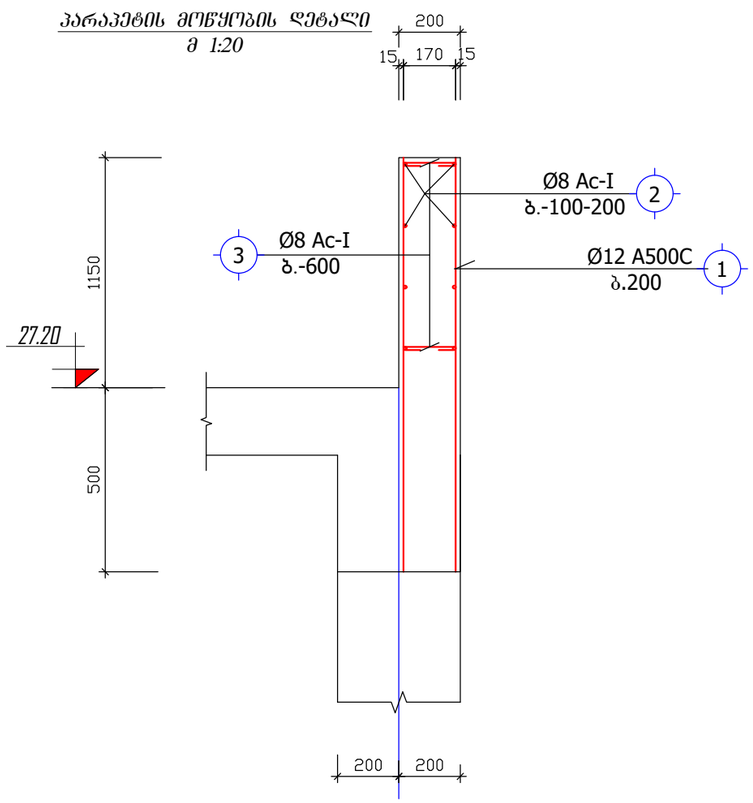


| | | | | | | | |
|---|---|---|---|---|---|---|---|
| მშენ. ბაზები. წყნეთის მზატკეცილის №40-40ა ს/კ. 01.14.08.001.600 მრავალბინიანი საცხოვრებელი სახლის პროექტი | | | | გალახურვის ფილის პარაპეტის არმირების ტიპიური დეტალები. | | | 2023 წ. |
| დირექტორი | გ.იაშვილი | | | ფურც. № | რაოდენ. | მასშტ. | დაკვ. № |
| | | | | კ -52 | | 1:20 | |
| შეასრულა | ლორთქიფანიძე | | | დამკვეთი: | | | |
| | | | | შ.პ.ს. "მონოლითი+" | | | |
| | | | | | | | |

| | | | | | |
|---|---|---|---|---|---|
| Обозначение. Заказчик. Благоприятное развитие территории №40-403 Ул. 01.14.08.001.600 Реконструкция улично-дорожной сети Ульяновского района г. Ульяновска | | | | | 2023 г. |
| Изм. | Кол.уч. | Лист | № док. | Подп. | Дата |
| Гип | Шишкина | | | | Стадия. Лист. Листов |
| Нач.отд. | Шишкина | | | | Р 1 3 |
| Н.контр. | Шишкина | | | | ГАУ "Ульяновскгражданпроект" г.Ульяновск |

# 2-2
## Э: 1:20

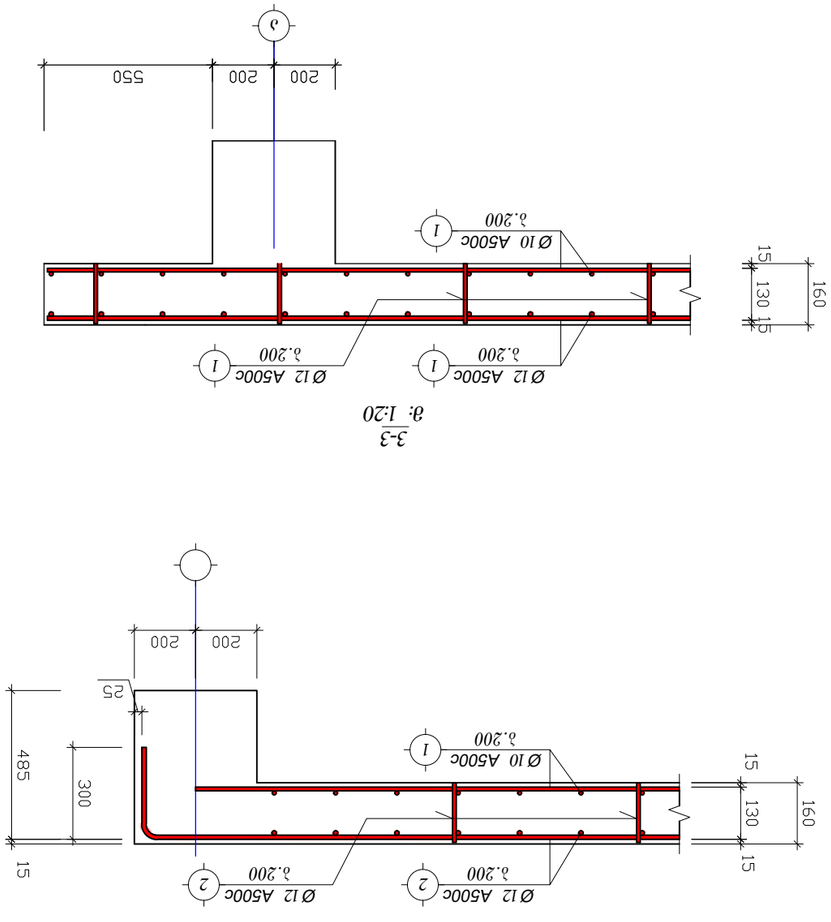


# 3-3
## Э: 1:20

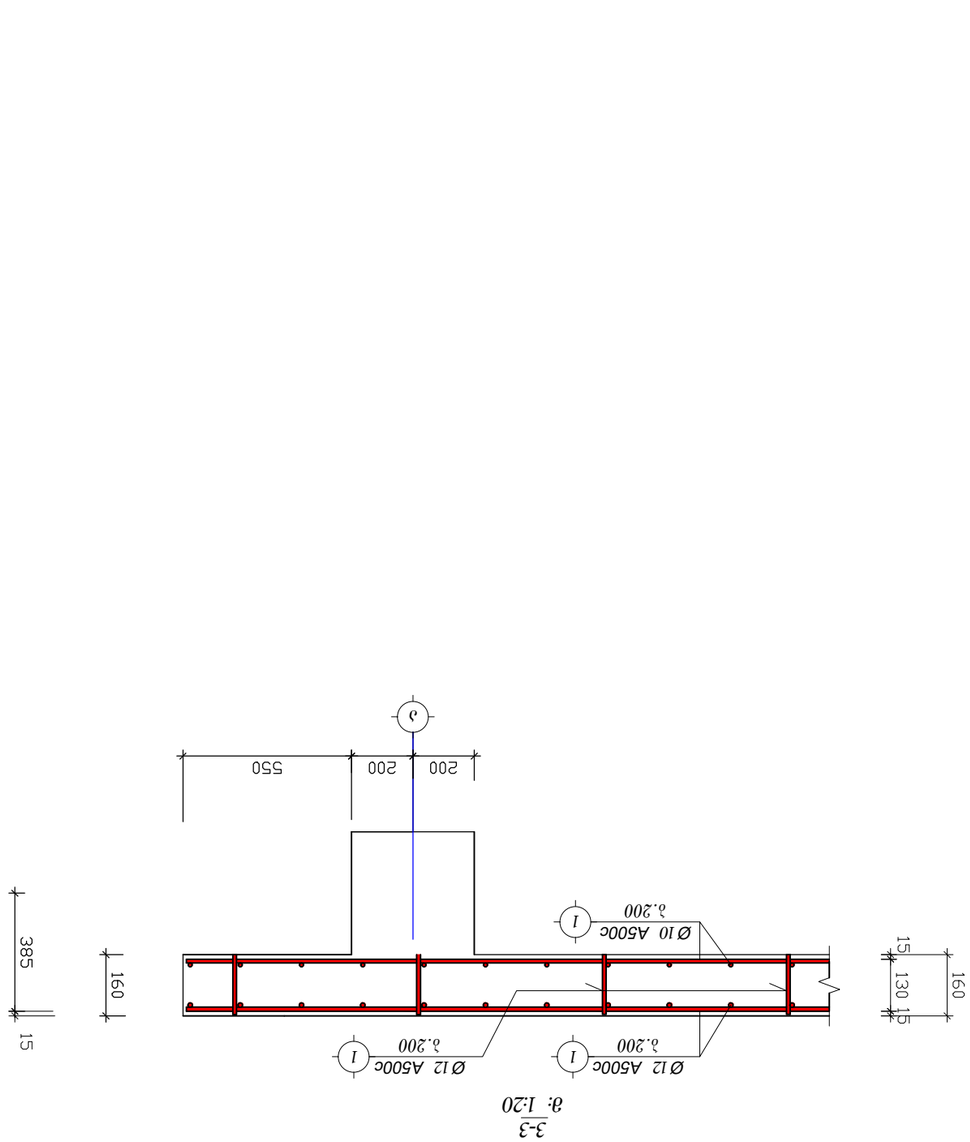


# 4-4
## Э: 1:20

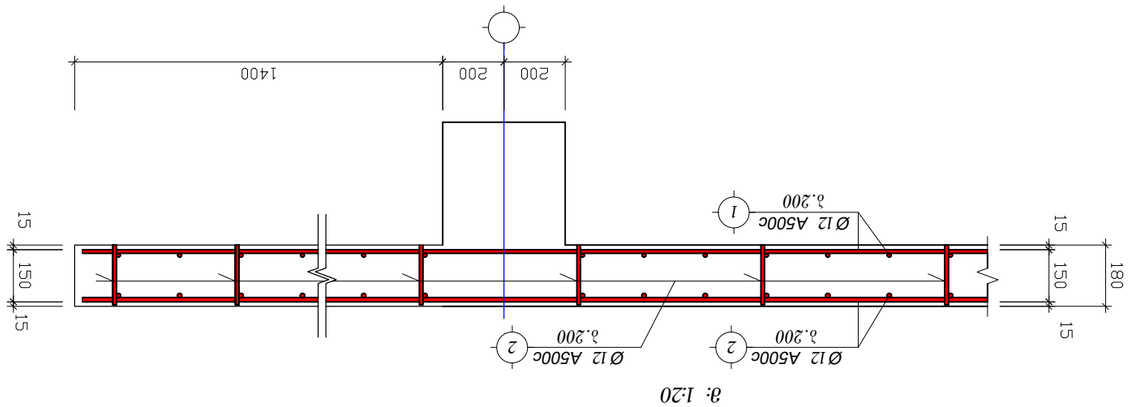


Фрагмент дорожной одежды 1-1 Вычерчивать только
Э. 1:10




Фрагмент дорожной одежды 1-1 Вычерчивать только
Э. 1:10




Дорожная одежда 1-1
Э. 1:10

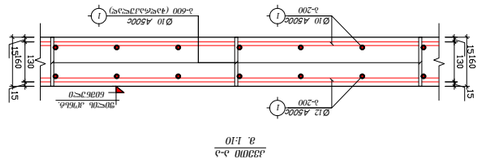

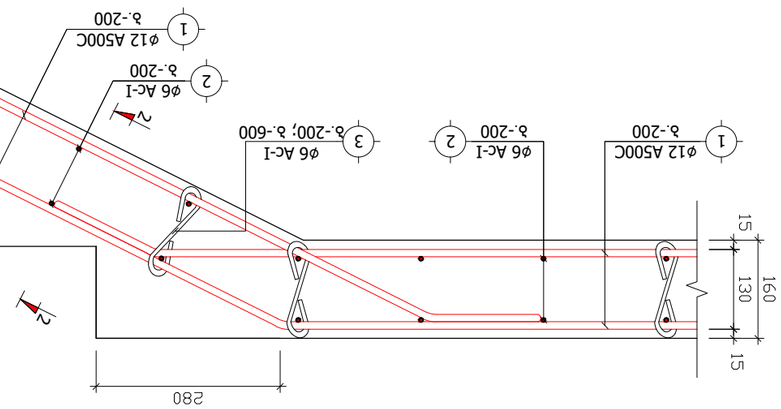


Ј 3 Ъ 6 d n "2"
а. 1:10

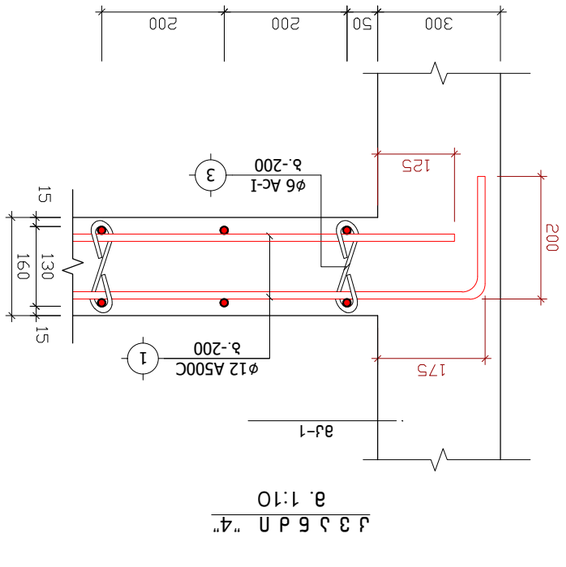


Ј 3 Ъ 6 d n "4"
а. 1:10

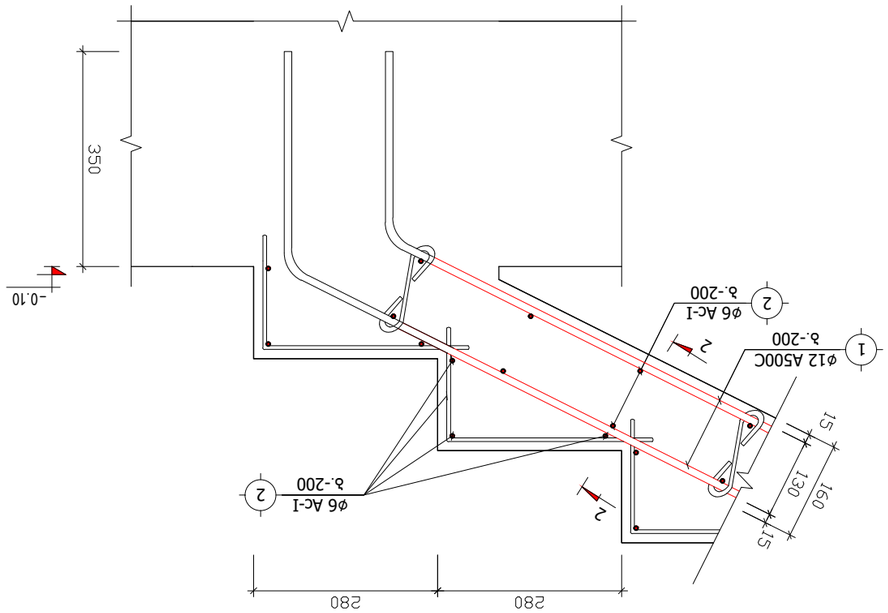


Ј 3 Ъ 6 d n "1"
а. 1:10

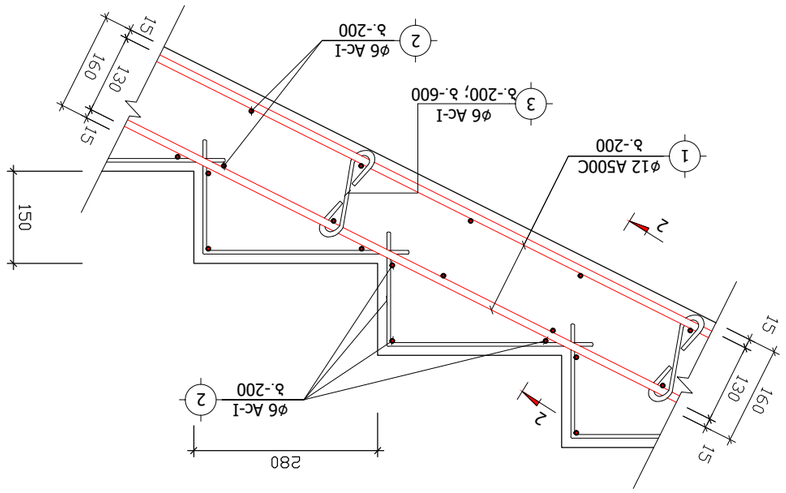


Ј 3 Ъ 6 d n "3"
а. 1:10

| | | | | | |
|---|---|---|---|---|---|
| | | | | | |
| | | | | | |
| ѳдѕѕѕ

| | | | | | | | |
|---|---|---|---|---|---|---|---|
| | | | | | | | |
| | | | | | | | |
| | | | | | | | |

## ตารางปริมาณวัสดุ ชุดที่ 1

### ตารางที่ 1 ตารางปริมาณวัสดุ ชั้นที่ 1

| ลำดับที่ | ชนิดวัสดุ | ขนาด | ความยาวต่อหน่วย (ม.) | จำนวนหน่วยเหมือน | ปริมาณรวม (ม.) | น้ำหนักต่อหน่วย (กก.) | น้ำหนักรวม (ตัน) |
|---|---|---|---|---|---|---|---|
| 1 | เหล็กเส้น | Ø 16 A500c ASTM A615 Gr.60 | 11.58 | 1 | 11.58 | 1.578 | 0.018 |
| 2 | เหล็กเส้น | Ø 12 A500c ASTM A615 Gr.60 | 11.58 | 2 | 23.16 | 1.065 | 0.025 |
| 3 | เหล็กเส้น | Ø 10 A500c ASTM A615 Gr.60 | 11.58 | 2 | 23.16 | 0.666 | 0.015 |
| 4 | เหล็กเส้น | Ø 8 A615 Gr.60 | 11.58 | 2 | 23.16 | 0.395 | 0.009 |
| 5 | เหล็กเส้น | Ø 16 A500c ASTM A615 Gr.60 | 11.58 | 2 | 23.16 | 1.578 | 0.037 |
| 6 | เหล็กเส้น | Ø 12 A500c ASTM A615 Gr.60 | 11.58 | 2 | 23.16 | 1.065 | 0.025 |
| 7 | เหล็กเส้น | Ø 10 A500c ASTM A615 Gr.60 | 11.58 | 2 | 23.16 | 0.666 | 0.015 |
| 8 | เหล็กเส้น | Ø 8 A615 Gr.60 | 11.58 | 2 | 23.16 | 0.395 | 0.009 |
| 9 | เหล็กเส้น | Ø 16 A500c ASTM A615 Gr.60 | 11.58 | 2 | 23.16 | 1.578 | 0.037 |
| 10 | เหล็กเส้น | Ø 12 A500c ASTM A615 Gr.60 | 11.58 | 2 | 23.16 | 1.065 | 0.025 |

### ตารางที่ 2 ตารางปริมาณวัสดุ ชั้นที่ 2

| ลำดับที่ | ชนิดวัสดุ | ขนาด | ความยาวต่อหน่วย (ม.) | จำนวนหน่วยเหมือน | ปริมาณรวม (ม.) | น้ำหนักต่อหน่วย (กก.) | น้ำหนักรวม (ตัน) |
|---|---|---|---|---|---|---|---|
| 1 | เหล็กเส้น | Ø 16 A500c ASTM A615 Gr.60 | 11.58 | 1 | 11.58 | 1.578 | 0.018 |
| 2 | เหล็กเส้น | Ø 12 A500c ASTM A615 Gr.60 | 11.58 | 2 | 23.16 | 1.065 | 0.025 |
| 3 | เหล็กเส้น | Ø 10 A500c ASTM A615 Gr.60 | 11.58 | 2 | 23.16 | 0.666 | 0.015 |
| 4 | เหล็กเส้น | Ø 8 A615 Gr.60 | 11.58 | 2 | 23.16 | 0.395 | 0.009 |
| 5 | เหล็กเส้น | Ø 16 A500c ASTM A615 Gr.60 | 11.58 | 2 | 23.16 | 1.578 | 0.037 |
| 6 | เหล็กเส้น | Ø 12 A500c ASTM A615 Gr.60 | 11.58 | 2 | 23.16 | 1.065 | 0.025 |
| 7 | เหล็กเส้น | Ø 10 A500c ASTM A615 Gr.60 | 11.58 | 2 | 23.16 | 0.666 | 0.015 |
| 8 | เหล็กเส้น | Ø 8 A615 Gr.60 | 11.58 | 2 | 23.16 | 0.395 | 0.009 |
| 9 | เหล็กเส้น | Ø 16 A500c ASTM A615 Gr.60 | 11.58 | 2 | 23.16 | 1.578 | 0.037 |
| 10 | เหล็กเส้น | Ø 12 A500c ASTM A615 Gr.60 | 11.58 | 2 | 23.16 | 1.065 | 0.025 |

### ตารางที่ 3 ตารางปริมาณวัสดุ ชั้นที่ 3

| ลำดับที่ | ชนิดวัสดุ | ขนาด | ความยาวต่อหน่วย (ม.) | จำนวนหน่วยเหมือน | ปริมาณรวม (ม.) | น้ำหนักต่อหน่วย (กก.) | น้ำหนักรวม (ตัน) |
|---|---|---|---|---|---|---|---|
| 1 | เหล็กเส้น | Ø 20 A500c ASTM A615 Gr.60 | 11.58 | 1 | 11.58 | 2.466 | 0.029 |
| 2 | เหล็กเส้น | Ø 16 A500c ASTM A615 Gr.60 | 11.58 | 2 | 23.16 | 1.578 | 0.037 |
| 3 | เหล็กเส้น | Ø 12 A500c ASTM A615 Gr.60 | 11.58 | 2 | 23.16 | 1.065 | 0.025 |
| 4 | เหล็กเส้น | Ø 10 A500c ASTM A615 Gr.60 | 11.58 | 2 | 23.16 | 0.666 | 0.015 |
| 5 | เหล็กเส้น | Ø 8 A615 Gr.60 | 11.58 | 2 | 23.16 | 0.395 | 0.009 |
| 6 | เหล็กเส้น | Ø 20 A500c ASTM A615 Gr.60 | 11.58 | 2 | 23.16 | 2.466 | 0.057 |
| 7 | เหล็กเส้น | Ø 16 A500c ASTM A615 Gr.60 | 11.58 | 2 | 23.16 | 1.578 | 0.037 |
| 8 | เหล็กเส้น | Ø 12 A500c ASTM A615 Gr.60 | 11.58 | 2 | 23.16 | 1.065 | 0.025 |
| 9 | เหล็กเส้น | Ø 10 A500c ASTM A615 Gr.60 | 11.58 | 2 | 23.16 | 0.666 | 0.015 |
| 10 | เหล็กเส้น | Ø 8 A615 Gr.60 | 11.58 | 2 | 23.16 | 0.395 | 0.009 |

### ตารางที่ 4 ตารางปริมาณวัสดุ ชั้นที่ 4

| ลำดับที่ | ชนิดวัสดุ | ขนาด | ความยาวต่อหน่วย (ม.) | จำนวนหน่วยเหมือน | ปริมาณรวม (ม.) | น้ำหนักต่อหน่วย (กก.) | น้ำหนักรวม (ตัน) |
|---|---|---|---|---|---|---|---|
| 1 | เหล็กเส้น | Ø 22 A500c ASTM A615 Gr.60 | 11.58 | 1 | 11.58 | 3.041 | 0.035 |
| 2 | เหล็กเส้น | Ø 20 A500c ASTM A615 Gr.60 | 11.58 | 2 | 23.16 | 2.466 | 0.057 |
| 3 | เหล็กเส้น | Ø 16 A500c ASTM A615 Gr.60 | 11.58 | 2 | 23.16 | 1.578 | 0.037 |
| 4 | เหล็กเส้น | Ø 12 A500c ASTM A615 Gr.60 | 11.58 | 2 | 23.16 | 1.065 | 0.025 |
| 5 | เหล็กเส้น | Ø 10 A500c ASTM A615 Gr.60 | 11.58 | 2 | 23.16 | 0.666 | 0.015 |
| 6 | เหล็กเส้น | Ø 8 A615 Gr.60 | 11.58 | 2 | 23.16 | 0.395 | 0.009 |
| 7 | เหล็กเส้น | Ø 22 A500c ASTM A615 Gr.60 | 11.58 | 2 | 23.16 | 3.041 | 0.070 |
| 8 | เหล็กเส้น | Ø 20 A500c ASTM A615 Gr.60 | 11.58 | 2 | 23.16 | 2.466 | 0.057 |
| 9 | เหล็กเส้น | Ø 16 A500c ASTM A615 Gr.60 | 11.58 | 2 | 23.16 | 1.578 | 0.037 |
| 10 | เหล็กเส้น | Ø 12 A500c ASTM A615 Gr.60 | 11.58 | 2 | 23.16 | 1.065 | 0.025 |

### ตารางที่ 5 ตารางปริมาณวัสดุ ชั้นที่ 5

| ลำดับที่ | ชนิดวัสดุ | ขนาด | ความยาวต่อหน่วย (ม.) | จำนวนหน่วยเหมือน | ปริมาณรวม (ม.) | น้ำหนักต่อหน่วย (กก.) | น้ำหนักรวม (ตัน) |
|---|---|---|---|---|---|---|---|
| 1 | เหล็กเส้น | Ø 22 A500c ASTM A615 Gr.60 | 11.58 | 1 | 11.58 | 3.041 | 0.035 |
| 2 | เหล็กเส้น | Ø 20 A500c ASTM A615 Gr.60 | 11.58 | 2 | 23.16 | 2.466 | 0.057 |
| 3 | เหล็กเส้น | Ø 16 A500c ASTM A615 Gr.60 | 11.58 | 2 | 23.16 | 1.578 | 0.037 |
| 4 | เหล็กเส้น | Ø 12 A500c ASTM A615 Gr.60 | 11.58 | 2 | 23.16 | 1.065 | 0.025 |
| 5 | เหล็กเส้น | Ø 10 A500c ASTM A615 Gr.60 | 11.58 | 2 | 23.16 | 0.666 | 0.015 |
| 6 | เหล็กเส้น | Ø 8 A615 Gr.60 | 11.58 | 2 | 23.16 | 0.395 | 0.009 |
| 7 | เหล็กเส้น | Ø 22 A500c ASTM A615 Gr.60 | 11.58 | 2 | 23.16 | 3.041 | 0.070 |
| 8 | เหล็กเส้น | Ø 20 A500c ASTM A615 Gr.60 | 11.58 | 2 | 23.16 | 2.466 | 0.057 |
| 9 | เหล็กเส้น | Ø 16 A500c ASTM A615 Gr.60 | 11.58 | 2 | 23.16 | 1.578 | 0.037 |
| 10 | เหล็กเส้น | Ø 12 A500c ASTM A615 Gr.60 | 11.58 | 2 | 23.16 | 1.065 | 0.025 |

### ตารางที่ 6 ตารางปริมาณวัสดุ ชั้นที่ 6

| ลำดับที่ | ชนิดวัสดุ | ขนาด | ความยาวต่อหน่วย (ม.) | จำนวนหน่วยเหมือน | ปริมาณรวม (ม.) | น้ำหนักต่อหน่วย (กก.) | น้ำหนักรวม (ตัน) |
|---|---|---|---|---|---|---|---|
| 1 | เหล็กเส้น | Ø 22 A500c ASTM A615 Gr.60 | 11.58 | 1 | 11.58 | 3.041 | 0.035 |
| 2 | เหล็กเส้น | Ø 20 A500c ASTM A615 Gr.60 | 11.58 | 2 | 23.16 | 2.466 | 0.057 |
| 3 | เหล็กเส้น | Ø 16 A500c ASTM A615 Gr.60 | 11.58 | 2 | 23.16 | 1.578 | 0.037 |
| 4 | เหล็กเส้น | Ø 12 A500c ASTM A615 Gr.60 | 11.58 | 2 | 23.16 | 1.065 | 0.025 |
| 5 | เหล็กเส้น | Ø 10 A500c ASTM A615 Gr.60 | 11.58 | 2 | 23.16 | 0.666 | 0.015 |
| 6 | เหล็กเส้น | Ø 8 A615 Gr.60 | 11.58 | 2 | 23.16 | 0.395 | 0.009 |
| 7 | เหล็กเส้น | Ø 22 A500c ASTM A615 Gr.60 | 11.58 | 2 | 23.16 | 3.041 | 0.070 |
| 8 | เหล็กเส้น | Ø 20 A500c ASTM A615 Gr.60 | 11.58 | 2 | 23.16 | 2.466 | 0.057 |
| 9 | เหล็กเส้น | Ø 16 A500c ASTM A615 Gr.60 | 11.58 | 2 | 23.16 | 1.578 | 0.037 |
| 10 | เหล็กเส้น | Ø 12 A500c ASTM A615 Gr.60 | 11.58 | 2 | 23.16 | 1.065 | 0.025 |

### ตารางที่ 7 ตารางปริมาณวัสดุ ชั้นที่ 7

| ลำดับที่ | ชนิดวัสดุ | ขนาด | ความยาวต่อหน่วย (ม.) | จำนวนหน่วยเหมือน | ปริมาณรวม (ม.) | น้ำหนักต่อหน่วย (กก.) | น้ำหนักรวม (ตัน) |
|---|---|---|---|---|---|---|---|
| 1 | เหล็กเส้น | Ø 22 A500c ASTM A615 Gr.60 | 11.58 | 1 | 11.58 | 3.041 | 0.035 |
| 2 | เหล็กเส้น | Ø 20 A500c ASTM A615 Gr.60 | 11.58 | 2 | 23.16 | 2.466 | 0.057 |
| 3 | เหล็กเส้น | Ø 16 A500c ASTM A615 Gr.60 | 11.58 | 2 | 23.16 | 1.578 | 0.037 |
| 4 | เหล็กเส้น | Ø 12 A500c ASTM A615 Gr.60 | 11.58 | 2 | 23.16 | 1.065 | 0.025 |
| 5 | เหล็กเส้น | Ø 10 A500c ASTM A615 Gr.60 | 11.58 | 2 | 23.16 | 0.666 | 0.015 |
| 6 | เหล็กเส้น | Ø 8 A615 Gr.60 | 11.58 | 2 | 23.16 | 0.395 | 0.009 |
| 7 | เหล็กเส้น | Ø 22 A500c ASTM A615 Gr.60 | 11.58 | 2 | 23.16 | 3.041 | 0.070 |
| 8 | เหล็กเส้น | Ø 20 A500c ASTM A615 Gr.60 | 11.58 | 2 | 23.16 | 2.466 | 0.057 |
| 9 | เหล็กเส้น | Ø 16 A500c ASTM A615 Gr.60 | 11.58 | 2 | 23.16 | 1.578 | 0.037 |
| 10 | เหล็กเส้น | Ø 12 A500c ASTM A615 Gr.60 | 11.58 | 2 | 23.16 | 1.065 | 0.025 |

### ตารางที่ 8 ตารางปริมาณวัสดุ ชั้นที่ 8

| ลำดับที่ | ชนิดวัสดุ | ขนาด | ความยาวต่อหน่วย (ม.) | จำนวนหน่วยเหมือน | ปริมาณรวม (ม.) | น้ำหนักต่อหน่วย (กก.) | น้ำหนักรวม (ตัน) |
|---|---|---|---|---|---|---|---|
| 1 | เหล็กเส้น | Ø 22 A500c ASTM A615 Gr.60 | 11.58 | 1 | 11.58 | 3.041 | 0.035 |
| 2 | เหล็กเส้น | Ø 20 A500c ASTM A615 Gr.60 | 11.58 | 2 | 23.16 | 2.466 | 0.057 |
| 3 | เหล็กเส้น | Ø 16 A500c ASTM A615 Gr.60 | 11.58 | 2 | 23.16 | 1.578 | 0.037 |
| 4 | เหล็กเส้น | Ø 12 A500c ASTM A615 Gr.60 | 11.58 | 2 | 23.16 | 1.065 | 0.025 |
| 5 | เหล็กเส้น | Ø 10 A500c ASTM A615 Gr.60 | 11.58 | 2 | 23.16 | 0.666 | 0.015 |
| 6 | เหล็กเส้น | Ø 8 A615 Gr.60 | 11.58 | 2 | 23.16 | 0.395 | 0.009 |
| 7 | เหล็กเส้น | Ø 22 A500c ASTM A615 Gr.60 | 11.58 | 2 | 23.16 | 3.041 | 0.070 |
| 8 | เหล็กเส้น | Ø 20 A500c ASTM A615 Gr.60 | 11.58 | 2 | 23.16 | 2.466 | 0.057 |
| 9 | เหล็กเส้น | Ø 16 A500c ASTM A615 Gr.60 | 11.58 | 2 | 23.16 | 1.578 | 0.037 |
| 10 | เหล็กเส้น | Ø 12 A500c ASTM A615 Gr.60 | 11.58 | 2 | 23.16 | 1.065 | 0.025 |

### ตารางที่ 9 ตารางปริมาณวัสดุ ชั้นที่ 9

| ลำดับที่ | ชนิดวัสดุ | ขนาด | ความยาวต่อหน่วย (ม.) | จำนวนหน่วยเหมือน | ปริมาณรวม (ม.) | น้ำหนักต่อหน่วย (กก.) | น้ำหนักรวม (ตัน) |
|---|---|---|---|---|---|---|---|
| 1 | เหล็กเส้น | Ø 22 A500c ASTM A615 Gr.60 | 11.58 | 1 | 11.58 | 3.041 | 0.035 |
| 2 | เหล็กเส้น | Ø 20 A500c ASTM A615 Gr.60 | 11.58 | 2 | 23.16 | 2.466 | 0.057 |
| 3 | เหล็กเส้น | Ø 16 A500c ASTM A615 Gr.60 | 11.58 | 2 | 23.16 | 1.578 | 0.037 |
| 4 | เหล็กเส้น | Ø 12 A500c ASTM A615 Gr.60 | 11.58 | 2 | 23.16 | 1.065 | 0.025 |
| 5 | เหล็กเส้น | Ø 10 A500c ASTM A615 Gr.60 | 11.58 | 2 | 23.16 | 0.666 | 0.015 |
| 6 | เหล็กเส้น | Ø 8 A615 Gr.60 | 11.58 | 2 | 23.16 | 0.395 | 0.009 |
| 7 | เหล็กเส้น | Ø 22 A500c ASTM A615 Gr.60 | 11.58 | 2 | 23.16 | 3.041 | 0.070 |
| 8 | เหล็กเส้น | Ø 20 A500c ASTM A615 Gr.60 | 11.58 | 2 | 23.16 | 2.466 | 0.057 |
| 9 | เหล็กเส้น | Ø 16 A500c ASTM A615 Gr.60 | 11.58 | 2 | 23.16 | 1.578 | 0.037 |
| 10 | เหล็กเส้น | Ø 12 A500c ASTM A615 Gr.60 | 11.58 | 2 | 23.16 | 1.065 | 0.025 |

### ตารางที่ 10 ตารางปริมาณวัสดุ ชั้นที่ 10

| ลำดับที่ | ชนิดวัสดุ | ขนาด | ความยาวต่อหน่วย (ม.) | จำนวนหน่วยเหมือน | ปริมาณรวม (ม.) | น้ำหนักต่อหน่วย (กก.) | น้ำหนักรวม (ตัน) |
|---|---|---|---|---|---|---|---|
| 1 | เหล็กเส้น | Ø 22 A500c ASTM A615 Gr.60 | 11.58 | 1 | 11.58 | 3.041 | 0.035 |
| 2 | เหล็กเส้น | Ø 20 A500c ASTM A615 Gr.60 | 11.58 | 2 | 23.16 | 2.466 | 0.057 |
| 3 | เหล็กเส้น | Ø 16 A500c ASTM A615 Gr.60 | 11.58 | 2 | 23.16 | 1.578 | 0.037 |
| 4 | เหล็กเส้น | Ø 12 A500c ASTM A615 Gr.60 | 11.58 | 2 | 23.16 | 1.065 | 0.025 |
| 5 | เหล็กเส้น | Ø 10 A500c ASTM A615 Gr.60 | 11.58 | 2 | 23.16 | 0.666 | 0.015 |
| 6 | เหล็กเส้น | Ø 8 A615 Gr.60 | 11.58 | 2 | 23.16 | 0.395 | 0.009 |
| 7 | เหล็กเส้น | Ø 22 A500c ASTM A615 Gr.60 | 11.58 | 2 | 23.16 | 3.041 | 0.070 |
| 8 | เหล็กเส้น | Ø 20 A500c ASTM A615 Gr.60 | 11.58 | 2 | 23.16 | 2.466 | 0.057 |
| 9 | เหล็กเส้น | Ø 16 A500c ASTM A615 Gr.60 | 11.58 | 2 | 23.16 | 1.578 | 0.037 |
| 10 | เหล็กเส้น | Ø 12 A500c ASTM A615 Gr.60 | 11.58 | 2 | 23.16 | 1.065 | 0.025 |

### ตารางที่ 11 ตารางปริมาณวัสดุ ชั้นที่ 11

| ลำดับที่ | ชนิดวัสดุ | ขนาด | ความยาวต่อหน่วย (ม.) | จำนวนหน่วยเหมือน | ปริมาณรวม (ม.) | น้ำหนักต่อหน่วย (กก.) | น้ำหนักรวม (ตัน) |
|---|---|---|---|---|---|---|---|
| 1 | เหล็กเส้น | Ø 22 A500c ASTM A615 Gr.60 | 11.58 | 1 | 11.58 | 3.041 | 0.035 |
| 2 | เหล็กเส้น | Ø 20 A500c ASTM A615 Gr.60 | 11.58 | 2 | 23.16 | 2.466 | 0.057 |
| 3 | เหล็กเส้น | Ø 16 A500c ASTM A615 Gr.60 | 11.58 | 2 | 23.16 | 1.578 | 0.037 |
| 4 | เหล็กเส้น | Ø 12 A500c ASTM A615 Gr.60 | 11.58 | 2 | 23.16 | 1.065 | 0.025 |
| 5 | เหล็กเส้น | Ø 10 A500c ASTM A615 Gr.60 | 11.58 | 2 | 23.16 | 0.666 | 0.015 |
| 6 | เหล็กเส้น | Ø 8 A615 Gr.60 | 11.58 | 2 | 23.16 | 0.395 | 0.009 |
| 7 | เหล็กเส้น | Ø 22 A500c ASTM A615 Gr.60 | 11.58 | 2 | 23.16 | 3.041 | 0.070 |
| 8 | เหล็กเส้น | Ø 20 A500c ASTM A615 Gr.60 | 11.58 | 2 | 23.16 | 2.466 | 0.057 |
| 9 | เหล็กเส้น | Ø 16 A500c ASTM A615 Gr.60 | 11.58 | 2 | 23.16 | 1.578 | 0.037 |
| 10 | เหล็กเส้น | Ø 12 A500c ASTM A615 Gr.60 | 11.58 | 2 | 23.16 | 1.065 | 0.025 |

### ตารางที่ 12 ตารางปริมาณวัสดุ ชั้นที่ 12

| ลำดับที่ | ชนิดวัสดุ | ขนาด | ความยาวต่อหน่วย (ม.) | จำนวนหน่วยเหมือน | ปริมาณรวม (ม.) | น้ำหนักต่อหน่วย (กก.) | น้ำหนักรวม (ตัน) |
|---|---|---|---|---|---|---|---|
| 1 | เหล็กเส้น | Ø 22 A500c ASTM A615 Gr.60 | 11.58 | 1 | 11.58 | 3.041 | 0.035 |
| 2 | เหล็กเส้น | Ø 20 A500c ASTM A615 Gr.60 | 11.58 | 2 | 23.16 | 2.466 | 0.057 |
| 3 | เหล็กเส้น | Ø 16 A500c ASTM A615 Gr.60 | 11.58 | 2 | 23.16 | 1.578 | 0.037 |
| 4 | เหล็กเส้น | Ø 12 A500c ASTM A615 Gr.60 | 11.58 | 2 | 23.16 | 1.065 | 0.025 |
| 5 | เหล็กเส้น | Ø 10 A500c ASTM A615 Gr.60 | 11.58 | 2 | 23.16 | 0.666 | 0.015 |
| 6 | เหล็กเส้น | Ø 8 A615 Gr.60 | 11.58 | 2 | 23.16 | 0.395 | 0.009 |
| 7 | เหล็กเส้น | Ø 22 A500c ASTM A615 Gr.60 | 11.58 | 2 | 23.16 | 3.041 | 0.070 |
| 8 | เหล็กเส้น | Ø 20 A500c ASTM A615 Gr.60 | 11.58 | 2 | 23.16 | 2.466 | 0.057 |
| 9 | เหล็กเส้น | Ø 16 A500c ASTM A615 Gr.60 | 11.58 | 2 | 23.16 | 1.578 | 0.037 |
| 10 | เหล็กเส้น | Ø 12 A500c ASTM A615 Gr.60 | 11.58 | 2 | 23.16 | 1.065 | 0.025 |

### ตารางที่ 13 ตารางปริมาณวัสดุ ชั้นที่ 13

| ลำดับที่ | ชนิดวัสดุ | ขนาด | ความยาวต่อหน่วย (ม.) | จำนวนหน่วยเหมือน | ปริมาณรวม (ม.) | น้ำหนักต่อหน่วย (กก.) | น้ำหนักรวม (ตัน) |
|---|---|---|---|---|---|---|---|
| 1 | เหล็กเส้น | Ø 22 A500c ASTM A615 Gr.60 | 11.58 | 1 | 11.58 | 3.041 | 0.035 |
| 2 | เหล็กเส้น | Ø 20 A500c ASTM A615 Gr.60 | 11.58 | 2 | 23.16 | 2.466 | 0.057 |
| 3 | เหล็กเส้น | Ø 16 A500c ASTM A615 Gr.60 | 11.58 | 2 | 23.16 | 1.578 | 0.037 |
| 4 | เหล็กเส้น | Ø 12 A500c ASTM A615 Gr.60 | 11.58 | 2 | 23.16 | 1.065 | 0.025 |
| 5 | เหล็กเส้น | Ø 10 A500c ASTM A615 Gr.60 | 11.58 | 2 | 23.16 | 0.666 | 0.015 |
| 6 | เหล็กเส้น | Ø 8 A615 Gr.60 | 11.58 | 2 | 23.16 | 0.395 | 0.009 |
| 7 | เหล็กเส้น | Ø 22 A500c ASTM A615 Gr.60 | 11.58 | 2 | 23.16 | 3.041 | 0.070 |
| 8 | เหล็กเส้น | Ø 20 A500c ASTM A615 Gr.60 | 11.58 | 2 | 23.16 | 2.466 | 0.057 |
| 9 | เหล็กเส้น | Ø 16 A500c ASTM A615 Gr.60 | 11.58 | 2 | 23.16 | 1.578 | 0.037 |
| 10 | เหล็กเส้น | Ø 12 A500c ASTM A615 Gr.60 | 11.58 | 2 | 23.16 | 1.065 | 0.025 |

### ตารางที่ 14 ตารางปริมาณวัสดุ ชั้นที่ 14

| ลำดับที่ | ชนิดวัสดุ | ขนาด | ความยาวต่อหน่วย (ม.) | จำนวนหน่วยเหมือน | ปริมาณรวม (ม.) | น้ำหนักต่อหน่วย (กก.) | น้ำหนักรวม (ตัน) |
|---|---|---|---|---|---|---|---|
| 1 | เหล็กเส้น | Ø 22 A500c ASTM A615 Gr.60 | 11.58 | 1 | 11.58 | 3.041 | 0.035 |
| 2 | เหล็กเส้น | Ø 20 A500c ASTM A615 Gr.60 | 11.58 | 2 | 23.16 | 2.466 | 0.057 |
| 3 | เหล็กเส้น | Ø 16 A500c ASTM A615 Gr.60 | 11.58 | 2 | 23.16 | 1.578 | 0.037 |
| 4 | เหล็กเส้น | Ø 12 A500c ASTM A615 Gr.60 | 11.58 | 2 | 23.16 | 1.065 | 0.025 |
| 5 | เหล็กเส้น | Ø 10 A500c ASTM A615 Gr.60 | 11.58 | 2 | 23.16 | 0.666 | 0.015 |
| 6 | เหล็กเส้น | Ø 8 A615 Gr.60 | 11.58 | 2 | 23.16 | 0.395 | 0.009 |
| 7 | เหล็กเส้น | Ø 22 A500c ASTM A615 Gr.60 | 11.58 | 2 | 23.16 | 3.041 | 0.070 |
| 8 | เหล็กเส้น | Ø 20 A500c ASTM A615 Gr.60 | 11.58 | 2 | 23.16 | 2.466 | 0.057 |
| 9 | เหล็กเส้น | Ø 16 A500c ASTM A615 Gr.60 | 11.58 | 2 | 23.16 | 1.578 | 0.037 |
| 10 | เหล็กเส้น | Ø 12 A500c ASTM A615 Gr.60 | 11.58 | 2 | 23.16 | 1.065 | 0.025 |

### ตารางที่ 15 ตารางปริมาณวัสดุ ชั้นที่ 15

| ลำดับที่ | ชนิดวัสดุ | ขนาด | ความยาวต่อหน่วย (ม.) | จำนวนหน่วยเหมือน | ปริมาณรวม (ม.) | น้ำหนักต่อหน่วย (กก.) | น้ำหนักรวม (ตัน) |
|---|---|---|---|---|---|---|---|
| 1 | เหล็กเส้น | Ø 22 A500c ASTM A615 Gr.60 | 11.58 | 1 | 11.58 | 3.041 | 0.035 |
| 2 | เหล็กเส้น | Ø 20 A500c ASTM A615 Gr.60 | 11.58 | 2 | 23.16 | 2.466 | 0.057 |
| 3 | เหล็กเส้น | Ø 16 A500c ASTM A615 Gr.60 | 11.58 | 2 | 23.16 | 1.578 | 0.037 |
| 4 | เหล็กเส้น | Ø 12 A500c ASTM A615 Gr.60 | 11.58 | 2 | 23.16 | 1.065 | 0.025 |
| 5 | เหล็กเส้น | Ø 10 A500c ASTM A615 Gr.60 | 11.58 | 2 | 23.16 | 0.666 | 0.015 |
| 6 | เหล็กเส้น | Ø 8 A615 Gr.60 | 11.58 | 2 | 23.16 | 0.395 | 0.009 |
| 7 | เหล็กเส้น | Ø 22 A500c ASTM A615 Gr.60 | 11.58 | 2 | 23.16 | 3.041 | 0.070 |
| 8 | เหล็กเส้น | Ø 20 A500c ASTM A615 Gr.60 | 11.58 | 2 | 23.16 | 2.466 | 0.057 |
| 9 | เหล็กเส้น | Ø 16 A500c ASTM A615 Gr.60 | 11.58 | 2 | 23.16 | 1.578 | 0.037 |
| 10 | เหล็กเส้น | Ø 12 A500c ASTM A615 Gr.60 | 11.58 | 2 | 23.16 | 1.065 | 0.025 |

### ตารางที่ 16 ตารางปริมาณวัสดุ ชั้นที่ 16

| ลำดับที่ | ชนิดวัสดุ | ขนาด | ความยาวต่อหน่วย (ม.) | จำนวนหน่วยเหมือน | ปริมาณรวม (ม.) | น้ำหนักต่อหน่วย (กก.) | น้ำหนักรวม (ตัน) |
|---|---|---|---|---|---|---|---|
| 1 | เหล็กเส้น | Ø 22 A500c ASTM A615 Gr.60 | 11.58 | 1 | 11.58 | 3.041 | 0.035 |
| 2 | เหล็กเส้น | Ø 20 A500c ASTM A615 Gr.60 | 11.58 | 2 | 23.16 | 2.466 | 0.057 |
| 3 | เหล็กเส้น | Ø 16 A500c ASTM A615 Gr.60 | 11.58 | 2 | 23.16 | 1.578 | 0.037 |
| 4 | เหล็กเส้น | Ø 12 A500c ASTM A615 Gr.60 | 11.58 | 2 | 23.16 | 1.065 | 0.025 |
| 5 | เหล็กเส้น | Ø 10 A500c ASTM A615 Gr.60 | 11.58 | 2 | 23.16 | 0.666 | 0.015 |
| 6 | เหล็กเส้น | Ø 8 A615 Gr.60 | 11.58 | 2 | 23.16 | 0.395 | 0.009 |
| 7 | เหล็กเส้น | Ø 22 A500c ASTM A615 Gr.60 | 11.58 | 2 | 23.16 | 3.041 | 0.070 |
| 8 | เหล็กเส้น | Ø 20 A500c ASTM A615 Gr.60 | 11.58 | 2 | 23.16 | 2.466 | 0.057 |
| 9 | เหล็กเส้น | Ø 16 A500c ASTM A615 Gr.60 | 11.58 | 2 | 23.16 | 1.578 | 0.037 |
| 10 | เหล็กเส้น | Ø 12 A500c ASTM A615 Gr.60 | 11.58 | 2 | 23.16 | 1.065 | 0.025 |

### ตารางที่ 17 ตารางปริมาณวัสดุ ชั้นที่ 17

| ลำดับที่ | ชนิดวัสดุ | ขนาด | ความยาวต่อหน่วย (ม.) | จำนวนหน่วยเหมือน | ปริมาณรวม (ม.) | น้ำหนักต่อหน่วย (กก.) | น้ำหนักรวม (ตัน) |
|---|---|---|---|---|---|---|---|
| 1 | เหล็กเส้น | Ø 22 A500c ASTM A615 Gr.60 | 11.58 | 1 | 11.58 | 3.041 | 0.035 |
| 2 | เหล็กเส้น | Ø 20 A500c ASTM A615 Gr.60 | 11.58 | 2 | 23.16 | 2.466 | 0.057 |
| 3 | เหล็กเส้น | Ø 16 A500c ASTM A615 Gr.60 | 11.58 | 2 | 23.16 | 1.578 | 0.037 |
| 4 | เหล็กเส้น | Ø 12 A500c ASTM A615 Gr.60 | 11.58 | 2 | 23.16 | 1.065 | 0.025 |
| 5 | เหล็กเส้น | Ø 10 A500c ASTM A615 Gr.60 | 11.58 | 2 | 23.16 | 0.666 | 0.015 |
| 6 | เหล็กเส้น | Ø 8 A615 Gr.60 | 11.58 | 2 | 23.16 | 0.395 | 0.009 |
| 7 | เหล็กเส้น | Ø 22 A500c ASTM A615 Gr.60 | 11.58 | 2 | 23.16 | 3.041 | 0.070 |
| 8 | เหล็กเส้น | Ø 20 A500c ASTM A615 Gr.60 | 11.58 | 2 | 23.16 | 2.466 | 0.057 |
| 9 | เหล็กเส้น | Ø 16 A500c ASTM A615 Gr.60 | 11.58 | 2 | 23.16 | 1.578 | 0.037 |
| 10 | เหล็กเส้น | Ø 12 A500c ASTM A615 Gr.60 | 11.58 | 2 | 23.16 | 1.065 | 0.025 |

### ตารางที่ 18 ตารางปริมาณวัสดุ ชั้นที่ 18

| ลำดับที่ | ชนิดวัสดุ | ขนาด | ความยาวต่อหน่วย (ม.) | จำนวนหน่วยเหมือน | ปริมาณรวม (ม.) | น้ำหนักต่อหน่วย (กก.) | น้ำหนักรวม (ตัน) |
|---|---|---|---|---|---|---|---|
| 1 | เหล็กเส้น | Ø 22 A500c ASTM A615 Gr.60 | 11.58 | 1 | 11.58 | 3.041 | 0.035 |
| 2 | เหล็กเส้น | Ø 20 A500c ASTM A615 Gr.60 | 11.58 | 2 | 23.16 | 2.466 | 0.057 |
| 3 | เหล็กเส้น | Ø 16 A500c ASTM A615 Gr.60 | 11.58 | 2 | 23.16 | 1.578 | 0.037 |
| 4 | เหล็กเส้น | Ø 12 A500c ASTM A615 Gr.60 | 11.58 | 2 | 23.16 | 1.065 | 0.025 |
| 5 | เหล็กเส้น | Ø 10 A500c ASTM A615 Gr.60 | 11.58 | 2 | 23.16 | 0.666 | 0.015 |
| 6 | เหล็กเส้น | Ø 8 A615 Gr.60 | 11.58 | 2 | 23.16 | 0.395 | 0.009 |
| 7 | เหล็กเส้น | Ø 22 A500c ASTM A615 Gr.60 | 11.58 | 2 | 23.16 | 3.041 | 0.070 |
| 8 | เหล็กเส้น | Ø 20 A500c ASTM A615 Gr.60 | 11.58 | 2 | 23.16 | 2.466 | 0.057 |
| 9 | เหล็กเส้น | Ø 16 A500c ASTM A615 Gr.60 | 11.58 | 2 | 23.16 | 1.578 | 0.037 |
| 10 | เหล็กเส้น | Ø 12 A500c ASTM A615 Gr.60 | 11.58 | 2 | 23.16 | 1.065 | 0.025 |

### ตารางที่ 19 ตารางปริมาณวัสดุ ชั้นที่ 19

| ลำดับที่ | ชนิดวัสดุ | ขนาด | ความยาวต่อหน่วย (ม.) | จำนวนหน่วยเหมือน | ปริมาณรวม (ม.) | น้ำหนักต่อหน่วย (กก.) | น้ำหนักรวม (ตัน) |
|---|---|---|---|---|---|---|---|
| 1 | เหล็กเส้น | Ø 22 A500c ASTM A615 Gr.60 | 11.58 | 1 | 11.58 | 3.041 | 0.035 |
| 2 | เหล็กเส้น | Ø 20 A500c ASTM A615 Gr.60 | 11.58 | 2 | 23.16 | 2.466 | 0.057 |
| 3 | เหล็กเส้น | Ø 16 A500c ASTM A615 Gr.60 | 11.58 | 2 | 23.16 | 1.578 | 0.037 |
| 4 | เหล็กเส้น | Ø 12 A500c ASTM A615 Gr.60 | 11.58 | 2 | 23.16 | 1.065 | 0.025 |
| 5 | เหล็กเส้น | Ø 10 A500c ASTM A615 Gr.60 | 11.58 | 2 | 23.16 | 0.666 | 0.015 |
| 6 | เหล็กเส้น | Ø 8 A615 Gr.60 | 11.58 | 2 | 23.16 | 0.395 | 0.009 |
| 7 | เหล็กเส้น | Ø 22 A500c ASTM A615 Gr.60 | 11.58 | 2 | 23.16 | 3.041 | 0.070 |
| 8 | เหล็กเส้น | Ø 20 A500c ASTM A615 Gr.60 | 11.58 | 2 | 23.16 | 2.466 | 0.057 |
| 9 | เหล็กเส้น | Ø 16 A500c ASTM A615 Gr.60 | 11.58 | 2 | 23.16 | 1.578 | 0.037 |
| 10 | เหล็กเส้น | Ø 12 A500c ASTM A615 Gr.60 | 11.58 | 2 | 23.16 | 1.065 | 0.025 |

### ตารางที่ 20 ตารางปริมาณวัสดุ ชั้นที่ 20

| ลำดับที่ | ชนิดวัสดุ | ขนาด | ความยาวต่อหน่วย (ม.) | จำนวนหน่วยเหมือน | ปริมาณรวม (ม.) | น้ำหนักต่อหน่วย

**ตารางที่ 11** ปริมาณงานดินขุดและถมกลับ

**ปริมาณงานดินขุดและถมกลับ**

| ลำดับที่ | รายการ | ขนาด | จำนวน | ความยาว (ม.) | ปริมาณงานดินขุด (ลบ.ม.) | ปริมาณงานดินถมกลับ (ลบ.ม.) | ปริมาณงานดินถมเพิ่ม (ลบ.ม.) |
|---|---|---|---|---|---|---|---|
| | | | | | | | |
| 1 | ท่อ ค.ส.ล. Ø 22 ASQC ASTM 3760-98 (ISO 6935) | L = | 1 | L = 25.4 | 609.6 | 1818.1 | |
| 2 | บ่อพัก Ø 8 Ac-I ASTM 3760-98 (ISO 6935) | L = 2000 | 1 | L = | 924 | 364.4 | |
| 3 | บ่อพัก Ø 8 Ac-I ASTM 3760-98 (ISO 6935) | L = 1200 | 1 | L = | 554.4 | 218.6 | |
| | ลึกเฉลี่ย วัสดุที่ใช้ B25 | V = 3.4 | x 3 | = | 10.2 | ลบ.ม. | |

**ปริมาณงานดินขุดและถมกลับ ชนิดที่ 1**

**ปริมาณงานดินขุดและถมกลับ**

| | | | | | | | |
|---|---|---|---|---|---|---|---|
| | | | | | | | |
| 1 | ท่อ ค.ส.ล. Ø 18 ASQC ASTM 3760-98 (ISO 6935) | L = | 1 | L = 25.4 | 20 x 1 | 508 | 1014.3 |
| 2 | บ่อพัก Ø 8 Ac-I ASTM 3760-98 (ISO 6935) | L = 2900 | 1 | L = | 154 x 1 | 446.6 | 176.1 |
| 3 | บ่อพัก Ø 8 Ac-I ASTM 3760-98 (ISO 6935) | L = 2300 | 1 | L = | 154 x 1 | 354.2 | 139.7 |
| 4 | บ่อพัก Ø 8 Ac-I ASTM 3760-98 (ISO 6935) | L = 2500 | 1 | L = | 154 x 1 | 385 | 151.8 |
| 5 | บ่อพัก Ø 8 Ac-I ASTM 3760-98 (ISO 6935) | L = 2700 | 1 | L = | 154 x 1 | 415.8 | 164.0 |
| | ลึกเฉลี่ย วัสดุที่ใช้ B25 | V = 27.6 | x 1 | = | 27.6 | ลบ.ม. | |

**ปริมาณงานดินขุดและถมกลับ ชนิดที่ 2**

**ปริมาณงานดินขุดและถมกลับ**

| | | | | | | | |
|---|---|---|---|---|---|---|---|
| | | | | | | | |
| 1 | ท่อ ค.ส.ล. Ø 20 ASQC ASTM 3760-98 (ISO 6935) | L = | 1 | L = 21.8 | 10 x 1 | 218 | 537.3 |
| 2 | บ่อพัก Ø 8 Ac-I ASTM 3760-98 (ISO 6935) | L = 3600 | 1 | L = | 132 x 1 | 475.2 | 187.4 |
| 3 | บ่อพัก Ø 8 Ac-I ASTM 3760-98 (ISO 6935) | L = 450 | 1 | L = | 528 x 1 | 237.6 | 93.7 |
| | ลึกเฉลี่ย วัสดุที่ใช้ B25 | V = 5.3 | x 1 | = | 5.3 | ลบ.ม. | |

**ปริมาณงานดินขุดและถมกลับ ชนิดที่ 3**

**ปริมาณงานดินขุดและถมกลับ**

| | | | | | | | |
|---|---|---|---|---|---|---|---|
| | | | | | | | |
| 1 | ท่อ ค.ส. Ø 20 ASQC ASTM 3760-98 (ISO 6935) | L = | 1 | L = 4.4 | 14 x 1 | 61.6 | 151.8 |
| 2 | ท่อ ค.ส. Ø 20 ASQC ASTM 3760-98 (ISO 6935) | L = | 1 | L = 14.2 | 12 x 1 | 170.4 | 420.0 |
| 3 | บ่อพัก Ø 8 Ac-I ASTM 3760-98 (ISO 6935) | L = 2800 | 1 | L = | 22 x 1 | 61.6 | 24.3 |
| 4 | บ่อพัก Ø 8 Ac-I ASTM 3760-98 (ISO 6935) | L = 450 | 1 | L = | 44 x 1 | 19.8 | 7.8 |
| 5 | บ่อพัก Ø 8 Ac-I ASTM 3760-98 (ISO 6935) | L = 2400 | 1 | L = | 132 x 1 | 316.8 | 124.9 |
| 6 | บ่อพัก Ø 8 Ac-I ASTM 3760-98 (ISO 6935) | L = 450 | 1 | L = | 264 x 1 | 118.8 | 46.9 |
| | ลึกเฉลี่ย วัสดุที่ใช้ B25 | V = 7.7 | x 1 | = | 7.7 | ลบ.ม. | |

**ปริมาณงานดินขุดและถมกลับ ชนิดที่ 4 ขุดลึก 3.00 ม. ถึง 6.00 ม.**

**ปริมาณงานดินขุดและถมกลับ**

| | | | | | | | |
|---|---|---|---|---|---|---|---|
| | | | | | | | |
| 1 | ท่อ ค.ส.ล. Ø 12 ASQC ASTM 3760-98 (ISO 6935) | L = | 1 | L = 8610 | 1 x 1 | 8610 | 7640.2 |
| 2 | ท่อ ค.ส.ล. Ø 12 ASQC ASTM 3760-98 (ISO 6935) | L = | 1 | L = 8610 | 1 x 1 | 8610 | 7640.2 |
| | ลึกเฉลี่ย วัสดุที่ใช้ B25 | V = 134.4 | x 1 | = | 134.4 | ลบ.ม. | |

**ปริมาณงานดินขุดและถมกลับ ชนิดที่ 5 ขุดลึก 6.00 ม. ถึง 9.00 ม.**

**ปริมาณงานดินขุดและถมกลับ**

| | | | | | | | |
|---|---|---|---|---|---|---|---|
| | | | | | | | |
| 1 | ท่อ ค.ส.ล. Ø 12 ASQC ASTM 3760-98 (ISO 6935) | L = | 1 | L = 460 | 1 x 1 | 460 | 283.5 |
| 2 | ท่อ ค.ส.ล. Ø 12 ASQC ASTM 3760-98 (ISO 6935) | L = | 1 | L = 460 | 1 x 1 | 460 | 408.2 |
| | ลึกเฉลี่ย วัสดุที่ใช้ B25 | V = 4.9 | x 1 | = | 4.9 | ลบ.ม. | |

**ปริมาณงานดินขุดและถมกลับ ชนิดที่ 6 ขุดลึก 9.00 ม. ถึง 12.00 ม.**

**ปริมาณงานดินขุดและถมกลับ**

| | | | | | | | |
|---|---|---|---|---|---|---|---|
| | | | | | | | |
| 1 | ท่อ ค.ส. Ø 10 ASQC ASTM 3760-98 (ISO 6935) | L = | 1 | L = 650 | 1 x 1 | 650 | 400.5 |
| 2 | ท่อ ค.ส. Ø 12 ASQC ASTM 3760-98 (ISO 6935) | L = | 1 | L = 650 | 1 x 1 | 650 | 576.7 |
| | ลึกเฉลี่ย วัสดุที่ใช้ B25 | V = 80.7 | x 1 | = | 80.7 | ลบ.ม. | |

**ปริมาณงานดินขุดและถมกลับ ชนิดที่ 7 ขุดลึก 12.00 ม. ถึง 15.00 ม.**

**ปริมาณงานดินขุดและถมกลับ**

| | | | | | | | |
|---|---|---|---|---|---|---|---|
| | | | | | | | |
| 1 | ท่อ ค.ส. Ø 10 ASQC ASTM 3760-98 (ISO 6935) | L = | 1 | L = 7920 | 1 x 3 | 23760 | 14641.5 |
| 2 | ท่อ ค.ส. Ø 12 ASQC ASTM 3760-98 (ISO 6935) | L = | 1 | L = 7920 | 1 x 3 | 23760 | 21083.8 |
| | ลึกเฉลี่ย วัสดุที่ใช้ B25 | V = 94.7 | x 3 | = | 284.1 | ลบ.ม. | |

**ปริมาณงานดินขุดและถมกลับ ชนิดที่ 8 ขุดลึก 15.00 ม. ถึง 18.00 ม.**

**ปริมาณงานดินขุดและถมกลับ**

| | | | | | | | |
|---|---|---|---|---|---|---|---|
| | | | | | | | |
| 1 | ท่อ ค.ส. Ø 10 ASQC ASTM 3760-98 (ISO 6935) | L = | 1 | L = 8320 | 1 x 1 | 8320 | 5127.0 |
| 2 | ท่อ ค.ส. Ø 12 ASQC ASTM 3760-98 (ISO 6935) | L = | 1 | L = 8320 | 1 x 1 | 8320 | 7382.9 |
| | ลึกเฉลี่ย วัสดุที่ใช้ B25 | V = 95.5 | x 1 | = | 95.5 | ลบ.ม. | |

**ปริมาณงานดินขุดและถมกลับ ชนิดที่ 9 ขุดลึก 18.00 ม. ถึง 21.00 ม.**

**ปริมาณงานดินขุดและถมกลับ**

| | | | | | | | |
|---|---|---|---|---|---|---|---|
| | | | | | | | |
| 1 | ท่อ ค.ส. Ø 10 ASQC ASTM 3760-98 (ISO 6935) | L = | 1 | L = 4660 | 1 x 3 | 13980 | 12406.5 |
| 2 | ท่อ ค.ส. Ø 12 ASQC ASTM 3760-98 (ISO 6935) | L = | 1 | L = 4660 | 1 x 3 | 13980 | 16892.7 |
| | ลึกเฉลี่ย วัสดุที่ใช้ B25 | V = 466 | x 1 | = | 466 | ลบ.ม. | |

**ปริมาณงานดินขุดและถมกลับ ชนิดที่ 10 ขุดลึก 21.00 ม. ถึง 24.00 ม.**

**ปริมาณงานดินขุดและถมกลับ**

| | | | | | | | |
|---|---|---|---|---|---|---|---|
| | | | | | | | |
| 1 | ท่อ ค.ส. Ø 10 ASQC ASTM 3760-98 (ISO 6935) | L = | 1 | L = 4660 | 1 x 3 | 13980 | 12406.5 |
| 2 | ท่อ ค.ส. Ø 12 ASQC ASTM 3760-98 (ISO 6935) | L = | 1 | L = 4660 | 1 x 3 | 13980 | 16892.7 |
| | ลึกเฉลี่ย วัสดุที่ใช้ B25 | V = 466 | x 1 | = | 466 | ลบ.ม. | |

**ปริมาณงานดินขุดและถมกลับ ชนิดที่ 11 ขุดลึก 24.00 ม. ถึง 27.00 ม.**

**ปริมาณงานดินขุดและถมกลับ**

| ลำดับที่ | รายการ | ขนาด | จำนวน | ความยาว (ม.) | ปริมาณงานดินขุด (ลบ.ม.) | ปริมาณงานดินถมกลับ (ลบ.ม.) | ปริมาณงานดินถมเพิ่ม (ลบ.ม.) |
|---|---|---|---|---|---|---|---|
| | | | | | | | |
| 1 | ท่อ ค.ส.ล. Ø 10 ASQC ASTM 3760-98 (ISO 6935) | L = | 1 | L = 4660 | 1 x 3 | 13980 | 12406.5 |
| 2 | ท่อ ค.ส.ล. Ø 12 ASQC ASTM 3760-98 (ISO 6935) | L = | 1 | L = 4660 | 1 x 3 | 13980 | 16892.7 |
| | ลึกเฉลี่ย วัสดุที่ใช้ B25 | V = 466 | x 1 | = | 466 | ลบ.ม. | |

**ปริมาณงานดินขุดและถมกลับ ชนิดที่ 12 ขุดลึก 27.00 ม. ถึง 30.00 ม.**

**ปริมาณงานดินขุดและถมกลับ**

| | | | | | | | |
|---|---|---|---|---|---|---|---|
| | | | | | | | |
| 1 | ท่อ ค.ส. Ø 10 ASQC ASTM 3760-98 (ISO 6935) | L = | 1 | L = 4660 | 1 x 3 | 13980 | 12406.5 |
| 2 | ท่อ ค.ส. Ø 12 ASQC ASTM 3760-98 (ISO 6935) | L = | 1 | L = 4660 | 1 x 3 | 13980 | 16892.7 |
| | ลึกเฉลี่ย วัสดุที่ใช้ B25 | V = 466 | x 1 | = | 466 | ลบ.ม. | |

**ปริมาณงานดินขุดและถมกลับ ชนิดที่ 13 ขุดลึก 30.00 ม. ถึง 33.00 ม.**

**ปริมาณงานดินขุดและถมกลับ**

| | | | | | | | |
|---|---|---|---|---|---|---|---|
| | | | | | | | |
| 1 | ท่อ ค.ส. Ø 10 ASQC ASTM 3760-98 (ISO 6935) | L = | 1 | L = 4660 | 1 x 3 | 13980 | 12406.5 |
| 2 | ท่อ ค.ส. Ø 12 ASQC ASTM 3760-98 (ISO 6935) | L = | 1 | L = 4660 | 1 x 3 | 13980 | 16892.7 |
| | ลึกเฉลี่ย วัสดุที่ใช้ B25 | V = 466 | x 1 | = | 466 | ลบ.ม. | |

**ปริมาณงานดินขุดและถมกลับ ชนิดที่ 14 ขุดลึก 33.00 ม. ถึง 36.00 ม.**

**ปริมาณงานดินขุดและถมกลับ**

| | | | | | | | |
|---|---|---|---|---|---|---|---|
| | | | | | | | |
| 1 | ท่อ ค.ส. Ø 10 ASQC ASTM 3760-98 (ISO 6935) | L = | 1 | L = 4660 | 1 x 3 | 13980 | 12406.5 |
| 2 | ท่อ ค.ส. Ø 12 ASQC ASTM 3760-98 (ISO 6935) | L = | 1 | L = 4660 | 1 x 3 | 13980 | 16892.7 |
| | ลึกเฉลี่ย วัสดุที่ใช้ B25 | V = 466 | x 1 | = | 466 | ลบ.ม. | |

**ปริมาณงานดินขุดและถมกลับ ชนิดที่ 15 ขุดลึก 36.00 ม. ถึง 39.00 ม.**

**ปริมาณงานดินขุดและถมกลับ**

| | | | | | | | |
|---|---|---|---|---|---|---|---|
| | | | | | | | |
| 1 | ท่อ ค.ส. Ø 10 ASQC ASTM 3760-98 (ISO 6935) | L = | 1 | L = 4660 | 1 x 3 | 13980 | 12406.5 |
| 2 | ท่อ ค.ส. Ø 12 ASQC ASTM 3760-98 (ISO 6935) | L = | 1 | L = 4660 | 1 x 3 | 13980 | 16892.7 |
| | ลึกเฉลี่ย วัสดุที่ใช้ B25 | V = 466 | x 1 | = | 466 | ลบ.ม. | |

**ปริมาณงานดินขุดและถมกลับ ชนิดที่ 16 ขุดลึก 39.00 ม. ถึง 42.00 ม.**

**ปริมาณงานดินขุดและถมกลับ**

| | | | | | | | |
|---|---|---|---|---|---|---|---|
| | | | | | | | |
| 1 | ท่อ ค.ส. Ø 10 ASQC ASTM 3760-98 (ISO 6935) | L = | 1 | L = 4660 | 1 x 3 | 13980 | 12406.5 |
| 2 | ท่อ ค.ส. Ø 12 ASQC ASTM 3760-98 (ISO 6935) | L = | 1 | L = 4660 | 1 x 3 | 13980 | 16892.7 |
| | ลึกเฉลี่ย วัสดุที่ใช้ B25 | V = 466 | x 1 | = | 466 | ลบ.ม. | |

**ปริมาณงานดินขุดและถมกลับ ชนิดที่ 17 ขุดลึก 42.00 ม. ถึง 45.00 ม.**

**ปริมาณงานดินขุดและถมกลับ**

| | | | | | | | |
|---|---|---|---|---|---|---|---|
| | | | | | | | |
| 1 | ท่อ ค.ส. Ø 10 ASQC ASTM 3760-98 (ISO 6935) | L = | 1 | L = 4660 | 1 x 3 | 13980 | 12406.5 |
| 2 | ท่อ ค.ส. Ø 12 ASQC ASTM 3760-98 (ISO 6935) | L = | 1 | L = 4660 | 1 x 3 | 13980 | 16892.7 |
| | ลึกเฉลี่ย วัสดุที่ใช้ B25 | V = 466 | x 1 | = | 466 | ลบ.ม. | |

**ปริมาณงานดินขุดและถมกลับ ชนิดที่ 18 ขุดลึก 45.00 ม. ถึง 48.00 ม.**

**ปริมาณงานดินขุดและถมกลับ**

| | | | | | | | |
|---|---|---|---|---|---|---|---|
| | | | | | | | |
| 1 | ท่อ ค.ส. Ø 10 ASQC ASTM 3760-98 (ISO 6935) | L = | 1 | L = 4660 | 1 x 3 | 13980 | 12406.5 |
| 2 | ท่อ ค.ส. Ø 12 ASQC ASTM 3760-98 (ISO 6935) | L = | 1 | L = 4660 | 1 x 3 | 13980 | 16892.7 |
| | ลึกเฉลี่ย วัสดุที่ใช้ B25 | V = 466 | x 1 | = | 466 | ลบ.ม. | |

**ปริมาณงานดินขุดและถมกลับ ชนิดที่ 19 ขุดลึก 48.00 ม. ถึง 51.00 ม.**

**ปริมาณงานดินขุดและถมกลับ**

| | | | | | | | |
|---|---|---|---|---|---|---|---|
| | | | | | | | |
| 1 | ท่อ ค.ส. Ø 10 ASQC ASTM 3760-98 (ISO 6935) | L = | 1 | L = 4660 | 1 x 3 | 13980 | 12406.5 |
| 2 | ท่อ ค.ส. Ø 12 ASQC ASTM 3760-98 (ISO 6935) | L = | 1 | L = 4660 | 1 x 3 | 13980 | 16892.7 |
| | ลึกเฉลี่ย วัสดุที่ใช้ B25 | V = 466 | x 1 | = | 466 | ลบ.ม. | |

**ปริมาณงานดินขุดและถมกลับ ชนิดที่ 20 ขุดลึก 51.00 ม. ถึง 54.00 ม.**

**ปริมาณงานดินขุดและถมกลับ**

| | | | | | | | |
|---|---|---|---|---|---|---|---|
| | | | | | | | |
| 1 | ท่อ ค.ส. Ø 10 ASQC ASTM 3760-98 (ISO 6935) | L = | 1 | L = 4660 | 1 x 3 | 13980 | 12406.5 |
| 2 | ท่อ ค.ส. Ø 12 ASQC ASTM 3760-98 (ISO 6935) | L = | 1 | L = 4660 | 1 x 3 | 13980 | 16892.7 |
| | ลึกเฉลี่ย วัสดุที่ใช้ B25 | V = 466 | x 1 | = | 466 | ลบ.ม. | |

**ปริมาณงานดินขุดและถมกลับ ชนิดที่ 21 ขุดลึก 54.00 ม. ถึง 57.00 ม.**

**ปริมาณงานดินขุดและถมกลับ**

| | | | | | | | |
|---|---|---|---|---|---|---|---|
| | | | | | | | |
| 1 | ท่อ ค.ส. Ø 10 ASQC ASTM 3760-98 (ISO 6935) | L = | 1 | L = 4660 | 1 x 3 | 13980 | 12406.5 |
| 2 | ท่อ ค.ส. Ø 12 ASQC ASTM 3760-98 (ISO 6935) | L = | 1 | L = 4660 | 1 x 3 | 13980 | 16892.7 |
| | ลึกเฉลี่ย วัสดุที่ใช้ B25 | V = 466 | x 1 | = | 466 | ลบ.ม. | |

**ปริมาณงานดินขุดและถมกลับ ชนิดที่ 22 ขุดลึก 57.00 ม. ถึง 60.00 ม.**

**ปริมาณงานดินขุดและถมกลับ**

| | | | | | | | |
|---|---|---|---|---|---|---|---|
| | | | | | | | |
| 1 | ท่อ ค.ส. Ø 10 ASQC ASTM 3760-98 (ISO 6935) | L = | 1 | L = 4660 | 1 x 3 | 13980 | 12406.5 |
| 2 | ท่อ ค.ส. Ø 12 ASQC ASTM 3760-98 (ISO 6935) | L = | 1 | L = 4660 | 1 x 3 | 13980 | 16892.7 |
| | ลึกเฉลี่ย วัสดุที่ใช้ B25 | V = 466 | x 1 | = | 466 | ลบ.ม. | |

**ปริมาณงานดินขุดและถมกลับ ชนิดที่ 23 ขุดลึก 60.00 ม. ขึ้นไป**

**ปริมาณงานดินขุดและถมกลับ**

| | | | | | | | |
|---|---|---|---|---|---|---|---|
| | | | | | | | |
| 1 | ท่อ ค.ส. Ø 10 ASQC ASTM 3760-98 (ISO 6935) | L = | 1 | L = 4660 | 1 x 3 | 13980 | 12406.5 |
| 2 | ท่อ ค.ส. Ø 12 ASQC ASTM 3760-98 (ISO 6935) | L = | 1 | L = 4660 | 1 x 3 | 13980 | 16892.7 |
| | ลึกเฉลี่ย วัสดุที่ใช้ B25 | V = 466 | x 1 | = | 466 | ลบ.ม. | |

**ปริมาณงานดินขุดและถมกลับ ชนิดที่ 24 ขุดลึก 63.00 ม. ขึ้นไป**

**ปริมาณงานดินขุดและถมกลับ**

| | | | | | | | |
|---|---|---|---|---|---|---|---|
| | | | | | | | |
| 1 | ท่อ ค.ส. Ø 10 ASQC ASTM 3760-98 (ISO 6935) | L = | 1 | L = 4660 | 1 x 3 | 13980 | 12406.5 |
| 2 | ท่อ ค.ส. Ø 12 ASQC ASTM 3760-98 (ISO 6935) | L = | 1 | L = 4660 | 1 x 3 | 13980 | 16892.7 |
| | ลึกเฉลี่ย วัสดุที่ใช้ B25 | V = 466 | x 1 | = | 466 | ลบ.ม. | |

**ปริมาณงานดินขุดและถมกลับ ชนิดที่ 25 ขุดลึก 66.00 ม. ขึ้นไป**

**ปริมาณงานดินขุดและถมกลับ**

| | | | | | | | |
|---|---|---|---|---|---|---|---|
| | | | | | | | |
| 1 | ท่อ ค.ส. Ø 10 ASQC ASTM 3760-98 (ISO 6935) | L = | 1 | L = 4660 | 1 x 3 | 13980 | 12406.5 |
| 2 | ท่อ ค.ส. Ø 12 ASQC ASTM 3760-98 (ISO 6935) | L = | 1 | L = 4660 | 1 x 3 | 13980 | 16892.7 |
| | ลึกเฉลี่ย วัสดุที่ใช้ B25 | V = 466 | x 1 | = | 466 | ลบ.ม. | |

**ปริมาณงานดินขุดและถมกลับ ชนิดที่ 26 ขุดลึก 69.00 ม. ขึ้นไป**

**ปริมาณงานดินขุดและถมกลับ**

| | | | | | | | |
|---|---|---|---|---|---|---|---|
| | | | | | | | |
| 1 | ท่อ ค.ส. Ø 10 ASQC ASTM 3760-98 (ISO 6935) | L = | 1 | L = 4660 | 1 x 3 | 13980 | 12406.5 |
| 2 | ท่อ ค.ส. Ø 12 ASQC ASTM 3760-98 (ISO 6935) | L = | 1 | L = 4660 | 1 x 3 | 13980 | 16892.7 |
| | ลึกเฉลี่ย วัสดุที่ใช้ B25 | V = 466 | x 1 | = | 466 | ลบ.ม. | |

**ปริมาณงานดินขุดและถมกลับ ชนิดที่ 27 ขุดลึก 72.00 ม. ขึ้นไป**

**ปริมาณงานดินขุดและถมกลับ**

| | | | | | | | |
|---|---|---|---|---|---|---|---|
| | | | | | | | |
| 1 | ท่อ ค.ส. Ø 10 ASQC ASTM 3760-98 (ISO 6935) | L = | 1 | L = 4660 | 1 x 3 | 13980 | 12406.5 |
| 2 | ท่อ ค.ส. Ø 12 ASQC ASTM 3760-98 (ISO 6935) | L = | 1 | L = 4660 | 1 x 3 | 13980 | 16892.7 |
| | ลึกเฉลี่ย วัสดุที่ใช้ B25 | V = 466 | x 1 | = | 466 | ลบ.ม. | |

**ปริมาณงานดินขุดและถมกลับ ชนิดที่ 28 ขุดลึก 75.00 ม. ขึ้นไป**

**ปริมาณงานดินขุดและถมกลับ**

| | | | | | | | |
|---|---|---|---|---|---|---|---|
| | | | | | | | |
| 1 | ท่อ ค.ส. Ø 10 ASQC ASTM 3760-98 (ISO 6935) | L = | 1 | L = 4660 | 1 x 3 | 13980 | 12406.5 |
| 2 | ท่อ ค.ส. Ø 12 ASQC ASTM 3760-98 (ISO 6935) | L = | 1 | L = 4660 | 1 x 3 | 13980 | 16892.7 |
| | ลึกเฉลี่ย วัสดุที่ใช้ B25 | V = 466 | x 1 | = | 466 | ลบ.ม. | |

**ปริมาณงานดินขุดและถมกลับ ชนิดที่ 29 ขุดลึก 78.00 ม. ขึ้นไป**

**ปริมาณงานดินขุดและถมกลับ**

| | | | | | | | |
|---|---|---|---|---|---|---|---|
| | | | | | | | |
| 1 | ท่อ ค.ส. Ø 10 ASQC ASTM 3760-98 (ISO 6935) | L = | 1 | L = 4660 | 1 x 3 | 13980 | 12406.5 |
| 2 | ท่อ ค.ส. Ø 12 ASQC ASTM 3760-98 (ISO 6935) | L = | 1 | L = 4660 | 1 x 3 | 13980 | 16892.7 |
| | ลึกเฉลี่ย วัสดุที่ใช้ B25 | V = 466 | x 1 | = | 466 | ลบ.ม. | |

**ปริมาณงานดินขุดและถมกลับ ชนิดที่ 30 ขุดลึก 81.00 ม. ขึ้นไป**

**ปริมาณงานดินขุดและถมกลับ**

| | | | | | | | |
|---|---|---|---|---|---|---|---|
| | | | | | | | |
| 1 | ท่อ ค.ส. Ø 10 ASQC ASTM 3760-98 (ISO 6935) | L = | 1 | L = 4660 | 1 x 3 | 13980 | 12406.5 |
| 2 | ท่อ ค.ส. Ø 12 ASQC ASTM 3760-98 (ISO 6935) | L = | 1 | L = 4660 | 1 x 3 | 13980 | 16892.7 |
| | ลึกเฉลี่ย วัสดุที่ใช้ B25 | V = 466 | x 1 | = | 466 | ลบ.ม. | |

**ปริมาณงานดินขุดและถมกลับ ชนิดที่ 31 ขุดลึก 84.00 ม. ขึ้นไป**

**ปริมาณงานดินขุดและถมกลับ**

| | | | | | | | |
|---|---|---|---|---|---|---|---|
| | | | | | | | |
| 1 | ท่อ ค.ส. Ø 10 ASQC ASTM 3760-98 (ISO 6935) | L = | 1 | L = 4660 | 1 x 3 | 13980 | 12406.5 |
| 2 | ท่อ ค.ส. Ø 12 ASQC ASTM 3760-98 (ISO 6935) | L = | 1 | L = 4660 | 1 x 3 | 13980 | 16892.7 |
| | ลึกเฉลี่ย วัสดุที่ใช้ B25 | V = 466 | x 1 | = | 466 | ลบ.ม. | |

**ปริมาณงานดินขุดและถมกลับ ชนิดที่ 32 ขุดลึก 87.00 ม. ขึ้นไป**

**ปริมาณงานดินขุดและถมกลับ**

| | | | | | | | |
|---|---|---|---|---|---|---|---|
| | | | | | | | |
| 1 | ท่อ ค.ส. Ø 10 ASQC ASTM 3760-98 (ISO 6935) | L = | 1 | L = 4660 | 1 x 3 | 13980 | 12406.5 |
| 2 | ท่อ ค.ส. Ø 12 ASQC ASTM 3760-98 (ISO 6935) | L = | 1 | L = 4660 | 1 x 3 | 13980 | 16892.7 |
| | ลึกเฉลี่ย วัสดุที่ใช้ B25 | V = 466 | x 1 | = | 466 | ลบ.ม. | |

**ปริมาณงานดินขุดและถมกลับ ชนิดที่ 33 ขุดลึก 90.00 ม. ขึ้นไป**

**ปริมาณงานดินขุดและถมกลับ**

| | | | | | | | |
|---|---|---|---|---|---|---|---|
| | | | | | | | |
| 1 | ท่อ ค.ส. Ø 10 ASQC ASTM 3760-98 (ISO 6935) | L = | 1 | L = 4660 | 1 x 3 | 13980 | 12406.5 |
| 2 | ท่อ ค.ส. Ø 12 ASQC ASTM 3760-98 (ISO 6935) | L = | 1 | L = 4660 | 1 x 3 | 13980 | 16892.7 |
| | ลึกเฉลี่ย วัสดุที่ใช้ B25 | V = 466 | x 1 | = | 466 | ลบ.ม. | |

**ปริมาณงานดินขุดและถมกลับ ชนิดที่ 34 ขุดลึก 93.00 ม. ขึ้นไป**

**ปริมาณงานดินขุดและถมกลับ**

| | | | | | | | |
|---|---|---|---|---|---|---|---|
| | | | | | | | |
| 1 | ท่อ ค.ส. Ø 10 ASQC ASTM 3760-98 (ISO 6935) | L = | 1 | L = 4660 | 1 x 3 | 13980 | 12406.5 |
| 2 | ท่อ ค.ส. Ø 12 ASQC ASTM 3760-98 (ISO 6935) | L = | 1 | L = 4660 | 1 x 3 | 13980 | 16892.7 |
| | ลึกเฉลี่ย วัสดุที่ใช้ B25 | V = 466 | x 1 | = | 466 | ลบ.ม. | |

**ปริมาณงานดินขุดและถมกลับ ชนิดที่ 35 ขุดลึก 96.00 ม. ขึ้นไป**

**ปริมาณงานดินขุดและถมกลับ**

| | | | | | | | |
|---|---|---|---|---|---|---|---|
| | | | | | | | |
| 1 | ท่อ ค.ส. Ø 10 ASQC ASTM 3760-98 (ISO 6935) | L = | 1 | L = 4660 | 1 x 3 | 13980 | 12406.5 |
| 2 | ท่อ ค.ส. Ø 12 ASQC ASTM 3760-98 (ISO 6935) | L = | 1 | L = 4660 | 1 x 3 | 13980 | 16892.7 |
| | ลึกเฉลี่ย วัสดุที่ใช้ B25 | V = 466 | x 1 | = | 466 | ลบ.ม. | |

**ปริมาณงานดินขุดและถมกลับ ชนิดที่ 36 ขุดลึก 99.00 ม. ขึ้นไป**

**ปริมาณงานดินขุดและถมกลับ**

| | | | | | | | |
|---|---|---|---|---|---|---|---|
| | | | | | | | |
| 1 | ท่อ ค.ส. Ø 10 ASQC ASTM 3760-98 (ISO 6935) | L = | 1 | L = 4660 | 1 x 3 | 13980 | 12406.5 |
| 2 | ท่อ ค.ส. Ø 12 ASQC ASTM 3760-98 (ISO 6935) | L = | 1 | L = 4660 | 1 x 3 | 13980 | 16892.7 |
| | ลึกเฉลี่ย วัสดุที่ใช้ B25 | V = 466 | x 1 | = | 466 | ลบ.ม. | |

**ปริมาณงานดินขุดและถมกลับ ชนิดที่ 37 ขุดลึก 102.00 ม. ขึ้นไป**

**ปริมาณงานดินขุดและถมกลับ**

| | | | | | | | |
|---|---|---|---|---|---|---|---|
| | | | | | | | |
| 1 | ท่อ ค.ส. Ø 10 ASQC ASTM 3760-98 (ISO 6935) | L = | 1 | L = 4660 | 1 x 3 | 13980 | 12406.5 |
| 2 | ท่อ ค.ส. Ø 12 ASQC ASTM 3760-98 (ISO 6935) | L = | 1 | L = 4660 | 1 x 3 | 13980 | 16892.7 |
| | ลึกเฉลี่ย วัสดุที่ใช้ B25 | V = 466 | x 1 | = | 466 | ลบ.ม. | |

**ปริมาณงานดินขุดและถมกลับ ชนิดที่ 38 ขุดลึก 105.00 ม. ขึ้นไป**

**ปริมาณงานดินขุดและถมกลับ**

| | | | | | | | |
|---|---|---|---|---|---|---|---|
| | | | | | | | |
| 1 | ท่อ ค.ส. Ø 10 ASQC ASTM 3760-98 (ISO 6935) | L = | 1 | L = 4660 | 1 x 3 | 13980 | 12406.5 |
| 2 | ท่อ ค.ส. Ø 12 ASQC ASTM 3760-98 (ISO 6935) | L = | 1 | L = 4660 | 1 x 3 | 13980 | 16892.7 |
| | ลึกเฉลี่ย วัสดุที่ใช้ B25 | V = 466 | x 1 | = | 466 | ลบ.ม. | |

**ปริมาณงานดินขุดและถมกลับ ชนิดที่ 39 ขุดลึก 108.00 ม. ขึ้นไป**

**ปริมาณงานดินขุดและถมกลับ**

| | | | | | | | |
|---|---|---|---|---|---|---|---|
| | | | | | | | |
| 1 | ท่อ ค.ส. Ø 10 ASQC ASTM 3760-98 (ISO 6935) | L = | 1 | L = 4660 | 1 x 3 | 13980 | 12406.5 |
| 2 | ท่อ ค.ส. Ø 12 ASQC ASTM 3760-98 (ISO 6935) | L = | 1 | L = 4660 | 1 x 3 | 13980 | 16892.7 |
| | ลึกเฉลี่ย วัสดุที่ใช้ B25 | V = 466 | x 1 | = | 466 | ลบ.ม. | |

**ปริมาณงานดินขุดและถมกลับ ชนิดที่ 40 ขุดลึก 111.00 ม. ขึ้นไป**

**ปริมาณงานดินขุดและถมกลับ**

| | | | | | | | |
|---|---|---|---|---|---|---|---|
| | | | | | | | |
| 1 | ท่อ ค.ส. Ø 10 ASQC ASTM 3760-98 (ISO 6935) | L = | 1 | L = 4660 | 1 x 3 | 13980 | 12406.5 |
| 2 | ท่อ ค.ส. Ø 12 ASQC ASTM 3760-98 (ISO 6935) | L = | 1 | L = 4660 | 1 x 3 | 13980 | 16892.7 |
| | ลึกเฉลี่ย วัสดุที่ใช้ B25 | V = 466 | x 1 | = | 466 | ลบ.ม. | |

**ปริมาณงานดินขุดและถมกลับ ชนิดที่ 41 ขุดลึก 114.00 ม. ขึ้นไป**

**ปริมาณงานดินขุดและถมกลับ**

| | | | | | | | |
|---|---|---|---|---|---|---|---|
| | | | | | | | |
| 1 | ท่อ ค.ส. Ø 10 ASQC ASTM 3760-98 (ISO 6935) | L = | 1 | L = 4660 | 1 x 3 | 13980 | 12406.5 |
| 2 | ท่อ ค.ส. Ø 12 ASQC ASTM 3760-98 (ISO 6935) | L = | 1 | L = 4660 | 1 x 3 | 13980 | 16892.7 |
| | ลึกเฉลี่ย วัสดุที่ใช้ B25 | V = 466 | x 1 | = | 466 | ลบ.ม. | |

**ปริมาณงานดินขุดและถมกลับ ชนิดที่ 42 ขุดลึก 117.00 ม. ขึ้นไป**

**ปริมาณงานดินขุดและถมกลับ**

| | | | | | | | |
|---|---|---|---|---|---|---|---|
| | | | | | | | |
| 1 | ท่อ ค.ส. Ø 10 ASQC ASTM 3760-98 (ISO 6935) | L = | 1 | L = 4660 | 1 x 3 | 13980 | 12406.5 |
| 2 | ท่อ ค.ส. Ø 12 ASQC ASTM 3760-98 (ISO 6935) | L = | 1 | L = 4660 | 1 x 3 | 13980 | 16892.7 |
| | ลึกเฉลี่ย วัสดุที่ใช้ B25 | V = 466 | x 1 | = | 466 | ลบ.ม. | |

**ปริมาณงานดินขุดและถมกลับ ชนิดที่ 43 ขุดลึก 120.00 ม. ขึ้นไป**

**ปริมาณงานดินขุดและถมกลับ**

| | | | | | | | |
|---|---|---|---|---|---|---|---|
| | | | | | | | |
| 1 | ท่อ ค.ส. Ø 10 ASQC ASTM 3760-98 (ISO 6935) | L = | 1 | L = 4660 | 1 x 3 | 13980 | 12406.5 |
| 2 | ท่อ ค.ส. Ø 12 ASQC ASTM 3760-98 (ISO 6935) | L = | 1 | L = 4660 | 1 x 3 | 13980 | 16892.7 |
| | ลึกเฉลี่ย วัสดุที่ใช้ B25 | V = 466 | x 1 | = | 466 | ลบ.ม. | |

**ปริมาณงานดินขุดและถมกลับ ชนิดที่ 44 ขุดลึก 123.00 ม. ขึ้นไป**

**ปริมาณงานดินขุดและถมกลับ**

| | | | | | | | |
|---|---|---|---|---|---|---|---|
| | | | | | | | |
| 1 | ท่อ ค.ส. Ø 10 ASQC ASTM 3760-98 (ISO 6935) | L = | 1 | L = 4660 | 1 x 3 | 13980 | 12406.5 |
| 2 | ท่อ ค.ส. Ø 12 ASQC ASTM 3760-98 (ISO 6935) | L = | 1 | L = 4660 | 1 x 3 | 13980 | 16892.7 |
| | ลึกเฉลี่ย วัสดุที่ใช้ B25 

| № п/п | Наименование работ | Ед. изм. | Объем работ | Трудоемкость, чел.-ч | Продолжительность работ, дн. | Состав звена |
|---|---|---|---|---|---|---|
| 1 | Разработка грунта экскаватором с погрузкой в самосвал | 1000 м³ | 12,4 | 1860 | 23 | Машинист 6 разр. – 1, Помощник машиниста 4 разр. – 1 |
| 2 | Устройство песчаного основания толщиной 100 мм | 100 м² | 86 | 344 | 5 | Монтажник 3 разр. – 2, Монтажник 2 разр. – 1 |
| 3 | Монтаж сборных железобетонных плит перекрытия массой до 3 т | шт. | 412 | 1236 | 16 | Монтажник 4 разр. – 1, Монтажник 3 разр. – 2, Монтажник 2 разр. – 1 |
| 4 | Монтаж стеновых панелей наружных массой до 5 т | шт. | 268 | 1072 | 14 | Монтажник 4 разр. – 1, Монтажник 3 разр. – 2, Монтажник 2 разр. – 1 |
| 5 | Устройство монолитных участков перекрытия | м³ | 38,5 | 462 | 6 | Бетонщик 3 разр. – 2, Бетонщик 2 разр. – 1 |
| 6 | Кладка перегородок из газобетонных блоков | м³ | 64,2 | 513,6 | 8 | Каменщик 3 разр. – 2, Каменщик 2 разр. – 1 |
| 7 | Устройство кровли рулонной наплавляемой | 100 м² | 12,5 | 375 | 5 | Кровельщик 3 разр. – 2, Кровельщик 2 разр. – 1 |
| 8 | Монтаж оконных блоков | м² | 1 860 | 930 | 12 | Монтажник 3 разр. – 2, Монтажник 2 разр. – 1 |
| 9 | Монтаж дверных блоков | м² | 1 240 | 620 | 8 | Монтажник 3 разр. – 2, Монтажник 2 разр. – 1 |
| 10 | Штукатурка внутренних поверхностей | м² | 2 150 | 645 | 9 | Штукатур 3 разр. – 2, Штукатур 2 разр. – 1 |
| 11 | Окраска стен водоэмульсионными составами | м² | 2 150 | 430 | 6 | Маляр 3 разр. – 2, Маляр 2 разр. – 1 |
| 12 | Устройство стяжки пола цементной толщиной 30 мм | м² | 1 720 | 516 | 7 | Бетонщик 3 разр. – 2, Бетонщик 2 разр. – 1 |
| 13 | Укладка керамической плитки на пол | м² | 1 720 | 688 | 9 | Плиточник 3 разр. – 2, Плиточник 2 разр. – 1 |
| 14 | Монтаж внутренних инженерных сетей | компл. | 24 | 384 | 10 | Слесарь-сантехник 4 разр. – 1, Слесарь-сантехник 3 разр. – 1 |
| 15 | Монтаж электрооборудования и освещения | компл. | 24 | 288 | 8 | Электромонтажник 4 разр. – 1, Электромонтажник 3 разр. – 1 |
| 16 | Благоустройство территории, уборка строительного мусора | 100 м² | 18 | 270 | 4 | Рабочий 2 разр. – 2, Рабочий 1 разр. – 1 |

# შ.პ.ს. „ჰიდროგეოპროექტი“ - L.T.D. „HIDROGEOPROJECT“

## 205175415

№12-08/23 „12’’ივნისი 2023 წ.

საექსპერტო დასკვნა

თბილისში, ბაგებში, წყნეთის გზატკეცილი №40-40ა (ს.კ.01.14.08.001.600) მრავალბინიანი საცხოვრებელი სახლის პროექტის კონსტრუქციული ნაწილისათვის

ექსპერტიზისათვის გადმოცემულია თბილისში, ზემოაღნიშნულ მისამართზე, მრავალბინიანი საცხოვრებელი სახლის პროექტი.

ექსპერტიზისათვის გადმოცემულია შემდეგი მასალა:

- პროექტის არქიტექტურული ნაწილი, დამუშავებული შ.პ.ს. „არკო“-ს მიერ, ელექტრონული სახაზავი პროგრამა ”ArchiCAD”-ის გამოყენებით. (ელექტრონული ვერსია).
- პროექტის კონსტრუქციული ნაწილი, დამუშავებული შ.პ.ს. „მონოლითი+“-ს მიერ ელექტრონული სახაზავი პროგრამა ”AutoCAD”-ის გამოყენებით A-2 და A-3 ტიპის ფურცლებზე. (ელექტრონული ვერსია).
- საინჟინრო-გეოლოგიური დასკვნა. ავტორი შ.პ.ს ,, გენგეო’’.

## კონსტრუქციების აღწერა.

კონსტრუქციული მოსაზრებით შენობის ზედნაშენი გაყოფილია სეისმური ნაკერით პირობითად A და B ბლოკებად (რაც ასახულია საანგარიშო მოდელში).

B ბლოკი

საპროექტო შენობა ღერძებში "1"-"10" და "ა"-"დ" 7 სართულიანია, მართკუთხა მოხაზულობის, ზომებით ღერძებში LXB=42.6X18.6მ

შენობის სიმაღლე განსაზღვრულია შემდეგნაირად: შენობა ღერზებში "1"-"10" და "ა"-"დ" 7 სართულიანია,
I სართული, ავტოფარეხი , იატაკის ფილის თავის ნიშნ. -6.60 სართულის სიმაღლით 3.30
II სართული, ავტოფარეხი, გადახურვის ფილის თავის ნიშნ. -3.30 სართულის სიმაღლით 3.60
III სართული, გადახურვის ფილის თავის ნიშნ. 0.30 სართულის სიმაღლით 3.00
IV სართული, გადახურვის ფილის თავის ნიშნ. 6.60 სართულის სიმაღლით 3.30
V სართული სიმაღლით 3.30 გადახურვის ფილის თავის ნიშნ. 9.90 სართულის სიმაღლით 3.30
VI სართული სიმაღლით 3.30 გადახურვის ფილის თავის ნიშნ. 13.20 სართულის სიმაღლით 3.30
VII სართული სიმაღლით 3.30 გადახურვის ფილის თავის ნიშნ. 16.50 სართულის სიმაღლით 3.30
VIII სართულის კიბის უჯრედი სიმაღლით 2.64 გადახურვის ფილის თავის ნიშნ. 19.14

A ბლოკი

ღერძებში "ე"-"თ" და "1"-"6" 7 სართულიანია, ტრაპეციული მოხაზულობის ზომებით LXB=19.2X21მ ხოლო ღერძებში "ო-რ" და "ი"-"ნ" 6 სართულიანია, ოთკუთხა მოხაზულობის, ზომებით LXB=28X18.55მ

შენობა ღერზებში "1"-"6" და "ე"-"თ" 7 სართულიანია,
I სართული, ავტოფარეხი , იატაკის ფილის თავის ნიშნ. -6.60 სართულის სიმაღლით 3.30
II სართული, ავტოფარეხი, გადახურვის ფილის თავის ნიშნ. -3.30 სართულის სიმაღლით 3.30
III სართული, გადახურვის ფილის თავის ნიშნ. ±0.00 სართულის სიმაღლით 3.30
IV სართული, გადახურვის ფილის თავის ნიშნ. 6.60 სართულის სიმაღლით 3.30
V სართული სიმაღლით 3.30 გადახურვის ფილის თავის ნიშნ. 9.90 სართულის სიმაღლით 3.30
VI სართული სიმაღლით 3.30 გადახურვის ფილის თავის ნიშნ. 13.20 სართულის სიმაღლით 3.30

VII სართული სიმაღლით 3.30 გადახურვის ფილის თავის ნიშნ. 16.50 სართულის სიმაღლით 3.30

შენობა ღერძებში "ო"-"რ" და "ი"-"ნ" 6 სართულიანია,
I სართული, ავტოფარეხი , იატაკის ფილის თავის ნიშნ. -6.60 სართულის სიმაღლით 3.30
II სართული, ავტოფარეხი, გადახურვის ფილის თავის ნიშნ. -3.30 სართულის სიმაღლით 3.30
III სართული, გადახურვის ფილის თავის ნიშნ. ±0.00 სართულის სიმაღლით 3.30
IV სართული, გადახურვის ფილის თავის ნიშნ. 6.60 სართულის სიმაღლით 3.30
V სართული სიმაღლით 3.30 გადახურვის ფილის თავის ნიშნ. 9.90 სართულის სიმაღლით 3.30
VI სართული სიმაღლით 3.30 გადახურვის ფილის თავის ნიშნ. 13.20 სართულის სიმაღლით 3.30
VII კიბის უჯრედი, სიმაღლით 3.30 გადახურვის ფილის თავის ნიშნ. 16.50 სართულის სიმაღლით 3.30

შენობის მზიდი სისტემა გადაწყვეტილია ჩარჩოვანი სივრცული სისტემის სახით, მონოლითური სართულშუა გადახურვებით, რომლებიც ასრულებენ სისტემის ჰორიზონტალური დისკოს როლს. ფილის წიბოები, რომლებიც ქმნიან კესონური გადახურვის ეფექტს, გათვალისწინებულია ყველა ღერძის გასწვრივ.
ჩარჩოს სვეტების განივი კვეთებია 400X1000მმ 600X600მმ 500X500მმ 400X400მმ
რიგელების 400X500მმ 400X600მმ 250X500მმ
გადახურვები-მონოლითური რკინ.ბეტ. ფილა სისქით -200მმ და 160მმ
სახურავი-მონოლითური რკინ.ბეტ. ფილა სისქით - 160მმ
კიბეები-მონ.რკინ.ბეტ. ჩანები და ბაქნები სისქით 160მმ. საფეხურები მონოლითური რკინაბეტონის.
საინჟინრო-გეოლოგიური დასკვნის თანახმად, შენობის საძირკვლის ფუძედ მიღებულია I სგე, არგელიტების და ქვიშაქვების შრეობრივი მორიგეობა, სიმტკიცის ზღვარით ერთღერძა კუმშვაზე R=95.9 კგძ/სმ² პირობით ნიშნულად ±0.00 მიღებულია მშენებარე შენობის I სართულის იატაკის თავის ნიშნული, რომელიც შეესაბამება აბსოლუტურ ნიშნულს გენგეგმაზე (540.00) შენობის პერიმეტრზე ჩარჩოების შესავსებად გამოყენებულია წვრილგანზომილებიანი M-50 მარკის პემზობეტონის ბლოკები M-25 მარკის პლასტიფიცირებულ

ქვიშაცემენტის ხსნარზე ზაფხულის პირობებში და M-50 მარკის პლასტიფიცირებულ ქვიშაცემენტის ხსნარზე ზამთრის პირობებში.

პროექტში გათვალისწინებულია შემდეგი კლიმატური მონაცემები:
ქარის ჩქაროსნული ნორმატიული დაწნევა-45კგ/მ²
თოვლის ნორმატიული დატვირთვა-50კგ/მ²

პროექტი გაანგარიშებულია ავტომატური საანგარიშო კომპლექსი „Лира 9,4“-ის გამოყენებით, 8 ბალიან სეისმურ ზემოქმედებაზე.

## დასკვნა:

საპროექტო ორგანიზაცია შ.პ.ს. ”მონოლითი+“-ს მიერ პროექტი გაანგარიშებულია და შედგენილია სამშენებლო ნორმებისა და წესების მოთხოვნათა სრული დაცვით, რაც უზრუნველყოფს შენობის უსაფრთხო მუშაობას საექსპლოატაციო პერიოდში მასზე მოსალოდნელი შესაძლო საანგარიშო სეისმური ზემოქმედებისას. გრაფიკული მასალა მდიდარია და იძლევა საშუალებას მაღალხარისხოვანი მშენებლობის წარმოებისათვის.

## შენიშვნები:

პროექტის მიმართ შენიშვნები არა გვაქვს და რეკომენდაცია ეწევა განსახორციელებლად.

შ.პ.ს. ”ჰიდროპროექტი”-ს
დირექტორი /ნ. ქიქავა/

# დიპლომი

КВ № 153469

ეს დიპლომი მიეცა ნიკოლოზ
ელგუჯასძე კიკავას
მასზე, რომ იგი 1980 წელს შევიდა
საქართველოს ვ.ი. ლენინის სახელობის
პოლიტექნიკურ ინსტიტუტში
და 1985 წელს დაამთავრა
აღნიშნული
ინსტიტუტის
სრული კურსი სპეციალობით
ხიდები და გვირაბები

სახელმწიფო საგამოცდო კომისიის 1985 წ.
„29" ივნისის გადაწყვეტილებით
ნ.ე. კიკავას მიენიჭა ინჟინერ-
მშენებლის
კვალიფიკაცია.

სახელმწიფო საგამოცდო
კომისიის თავმჯდომარე
რექტორი
მდივანი

ბ. ა.

ქალაქი თბილისი 1986 წ. „21" 04

სარეგისტრაციო № 0935

Грузинский яз.

# ДИПЛОМ

КВ № 153469

Настоящий диплом выдан Кикава
Николаю Элгуджовичу
в том, что он в 1980 году поступил
в Грузинский политехнический
институт им. В.И. Ленина
и в 1985 году окончил полный курс
названного
института
по специальности
мосты и тоннели

Решением Государственной экзаменационной
комиссии от „29" июня 1985 г.
Кикава Н.Э.
присвоена квалификация инженера
строителя

Председатель Государственной
экзаменационной комиссии
Ректор
Секретарь

М. П.

Город Тбилиси „21" 04 1986 г.

Регистрационный № 0935

Московская типография Гознака, 1982.

Georgia

IDENTITY CARD

მოქალაქის პირადობის მოწმობა

საქართველო

GEO

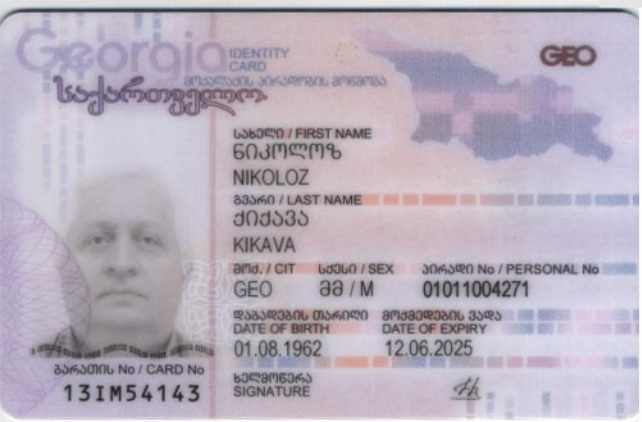

სახელი / FIRST NAME
ნიკოლოზ
NIKOLOZ

გვარი / LAST NAME
ქიქავა
KIKAVA

მოქ. / CIT: GEO
სქესი / SEX: მ / M
პირადი No / PERSONAL No: 01011004271

დაბადების თარიღი / DATE OF BIRTH: 01.08.1962
მოქმედების ვადა / DATE OF EXPIRY: 12.06.2025

ბარათის No / CARD No: 13IM54143

ხელმოწერა / SIGNATURE

დაბადების ადგილი / PLACE OF BIRTH
ხაშური
KHASHURI

გაცემის თარიღი / DATE OF ISSUE
12.06.2015

გამცემი ორგანო / ISSUING AUTHORITY
იუსტიციის სამინისტრო
MINISTRY OF JUSTICE

დამკვეთი: სსს, დამგმზადებელი: MB-IDS 2014
სსს-ს რეგისტრაციის No 26-3184

IDGE013IM54143901011004271<<<<
6208015M2506126GE0<<<<<<<<<<<5
KIKAVA<<NIKOLOZ<<<<<<<<<<<<<<

# ნიკოლოზ ქიქავა

მისამართი: ალ. ყაზბეგის გამზ. N4
300060 თბილისი,
საქართველო
მობ : 551-310-160
597-203-806.
ელ-ფოსტა: nikokikava@yahoo.com

---

**პერსონარული ინფორმაცია**

სქესი – მამრობითი
ოჯახური მდგომარეობა.--- დაოჯახებული
დაბადების თარიღი – 01.08.1962

**სამუშაო გამოცდილებ**

2014-----დღემდე „ცენტრპოინტ ჯგუფი“ ხარჯთაღმრიცხველი.

2011 – 2014 შპს. I C E S-ში სამუშაოთა მწარმოებლად.

2008-2011 წწ-თავდაცვის სამინისტროს საინჟინრო ბატალიონი. ინჟინერ-მშენებელი.
(მომარაგების განყოფილება)
2006–2008 შ.პ.ს ,,ახალი ქართული ჯგუფი” სამუშაოთა მწარმოებელი.

2004–2005 შ.პ.ს ,,ხიდი’’ მწვანე კონცხის სარკინიგზო გვირაბის სარეაბილიტაციო სამუშაოები. სამუშაოთა მწარმოებელი.

2000–2004 მეტალოპლასტმასისა და ლითონნაკეთობათა საამქროს უფროსი.

1993–1995- „თელასი“. მომარაგების განყოფილება.

1989-1990—სპმკ-15. დმანისში სტიქიით დაზარალებულტათვის სახლების მშენებლობა.
(კანალიზაცია, გათბობა. ცივი და ცხელი წყალი. სახლებსი შეყვანა)
1986–1989 ,თბილმეტრომშენს’’–ს TO-32 სამუშაოთა მწარმოებელი. სადგური ,,ვაჟა-ფშაველა’’.

1985–1986 საქ.სახ.გზამკვლევი– კვლევითი ინსტიტუტი ინჟინერი. ხიდების საცდელი ლაბორატორია.

**განათლება**

1980–1985 საქართველოს ტექნიკური უნივერსიტეტის სატრანსპორტო ფაკ–ტი.
ხიდები და გვირაბები.
1969–1979 ქ.თბილისის 161–ე საშუალო სკოლა.
ენები- ქართული. რუსული ძალიან კარგად. ინგლისური ლექსიკონით.

**IT უნარები**

**საოფისე პროგრამები-** AutoCAD. MS. Word. Ms . Excel. Internet
**მართვის მოწმობა** B კატეგორია.