-

,

. . . . . .

s.k.(# 01.13.01.022.194-01.13.01.022.198)

2024.

მოკლე განმარტებითი ბარათი

( ) , Ã – ñ
, /
.
, Ã – ñ
- ,
´
, .
- ,
01.13.01.022.194-01.13.01.022.198
. ´ ,

D500 - .
´ :

· : h - 1.20/1.50 .
· : SN8 D 100; ´ - L 36.50 .
· : PE100 SDR11 PN16 D 63; ´ - L 99
· ~ : 2 .

*
.
*
´ .
* H=1,5 , ~
.

naxazebis uwyisi

# rigze	naxazis dasaxeleba	furc. #
1.	saerTo monacemebi.	k-1
2.	situaciis asmaxveli fotomasala.	k-2
3.	teritoriis gegma arsebuli da saproeqto qselebis dataniT.	k-3
4.	kanalizaciis milis grZivi profili	k-4
5.	kanalizaciis grZivi profili	k-5
6.	mrgvali Webis konstruqciuli elementebis gadabmis kvanZi	k-6
7.	Wis qvabulis da miwis Txrilis gamagrebis kvanZi	k-7

saerTo miTiTebebi

1. miwis samuSaoebis dawyebamde dazustebuli iqnas miwisqveSa komunikaciebis arseboba da maTi CaRrmaveba.
2. samontaJo samuSaoebis warmoeba ganxorcieldes СНИП 3.05.04-85 miTiTebebis dacviT
4. samuSaoebis dasrulebis Semdeg milsadeni gamoicados dawesebuli normebis Tanaxmad.

(№)
. . .
. . .
:
:
-
, ...
s.k.(# 01.13.01.022.194-01.13.01.022.198)
:
´
:
( )
:
( )
: , 2024

	-1	A3









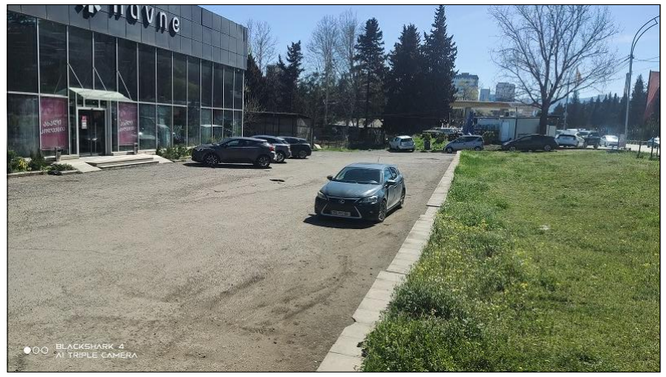









gwp

(№)

. . .
. . .

:

:

-

,

. . .

. . .

s.k.(# 01.13.01.022.194-01.13.01.022.198)

:

:

( )

:

( )

: , 2024

	-2	A3

sap. kan. Wa #2
d=1.50 m h=3.20m

krotis dgomis
adgili 9X3

aRs. asfaltis
safari 12m².
qvabuli 4X3

sap. kan. **PE100 SDR11 PN16**
d=63mm mili gauqmeba
gadaerTebis Semdeg. **L=11**m

gadaerTebis adgili

sap. kan. **PE100 SDR11 PN16**
d=63mm mili **L=74**m
wneviani
krotiT

sap. kan. **PE100 SDR11 PN16**
d=63mm mili **L=20**m
wneviani
Ria wesiT

saventilacio foladis
d=50 mm mili filtriT

sap. kan. gof. **SN8**
d=100mm mili L=2m

aTvisebuli teritoria

ars. san. Wa
d=1.00 m h=1.60m

ars. san. Wa
d=1.00 m h=1.50m

ars. kan. Wa
d=1.50 m h=2.80m

sap. kan. **PE100 SDR11 PN16**
d=63mm mili **L=5**m
Ria wesiT

ars. san. Wa
d=1.00 m h=1.00m

S.p.s. "oranJerea"
s.k.(#01.13.01.022.194)

sap. miwisqveSa
wyalarinebis
satumbo sadguri (1+1)
Q=0.5 l/wm H=6-8 m

sap. kan. Wa #1
d=1.00 m h=2.20m

sap. kan. gof. **SN8**
d=100mm mili L=1.50m

aRs. asfaltis
safari 134.50m².

av. marTvis karadasTan
misayvani el. kabeli **L=15**m
mSeneblobis procesSi
dazustdes manZili

sap. kan. gof. **SN8**
d=100mm mili L=33m

S.p.s. "kontinentali"
s.k.(#01.13.01.022.198)

pirobiTi aRniSvnebi:
- adgilobrivi grunti
- xreSovani safari
- servitutiT datvirTuli gza
- aRs. asfaltis safari
- asfaltis konturi
- obieqtis wiTeli xazebi
- qvabuli

(№)

. . .
. . .

:

:
-
,
. . . . . .
s.k.(#01.13.01.022.194-01.13.01.022.198)

:
,

:
( )

:
( )

: , 2024

.

1:250	-2	A3

kana l i zac i i s qse l i s gr Zivi p r o f i l i
masS t abi v 1:100 h 1:500

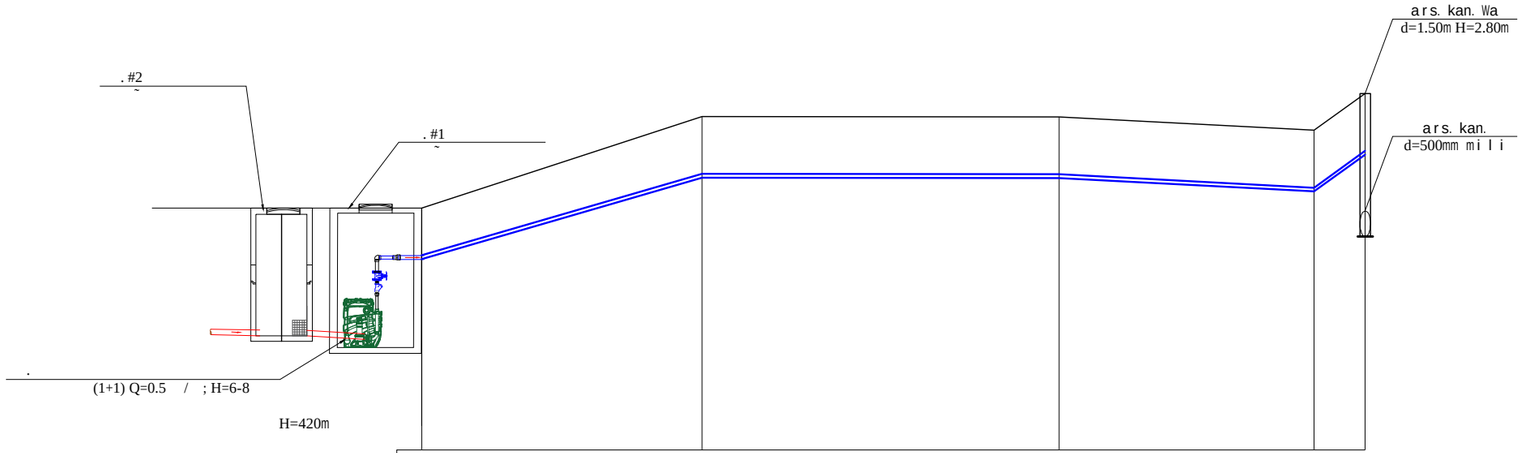

sap. wya l s. p o l . **PE 100 SDR11 PN16 d**=63mm m i l i **L**=**118**m.

mi l is masa l a diam. sigrZe mi l is Ziris niSnu l i					
mi l is CaRrmaveba	1.00	1.20	1.20	1.20	1.20
mi l is Ziris niSnu l i	423.74	425.34	425.33	425.07	425.78
miwis zedapiris niSnu l i	424.74	426.54	426.53	426.27	426.98
si tuacia		27.50	35.00	25.00	5.00
qanobi / sigrZe					
	w	w	w	w	w	w
ku Txeebi					

(№)

. . .
. . .

:

:

-

,

. . . . . .

s.k.(# 01.13.01.022.194-01.13.01.022.198)

:

:

( )

:

( )

: , 2024

	-4	A3

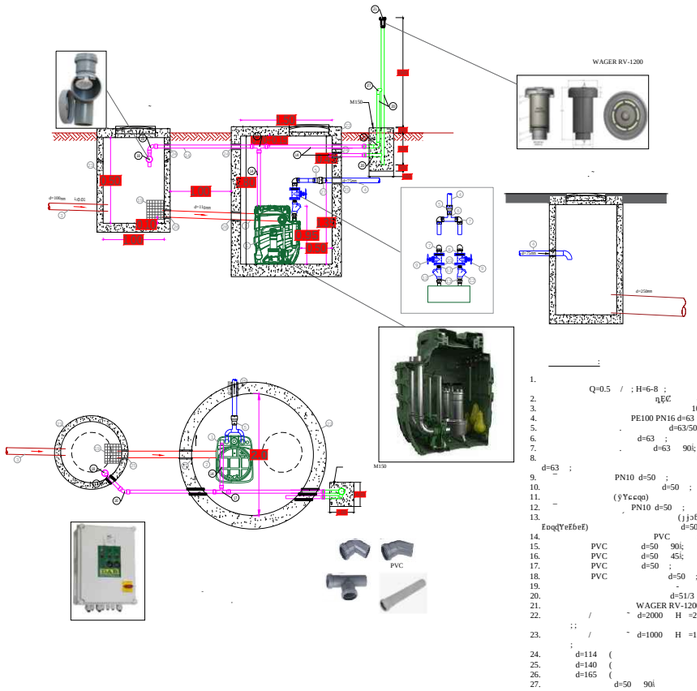

1. Q=0.5 / ; H=6-8 ;
2. ηĘĆ d=110 ;
3. 100 ;
4. PE100 PN16 d=63 ;
5. . d=63/50 ;
6. d=63 ;
7. . d=63 90i;
8. PE100 PN16 d=63 ;
9. PN10 d=50 ;
10. d=50 ;
11. (ÿYєєqo) d=50 ;
12. ¯ , PN10 d=50 ;
13. (ȷ j>b ЄoqQYeЄbeЄ) d=50 ;
14. PVC d=50 ;
15. PVC d=50 90i;
16. PVC d=50 45i;
17. PVC d=50 ;
18. PVC d=50 ;
19. - ;
20. d=51/3 ;
21. WAGER RV-1200;
22. / ˜ d=2000 H =2.10 , ¯ ;;
23. / ˜ d=1000 H =1.70 , ¯ ;
24. d=114 ( );
25. d=140 ( );
26. d=165 ( );
27. d=50 90i

(№)

. . .
. . .

:

:

-

,

. . . . . .

s.k.(# 01.13.01.022.194-01.13.01.022.198)

:

´

:

( )

:

( )

: , 2024

	-5	A3

Wis rgo lebs So ris hidrosaizo lacio masa l is mowyobis kvanZi

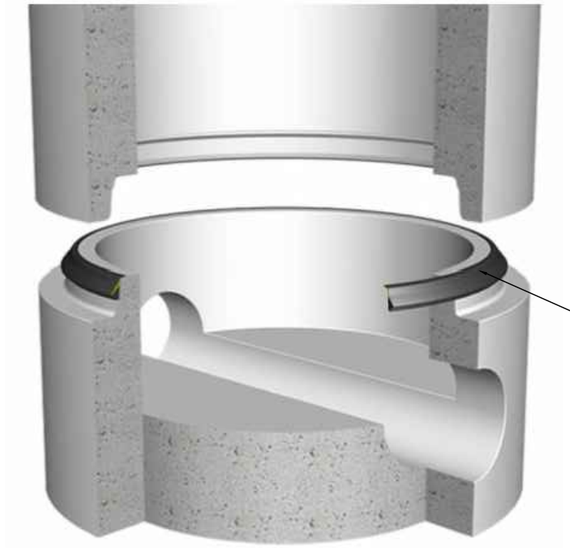

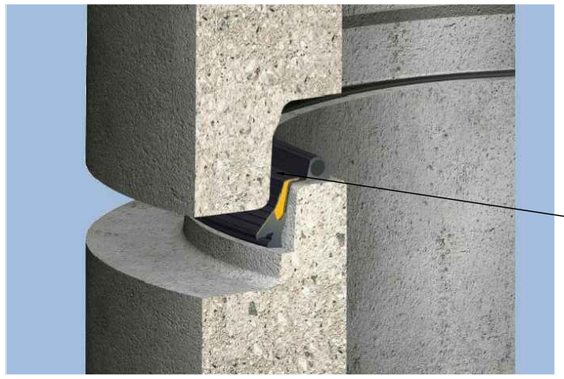

Tuj is xufi

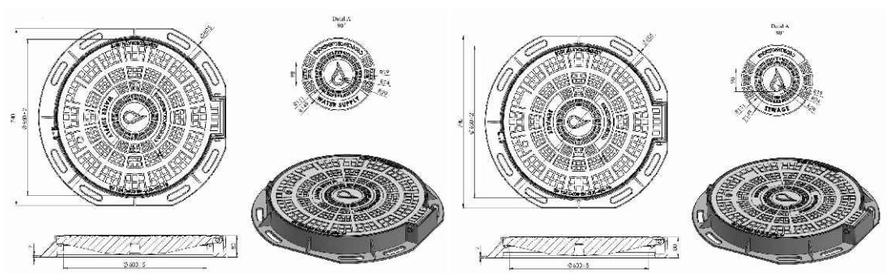

rkinabet onis standar tul i Wa

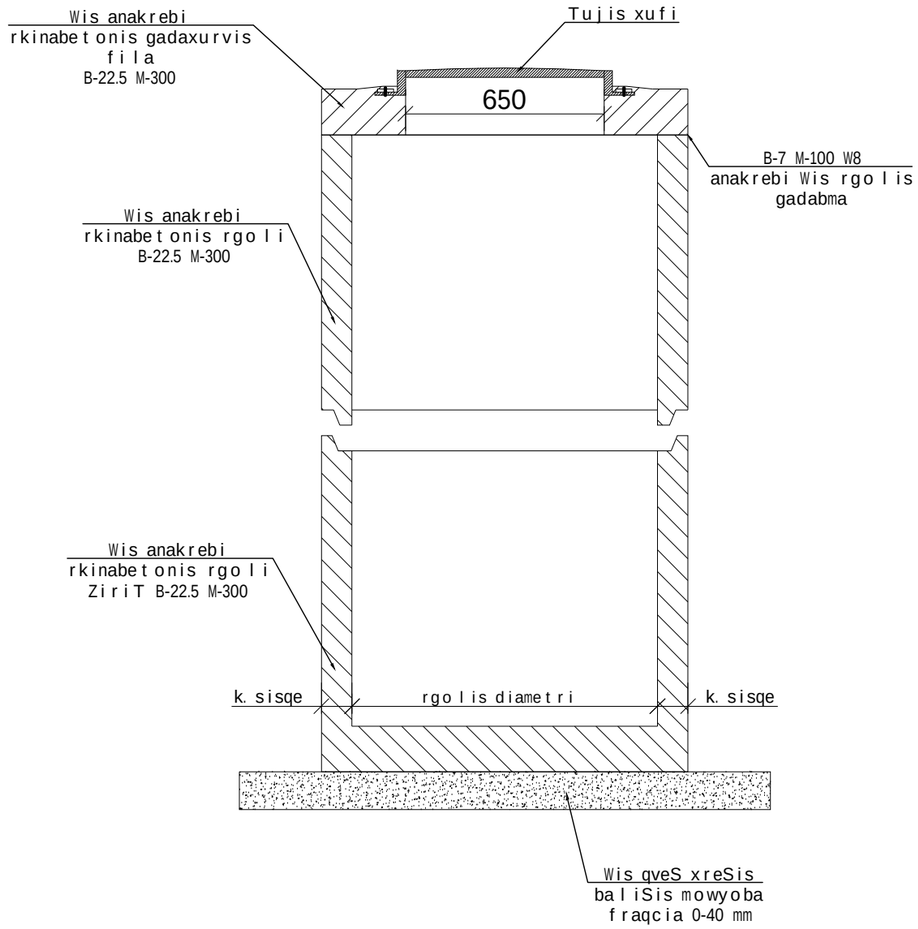

gwp

(№)

. . .
. . .

:

:

-
,

. . . . . .

s.k.(#01.13.01.022.194-01.13.01.022.198)

:

:

( )

:

( )

: , 2024

- :

	-6	A3

gamagrebis grZivi kveTi
m 1:50

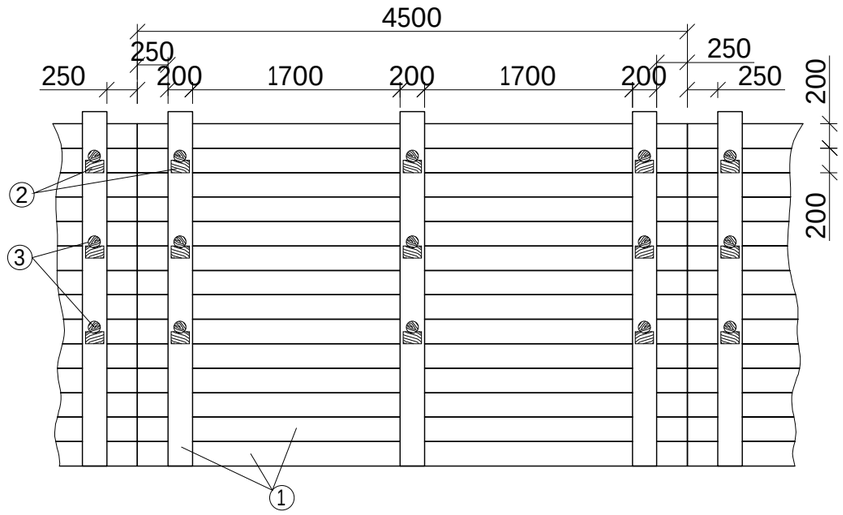

gamagrebis ganivi kveTi
1m 1:50

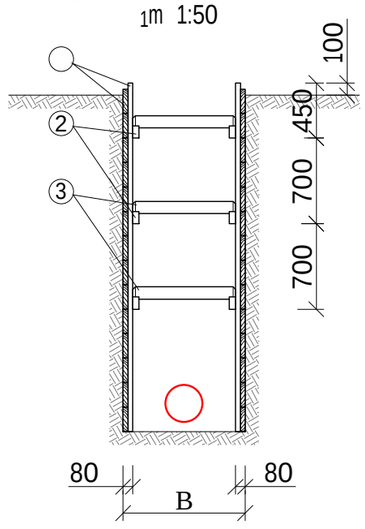

d e t a l e b i
m 1:10

1 - f i c r i s naWe r i

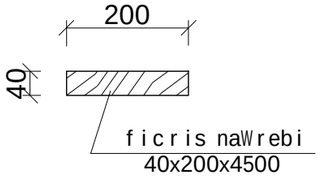

2 - gambr j e n i s say r d e n i

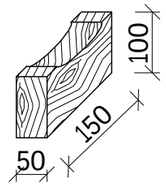

3 - gambr j e n i

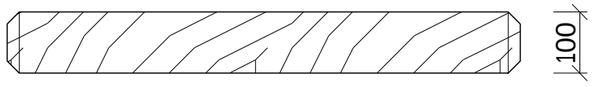

gamagrebis kvanZi inventaruli fariT









SeniSvna: qse l is CaRr maveba h ≥1.7 m-s SemTxvevaSi saWi r o a miwis Txri l is da Wis qvabu l is ked l ebis gamagreba.

(№)

. . .
. . .

:

:
- ,
. . . . . .
s.k.(# 01.13.01.022.194-01.13.01.022.198)

:

:
( )

:
( )

: , 2024

-7 A3