sardafis sarTulis gegma

m 1:150

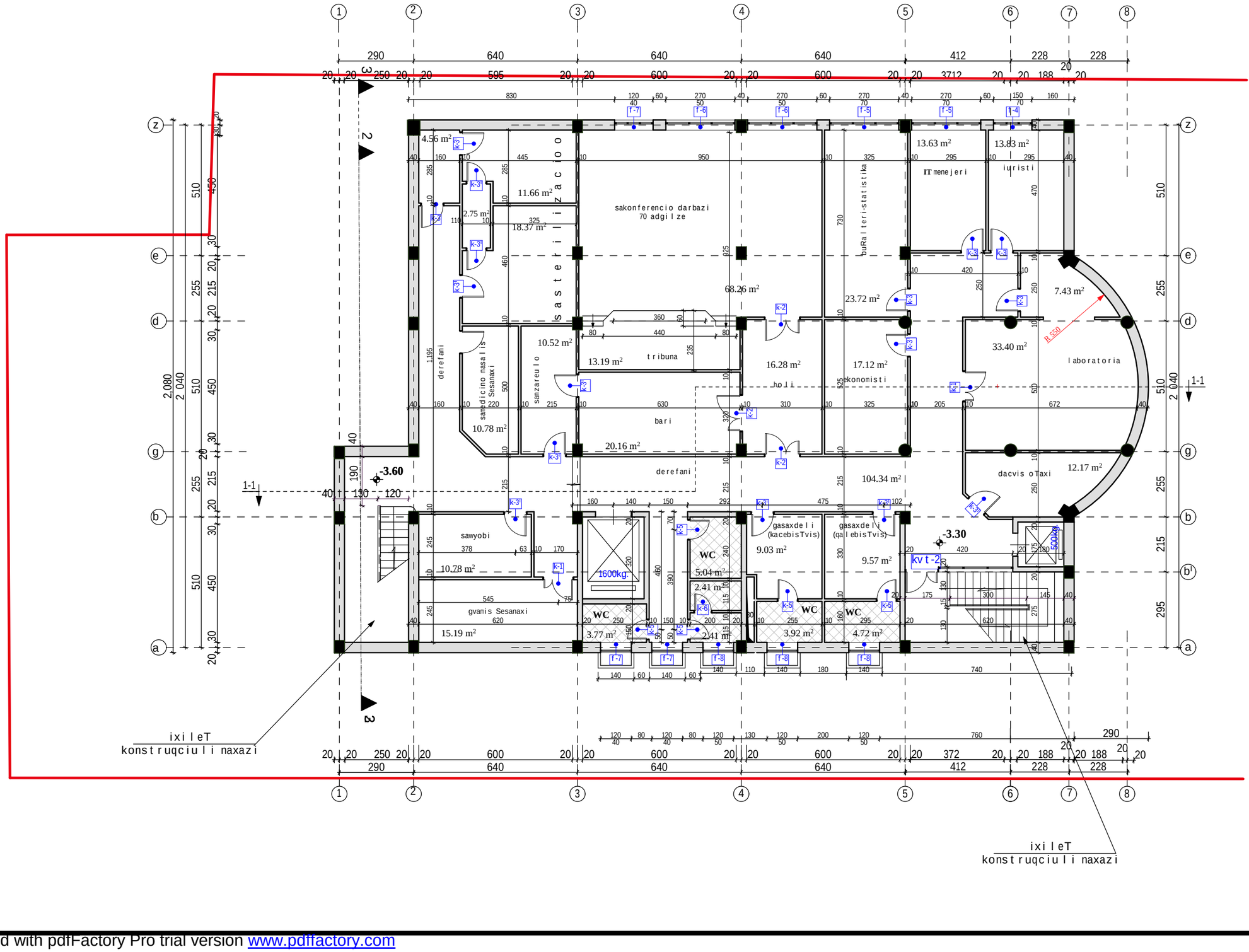

formati	A-3
Tbilisi 2013 w.	dakveTis # 6/13

eqsplikacia:

pirobiTi aRniSvnebi:

SeniSvna:

proeqtis saxelwodeba

q. TbilisSi, winandlis q. #9-Si md.
saavadmyofos
proeqtis koreqtireba

Sps "axalii saqaqaqmSenproeqti"
al. yazbegis gamz. #2/
pekinis q. #34
Phone: (995 32) 37 52 26

Tanamdeboba	gvari	xelmowera
ganyr. ufr.	v. cuxiSvili	
mTspecial.	n.gvasalia	
avtori	T. mosiaSvili	
	g. avaliSvili	

dasaxeleba	masStabi
sardafis sarTulis gegma	1:150

stadia	furceli	furclebi
mp	a-3	23

PDF created with pdfFactory Pro trial version www.pdffactory.com

I sar Tu l is gegma

m 1:150

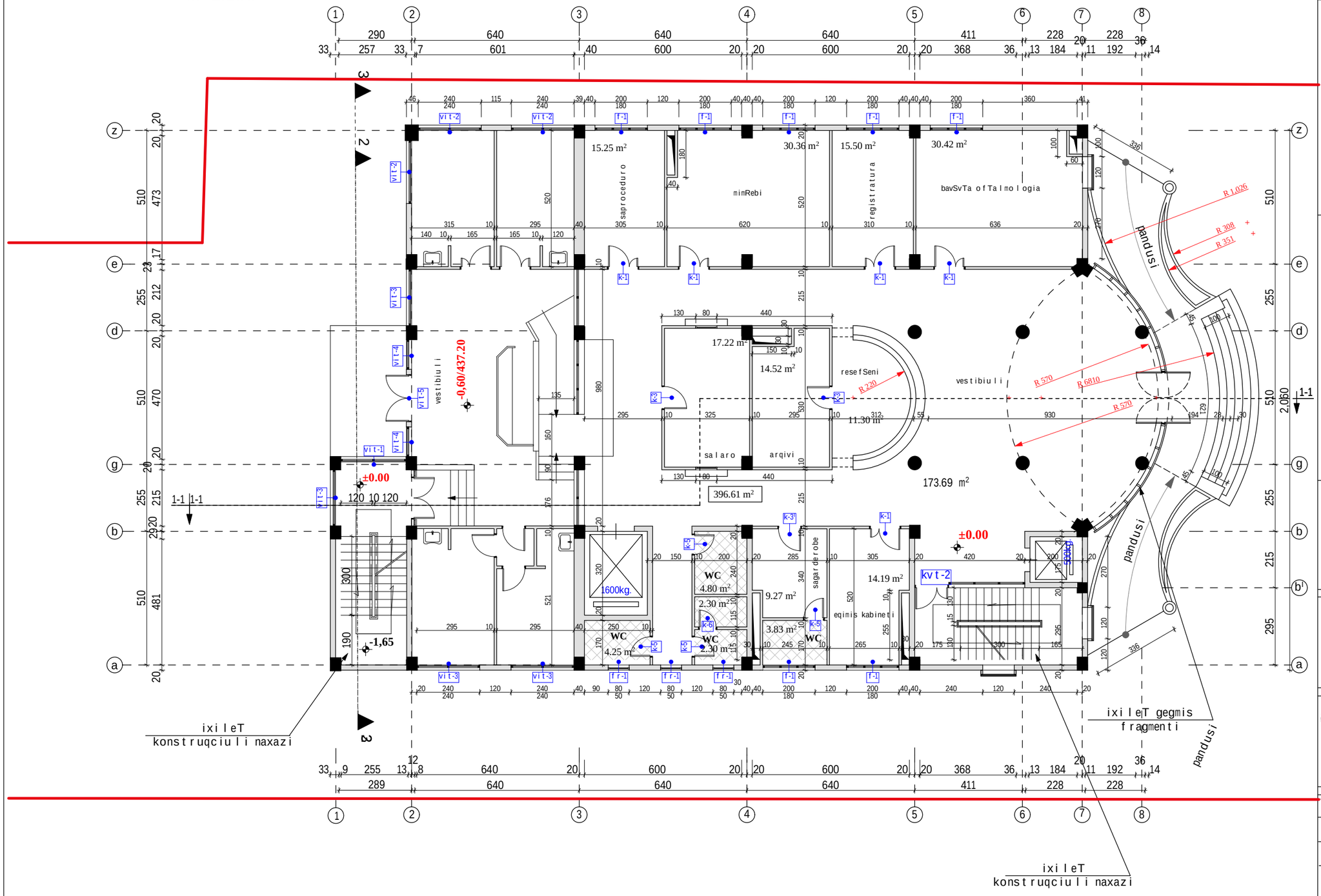

formati	A-3
Tbilisi 2013 w.	*dakveTis #* 6/13

eqsplikacia:

pirobiTi aRniSvnebi:

SeniSvna:

proeqtis saxelwodeba

q. TbilisSi, winandlis q. #9-Si md.
saavadmyofos
proeqtis koreqtireba

Sps "axali saqaqaqmSenproeqti"

al. yazbegis gamz. #2/
pekinis q. #34
Phone: (995 32) 37 52 26

Tanamdeboba	gvari	xelmowera
gany. ufr.	v. cuxiSvili	
mT.specialist.	n.gvasalia	
avtori	T. mosiaSvili	
	g. avaliSvili	

dasaxeleba	*masStabi*
IsarTulis gegma	1:150

stadia	*furceli*	*furclebi*
mp		

PDF created with pdfFactory Pro trial version www.pdffactory.com

formati A-3	dakveTis #
Tbilisi 2013 w.	6/13

eqsplikacia:

pirobiTi aRniSvnebi:

SeniSvna:

II sarTuli gegma

m 1:150

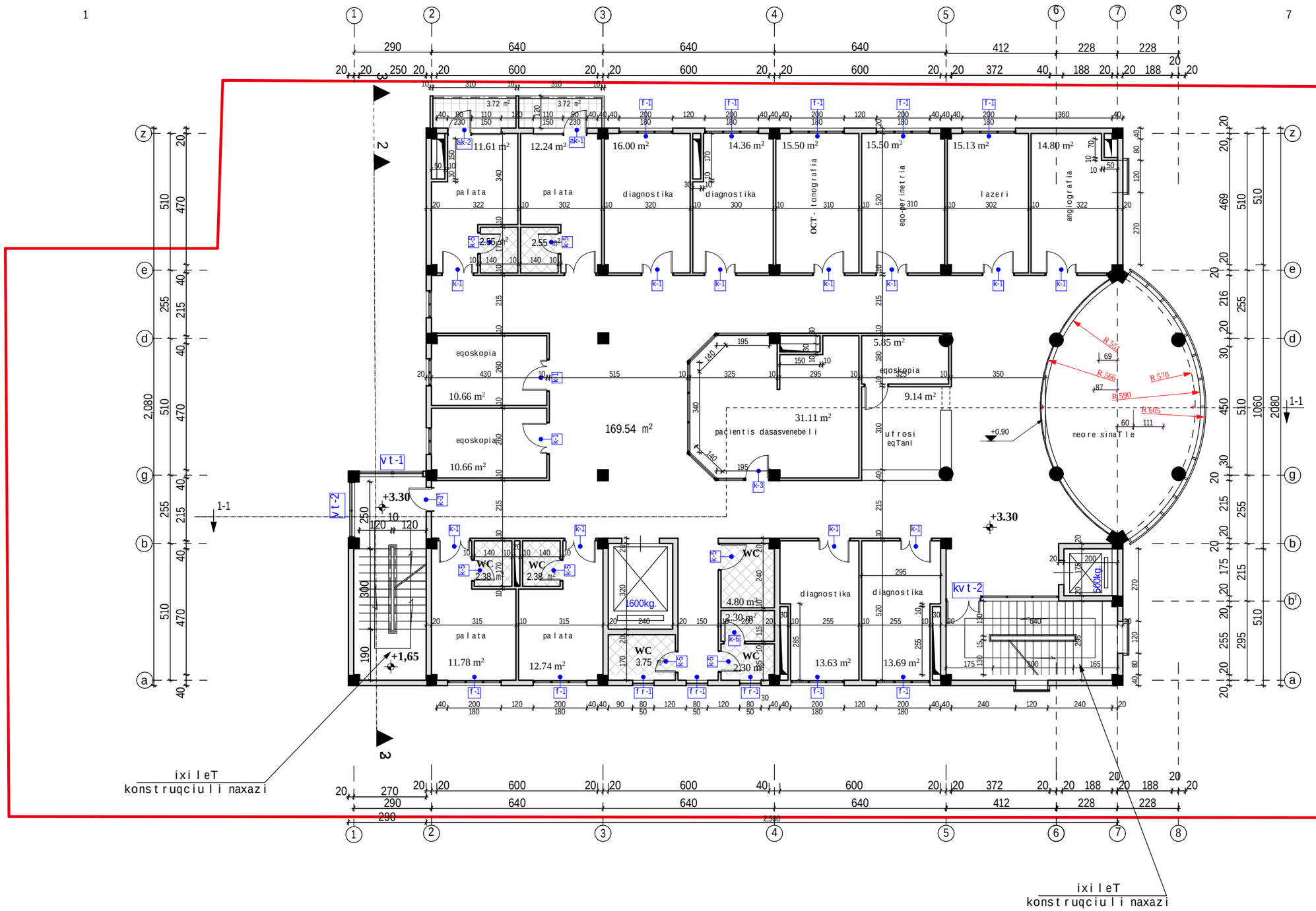

proeqtis saxelwodeba
q. TbilisSi, winandlis q. #9-Si md. saavadmyofos proeqtis koreqtireba

Sps "axali saqqalaqmSenproeqti"

al. yazbegis gamz. #2/ pekinis q. #34

Phone: (995 32) 37 52 26

Tanamdeboba	gvari	xelmowera
gany. ufr.	v. cuxiSvili	
mT.specialr.	n.gvasalia	
avtori	T. mosiaSvili	
	g. avaliSvili	

dasaxeleba	masStabi
II sarTulis gegma	1:150

stadia	furceli	furclebi
mp	a-5	23

PDF created with pdfFactory Pro trial version www.pdffactory.com

III sarTuli gegma

m 1:150

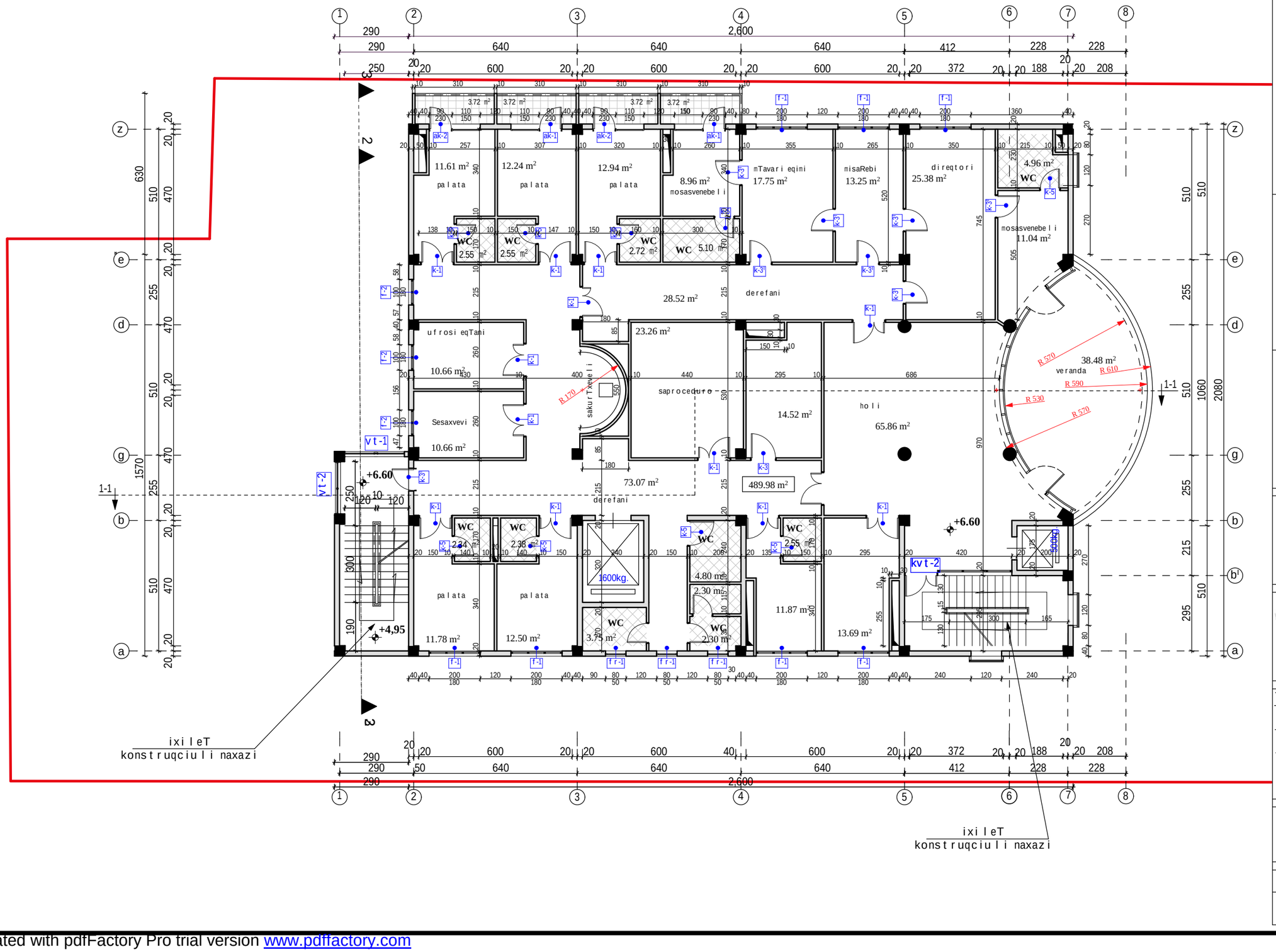

formati	A-3
Tbilisi 2013 w.	dakveTis # 6/13

eqsplikacia:

pirobiTi aRniSvnebi:

SeniSvna:

proeqtis saxelwodeba

q. TbilisSi, winandlis q. #9-Si md saavadmyofos proeqtis koreqtireba

Sps "axali saqqalaqmSenproeqti"

al. yazbegis gamz. #2/ pekinis q. #34

Phone: (995 32) 37 52 26

Tanamdeboba	gvari	xelmowera
gany. ufr.	v. cuxiSvili	
mTspecial.	n.gvasalia	
avtori	T. mosiaSvili	
	g. avaliSvili	

dasaxeleba	masStabi
III sarTulis gegma	1:150

stadia	furceli	furclebi
mp	a-6	23

PDF created with pdfFactory Pro trial version www.pdffactory.com

IV sarTulis gegma

m 1:150

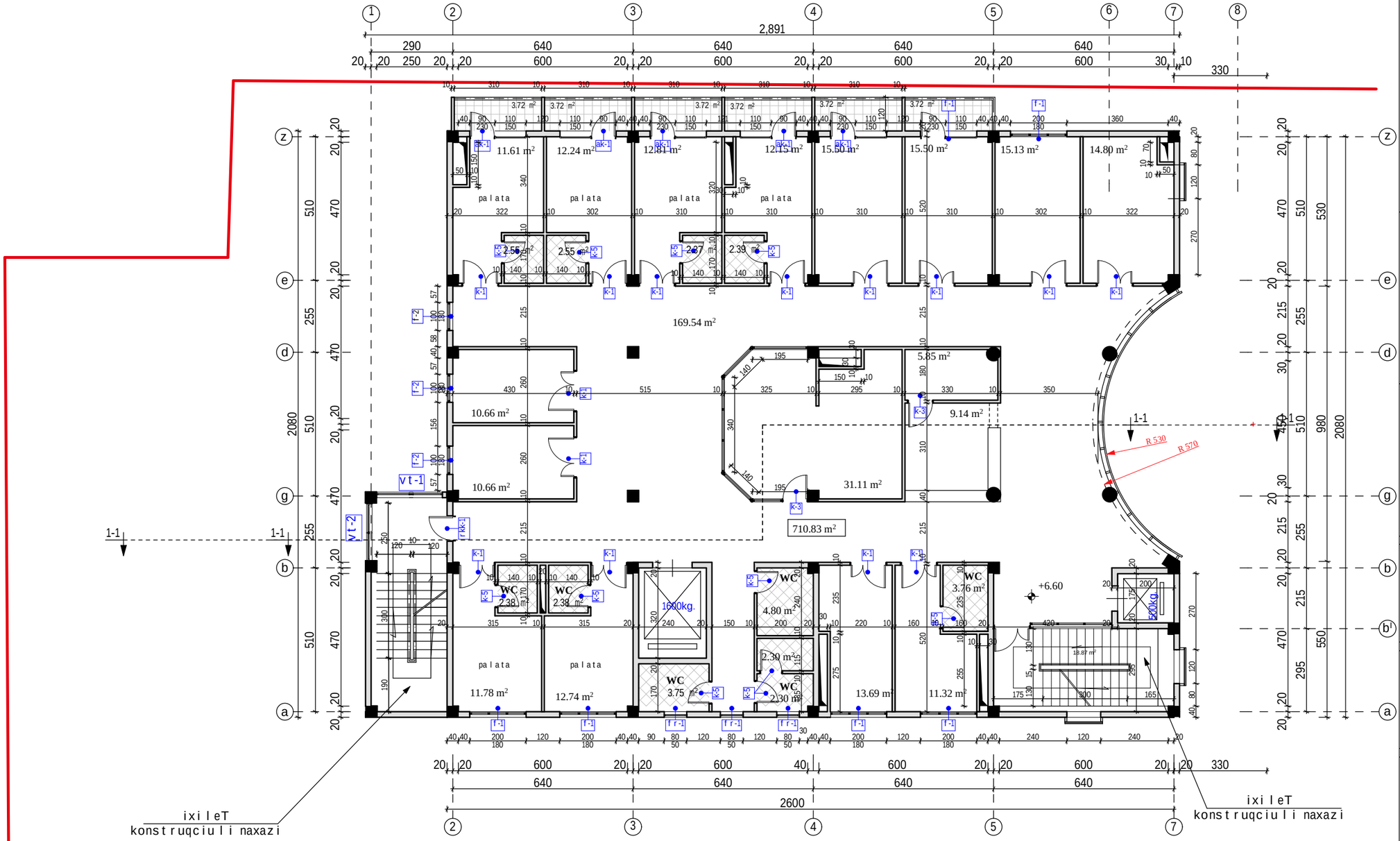

formati	A-3	dakveTis #
Tbilisi 2013 w.		6/13

eqsplikacia:

pirobiTi aRniSvnebi:

SeniSvna:

proeqtis saxelwodeba

q. TbilisSi, winandlis q. #9-Si md
saavadmyofos
proeqtis koreqtireba

Sps "axali saqqalaqmSenproeqti"

al. yazbegis gamz. #2 /
pekinis q. #34
Phone: (995 32) 37 52 26

Tanamdeboba	gvari	xelmowera
gany. ufr.	v. cuxiSvili	
mT.special.	n.gvasalia	
avtori	T. mosiaSvili	
	g. avaliSvili	

dasaxeleba	masStabi
IV sarTulis gegma	1:150

stadia	furceli	furclebi
mp	a-7	24

PDF created with pdfFactory Pro trial version www.pdffactory.com

V sarTulis gegma

m 1:150

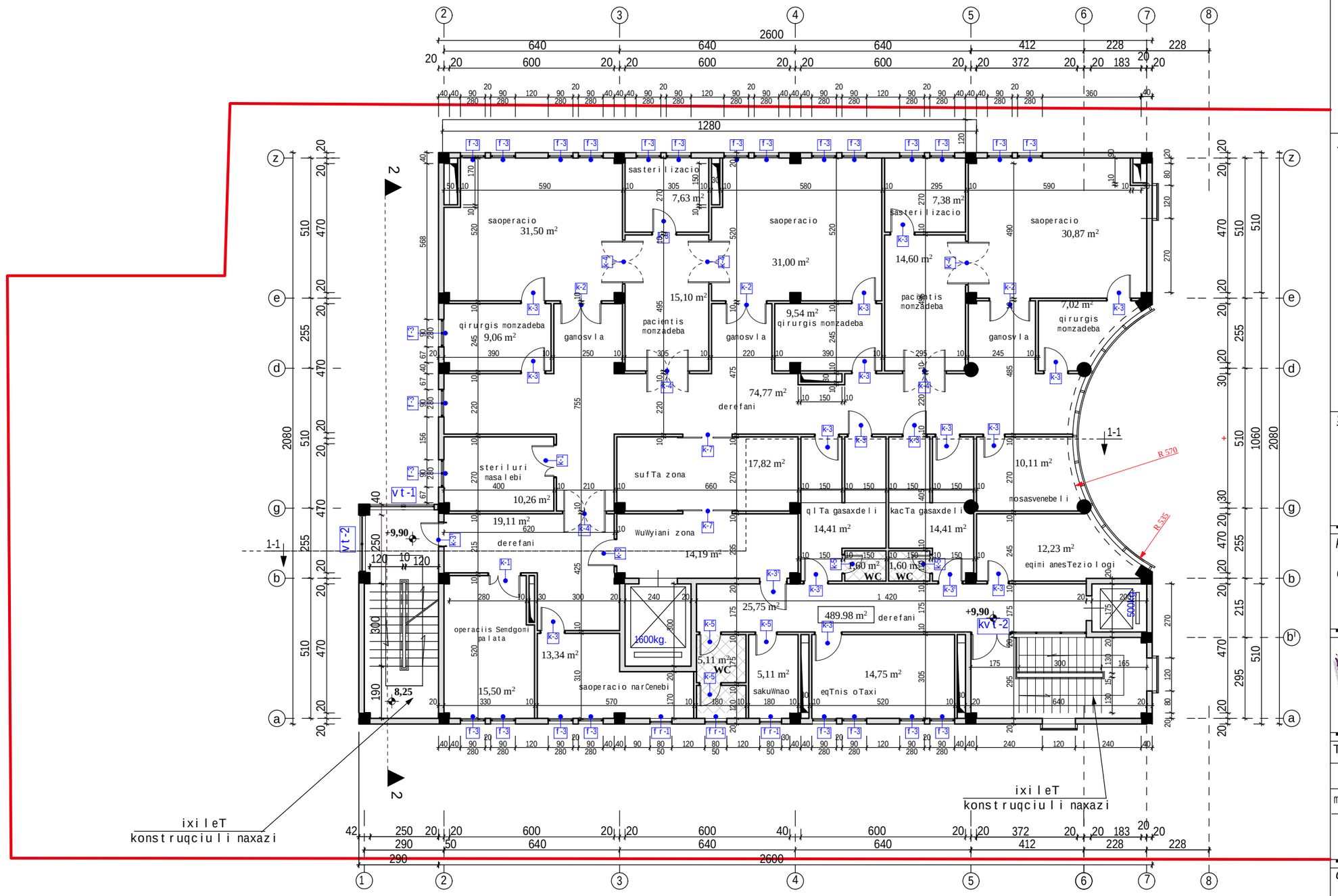

formati	A-3	dakveTis #
Tbilisi 2013 w.		6/13

eqsplikacia:

pirobiTi aRniSvnebi:

SeniSvna:

proeqtis saxelwodeba

q. TbilisSi, winandlis q. #9-Si md.
saavadmyofos
proeqtis koreqtireba

Sps "axali saqqalaqmSenproeqti"
al. yazbegis gamz. #2 /
pekinis q. #34
Phone: (995 32) 37 52 26

Tanamdeboba	gvari	xelmowera
gany. ufr.	v. cuxiSvili	
mT.special.	n.gvasalia	
avtori	T. mosiaSvili	
	g. avaliSvili	

dasaxeleba	masStabi
V sarTulis gegma	1:150

stadia	furceli	furclebi
mp	a-7	23

teqnikuri sarTuli gegma

m 1:150

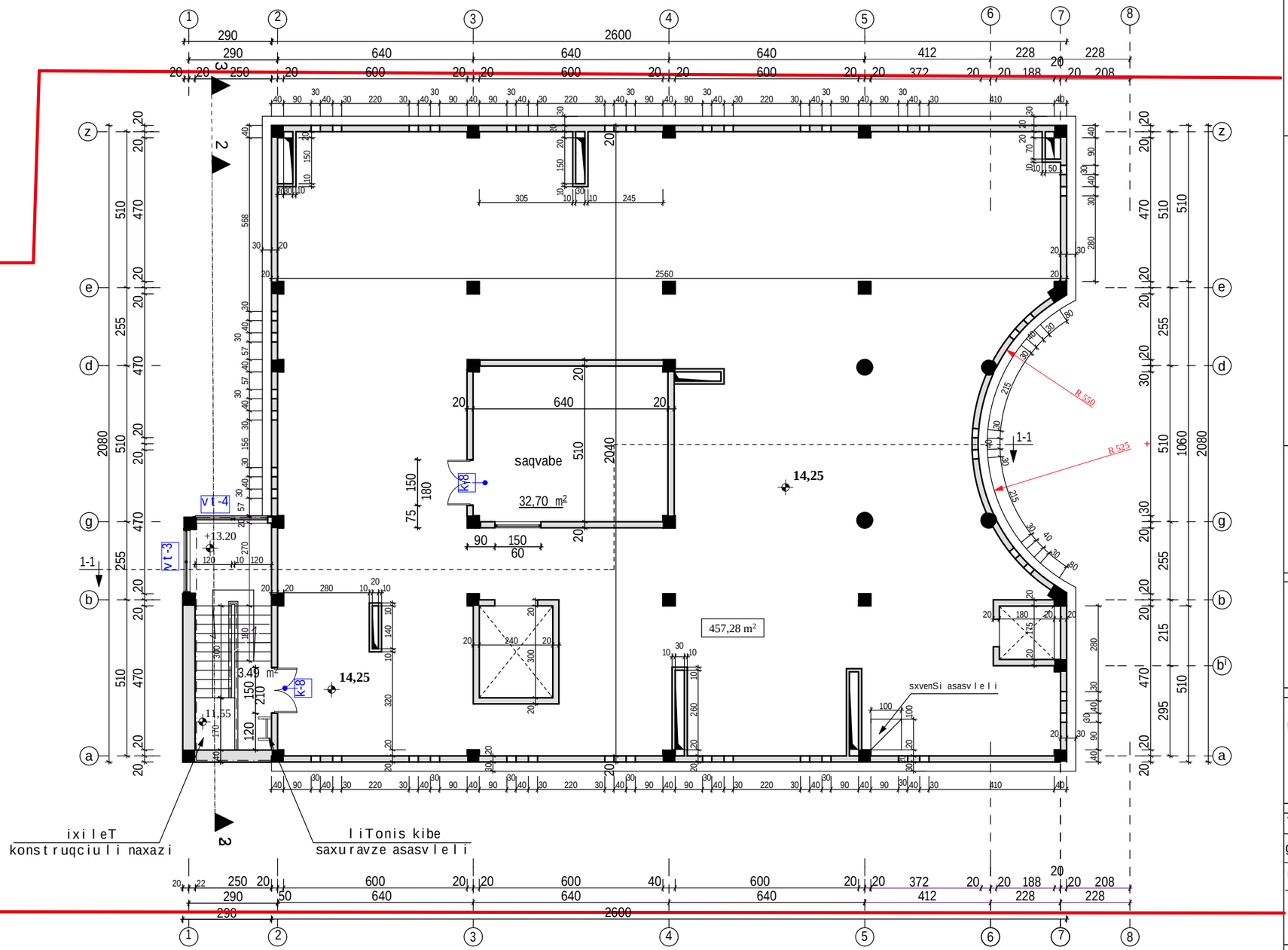

formati	A-3
Tbilisi 2013 w.	
dakveTis #	6/13

egsplikacia:

pirobiTi aRniSvnebi:

SeniSvna:

proeqtis saxelwodeba

q. TbilisSi, winandlis q. #9-Si md.
saavadmyofos
proeqtis koreqtireba

Sps "axali saqqalaqmSenproeqti"
al. yazbegis gamz. #2/
pekinis q. #34
Phone: (995 32) 37 52 26

Tanamdeboba	gvari	xelmowera
gany. ufr.	v. cuxiSvili	
mTspecial.	n.gvasalia	
avtori	T. mosiaSvili	
	g. avaliSvili	

dasaxeleba	masStabi
teqnikuri sarTulis gegma	1:150

stadia	furceli	furclebi
mp	a-8	23

PDF created with pdfFactory Pro trial version www.pdffactory.com

saxuravis gegma

m 1:150

saxuravis safarvelis mowyobis detali

damcavi fena - hidroizoli 2 fena, daigos jvaredinad
hidroizolacia - 2 fena (degusa), neilonis badeze, daigos jvaredinad
cementis armirebuli moWimva - 3 sm.
pemzis nayari - cvalebadi
gadaxurvis r/b fila - 16 sm.

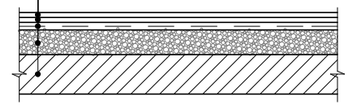

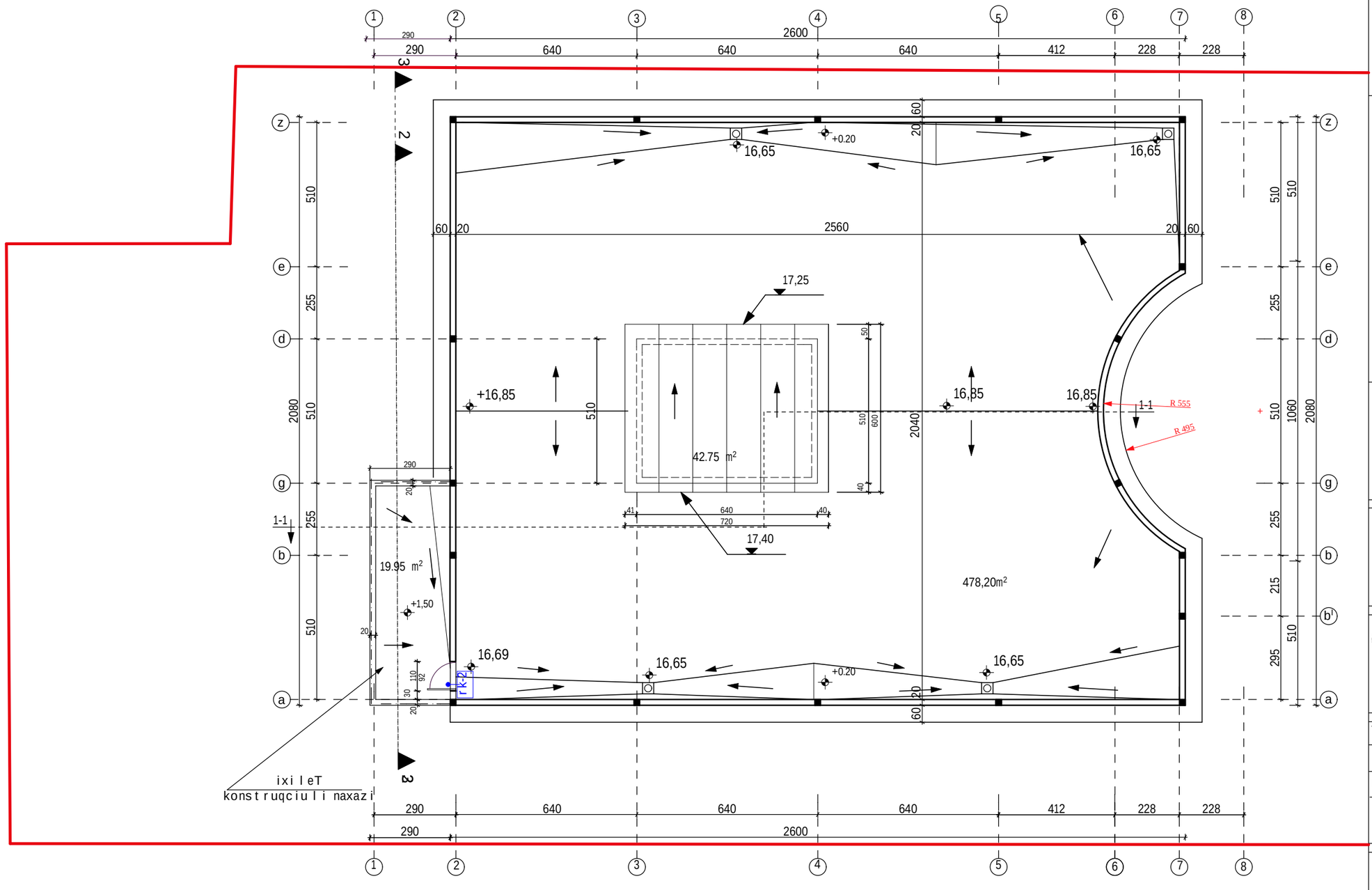

formati m 1:10	A-3
Tbilisi 2013 w.	dakveTis # 6/13

eqsplikacia:

pirobiTi aRniSvnebi:

SeniSvna:

proeqtis saxelwodeba

q. TbilisSi, winandlis q. #9-Si md. saavadmyofos proeqtis koreqtireba

Sps "axali saqqalaqmSenproeqti"
al. yazbegis gamz. #2/ pekinis q. #34
Phone: (995 32) 37 52 26

Tanamdeboba	gvari	xelmowera
ganyofr.	v. cuxiSvili	
mTspecial.	n.gvasalia	
avtori	T. mosiaSvili	
	g. avaliSvili	

dasaxeleba	masStabi
saxuravis gegma	1:150

stadia	furceli	furclebi
mp	a-9	23

PDF created with pdfFactory Pro trial version www.pdffactory.com

formati A-3	dakveTis #
Tbilisi 2013 w.	6/13

egsplikacia:

pirobiTi aRniSvnebi:

SeniSvna:

proeqtis saxelwodeba

q. TbilisSi, winandlis q. #9-Si md.
saavadmyofos
proeqtis koreqtireba

Sps "axali saqqalaqmSenproeqti"

al. yazbegis gamz. #2/
pekinis q. #34
Phone: (995 32) 37 52 26

Tanamdeboba	gvari	xelmowera
gany. ufr.	v. cuxiSvili	
mT.specialist.	n.gvasalia	
avtori	T. mosiaSvili	
	g. avaliSvili	

dasaxeleba	masStabi
damxmare nageboba	

stadia	furceli	furclebi
mp		

damxmare nagebobis gegma
m 1:100

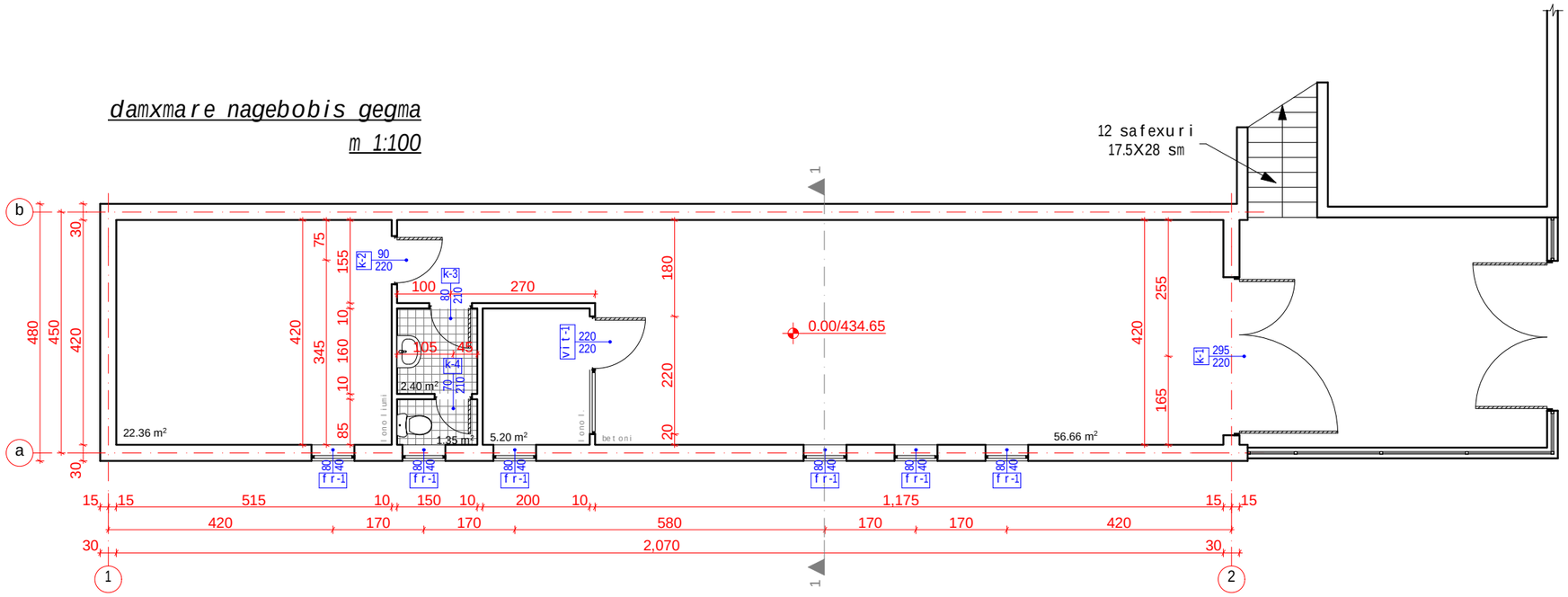

damxmare nagebobis saxuravis gegma
m 1:100

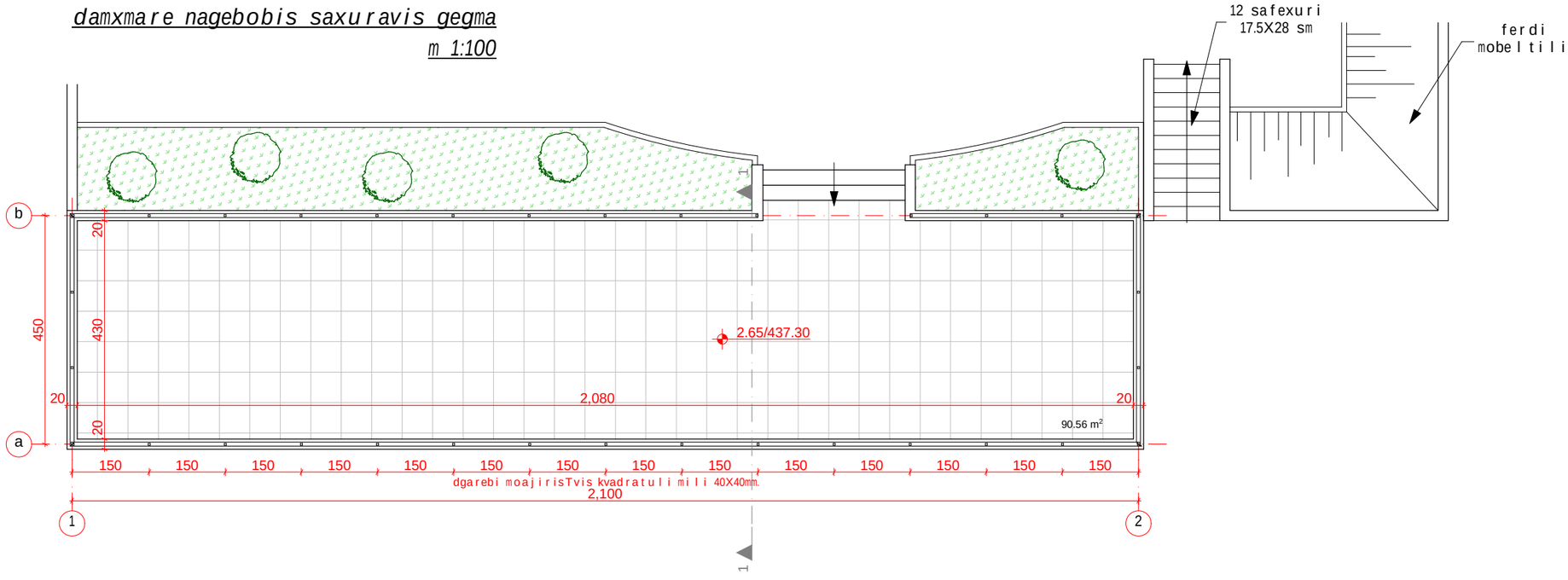

PDF created with pdfFactory Pro trial version www.pdffactory.com

fasadi 1-2 RerZebSi

m 1:100

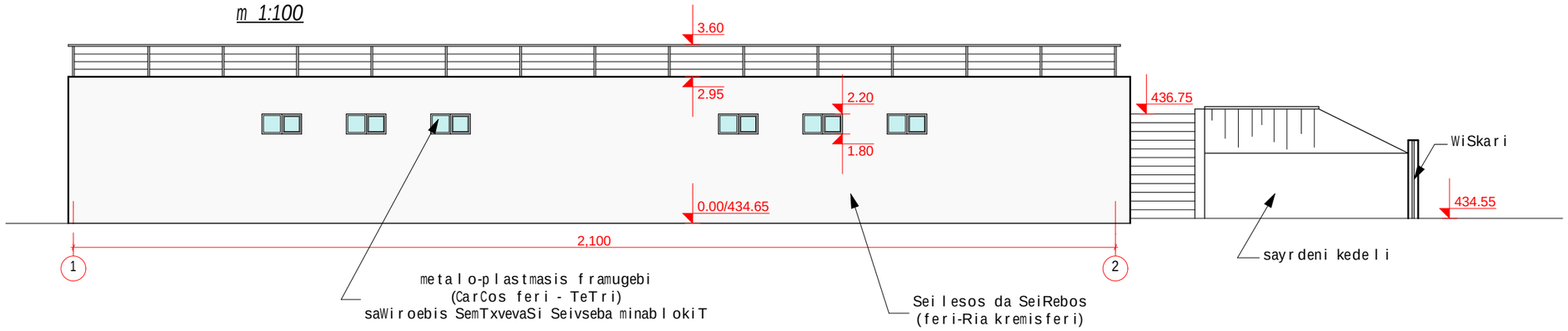

fasadi a-b RerZebSi

m 1:100

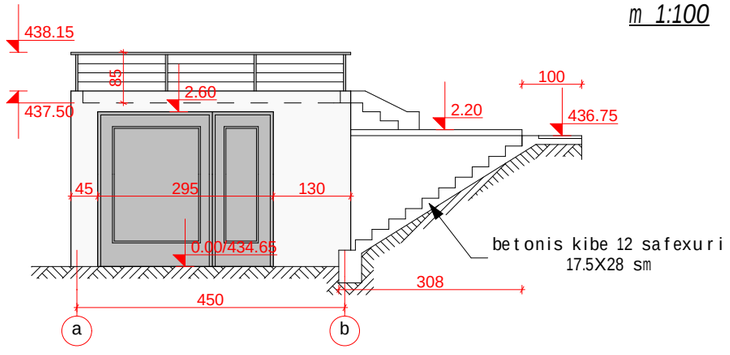

Wrili 1-1

m 1:100

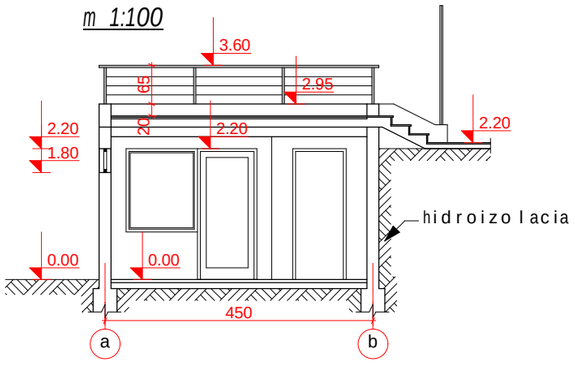

SeniSvna:
saZirkvel is mowyobisTvis ix. konstruqciul i naxazebi

formati A-3		dakveTis # 6/13
Tbilisi 2013 w.		

ეqsplikacia:

pirobiTi aRniSvnebi:

SeniSvna:

proeqtis saxelwodeba

q. TbilisSi, winandlis q. #9-Si md.
saavadmyofos
proeqtis koreqtireba

Sps "axali saqqalaqmSenproeqti"
al. yazbegis gamz. #2 /
pekinis q. #34
Phone: (995 32) 37 52 26

Tanamdeboba	gvari	xelmowera
gany. ufr.	v. cuxiSvili	
mT.specialist.	n.gvasalia	
avtori	T. mosiaSvili	
	g. avaliSvili	

dasaxeleba	masStabi
damxmare nageboba	

stadia	furceli	furclebi
mp		

PDF created with pdfFactory Pro trial version www.pdffactory.com