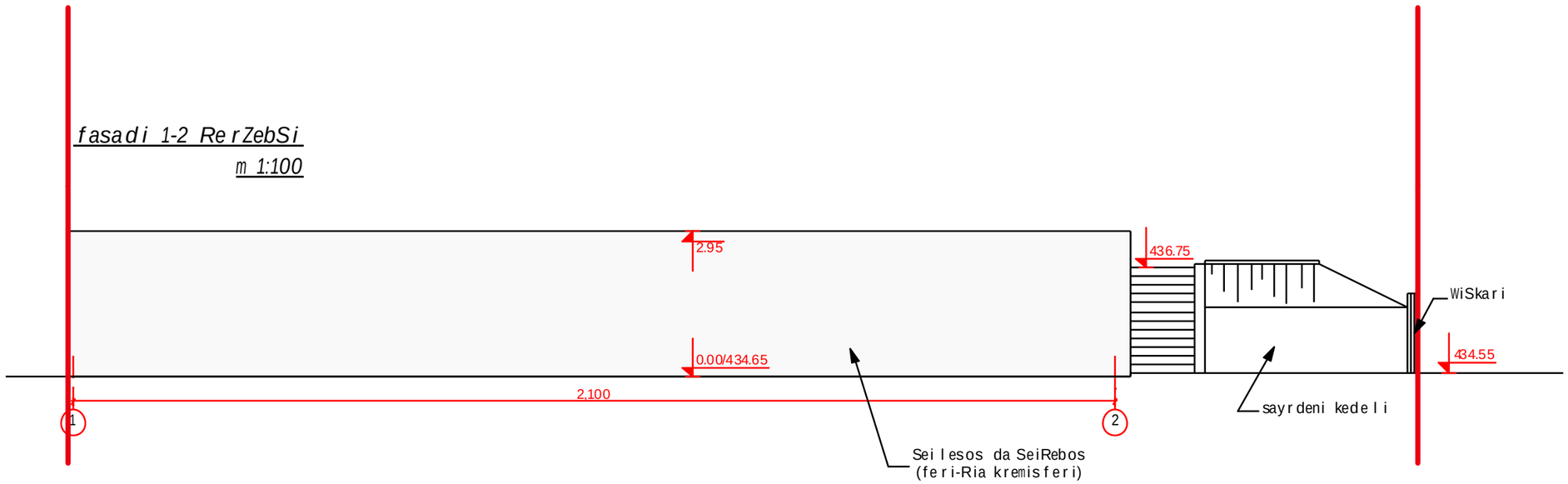

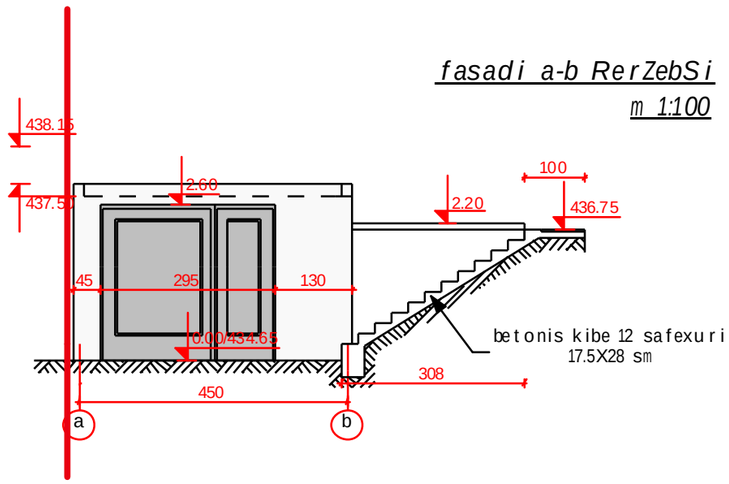

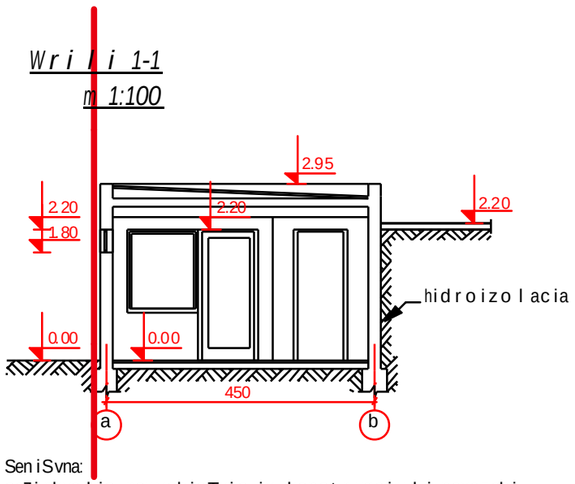

SeniSvna:
saZirkvelis mowyobisTvis ix. konstruqciuli naxazebi

formati A-3	dakveTis # 6/13
Tbilisi 2013 w.	

eqsplikacia:

pirobiTi aRniSvnebi:

SeniSvna:

proeqtis saxelwodeba

q. TbilisSi, winandlis q. #9-Si md.
saavadmyofos
proeqtis koreqtireba

Sps "axali saqqalaqmSenproeqti"
al. yazbegis gamz. #2 /
pekinis q. #34
Phone: (995 32) 37 52 26

Tanamdeboba	gvari	xelmowera
gany. ufr.	v. cuxiSvili	
mT.special.	n.gvasalia	
avtori	T. mosiaSvili	
	g. avaliSvili	

dasaxeleba	masStabi
damxmare nageboba	

stadia	furceli	furclebi
mp		

fasadi 7-1 RerZebSi

m 1:150

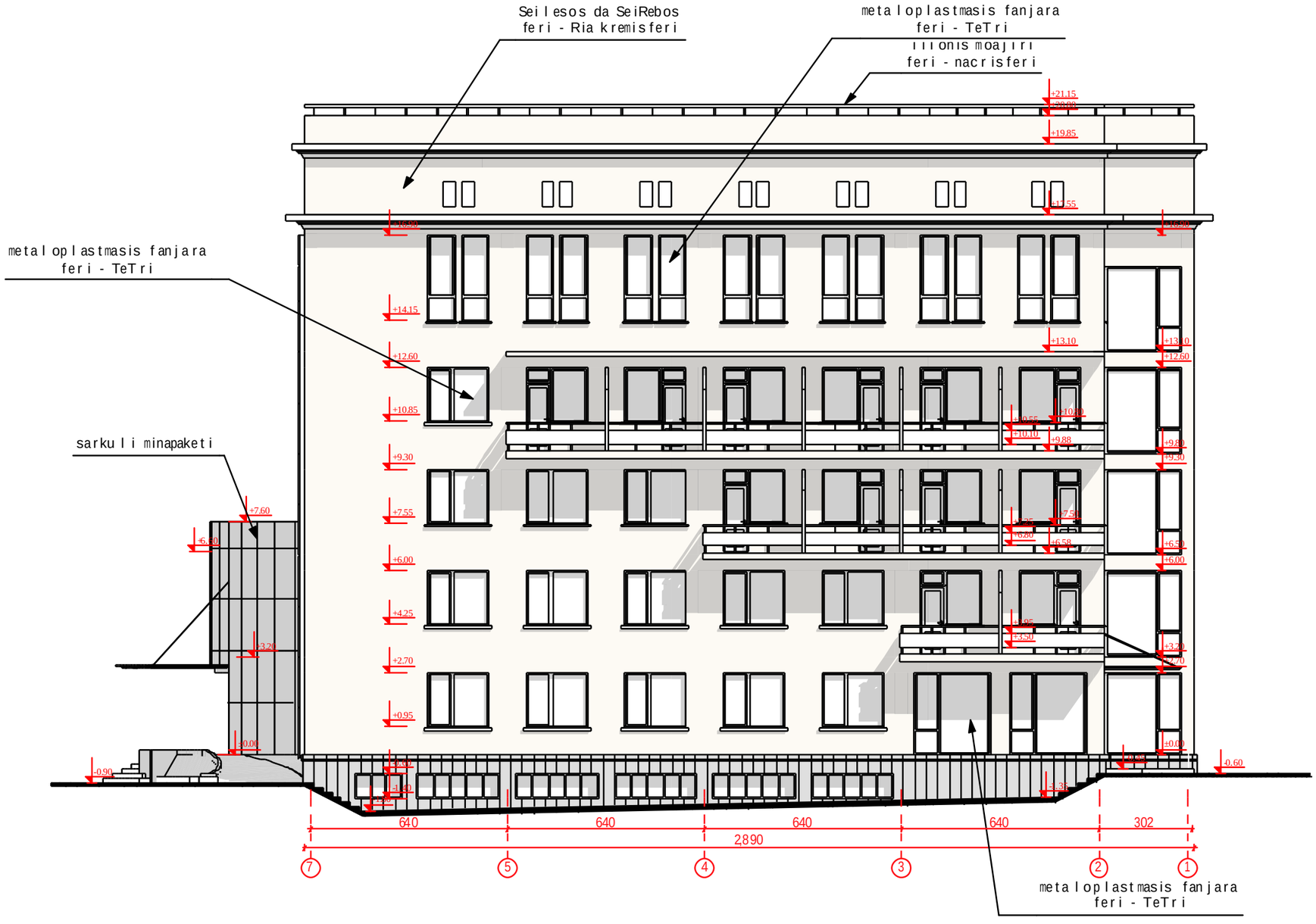

wiTeli xazi

formati	A-3
Tbilisi 2013 w.	
dakveTis #	6/13

egsplikacia:

pirobiTi aRniSvnebi:

SeniSvna:

proeqtis saxelwodeba

q. TbilisSi, winandlisq. #9-Si md.
saavadmyofos
proeqtis koreqtireba

Sps "axali saqqalaqmSenproeqti"
al. yazbegis gamz. #2/
pekinis q. #34
Phone: (995 32) 37 52 26

Tanamdeboba	gvari	xelmowera
ganyufr.	v. cuxiSvili	
avtori	T. mosiaSvili	
	g. avaliSvili	

dasaxeleba	masStabi
fasadi 7-1 RerZebSi	1:150

stadia	furceli	furclebi
mp		

fasadi a-z RerZebSi

m 1:150

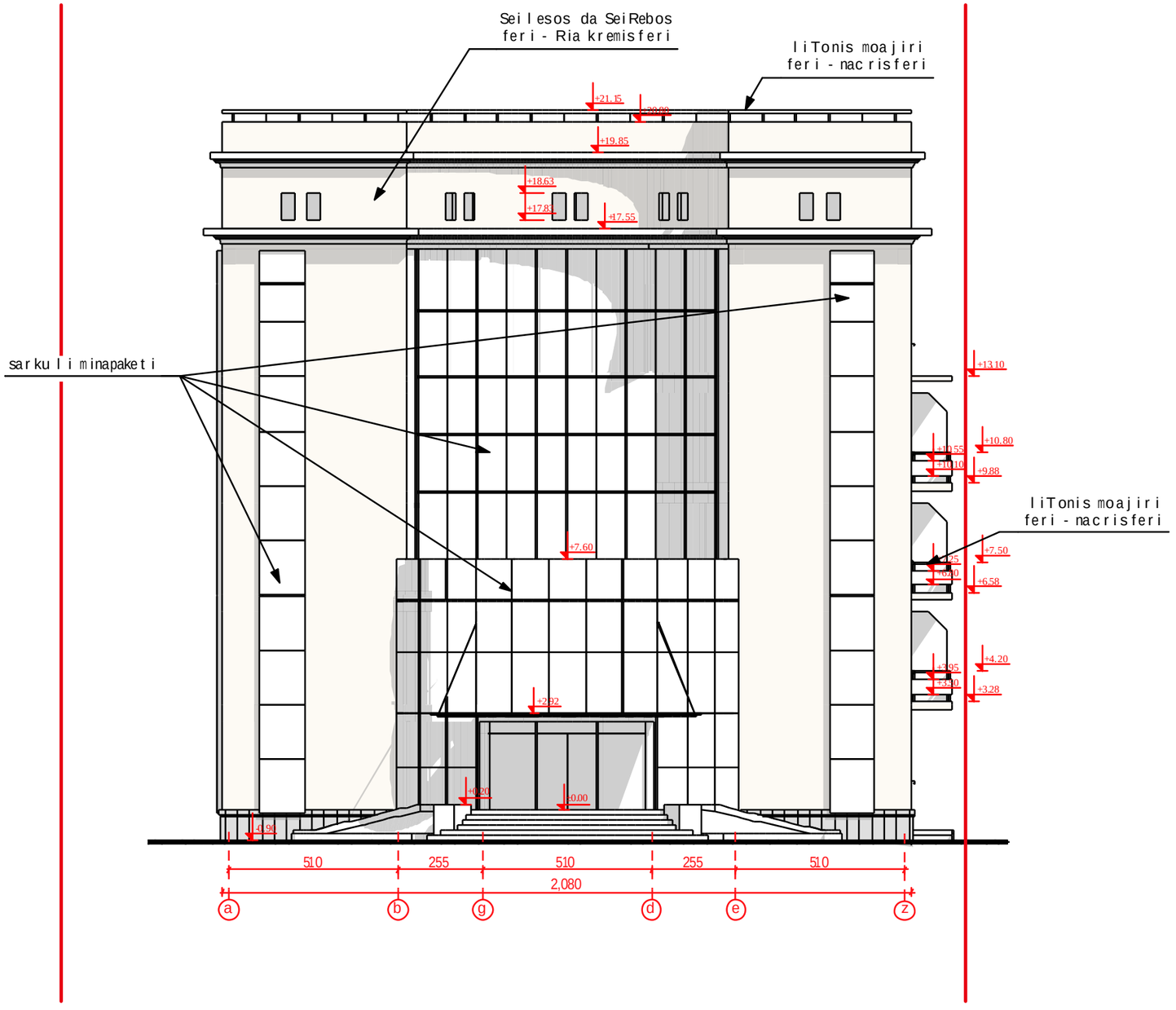

formati	A-3	dakveTis #

eqsplikacia:

pirobiTi aRniSvnebi:

SeniSvna:

proeqtis saxelwodeba

Sps "axali saqqalaqmSenproeqti"
al. yazbegis gamz. #2 / pekinis q. #34
Phone: (995 32) 37 52 26

Tanamdeboba	gvari	xelmowera
gany. ufr.	v. cuxiSvili	
avtori	T. mosiaSvili	
	g. avaliSvili	

dasaxeleba	masStabi
fasadi a-z RerZebSi	1:150

stadia	furceli	furclebi
mp		

fasadi z-a RerZebSi

m 1:150

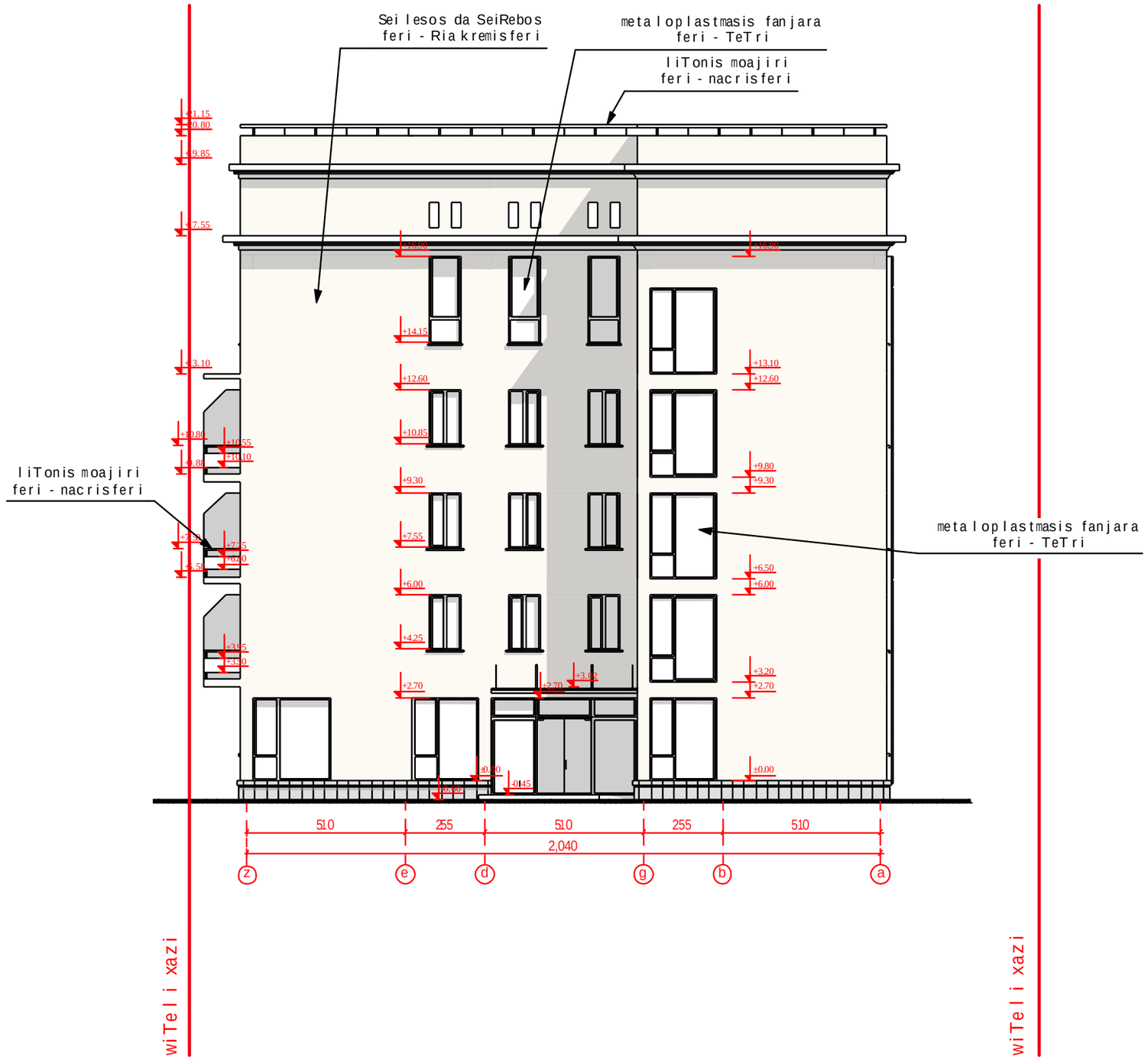

formati	A-3
Tbilisi 2013 w.	*dakveTis #* 6/13

egsplikacia:

pirobiTi aRniSvnebi:

SeniSvna:

proeqtis saxelwodeba

q. TbilisSi, winandlisq. #9-Si md. saavadmyofos proeqtis koreqtireba

Sps "axali saqmaoqSenproeqti"

al. yazbegis gamz. #2/

pekinis q. #34

Phone: (995 32) 37 52 26

Tanamdeboba	gvari	xelmowera
ganyufr.	v. cuxiSvili	
avtori	T. mosiaSvili	
	g. avaliSvili	

dasaxeleba	*masStabi*
fasadi z-a RerZebSi	1:150

stadia	*furceli*	*furclebi*
mp		23

fasadi 1-7 RerZebSi

m 1:150



formati A-3

Tbilisi 2013 w.

dakveTis # 6/13

egsplikacia:

pirobiTi aRniSvnebi:

SeniSvna:

proeqtis saxelwodeba

q. TbilisSi, winandlisq. #9-Si md. saavadmyofos proeqtis koreqtireba

Sps "axali saqaladqmSenproeqti"

al. yazbegis gamz. #2/ pekinisq. #34

Phone: (995 32) 37 52 26

Tanamdeboba	gvari	xelmowera
ganyufr.	v. cuxiSvili	
avtori	T. mosiaSvili	
	g. avaliSvili	

dasaxeleba	masStabi
fasadi 1-7 RerZebSi	1:150

stadia	furceli	furclebi
mp		