fasadi Rer ZebSi "2-1"
(arsebuli)

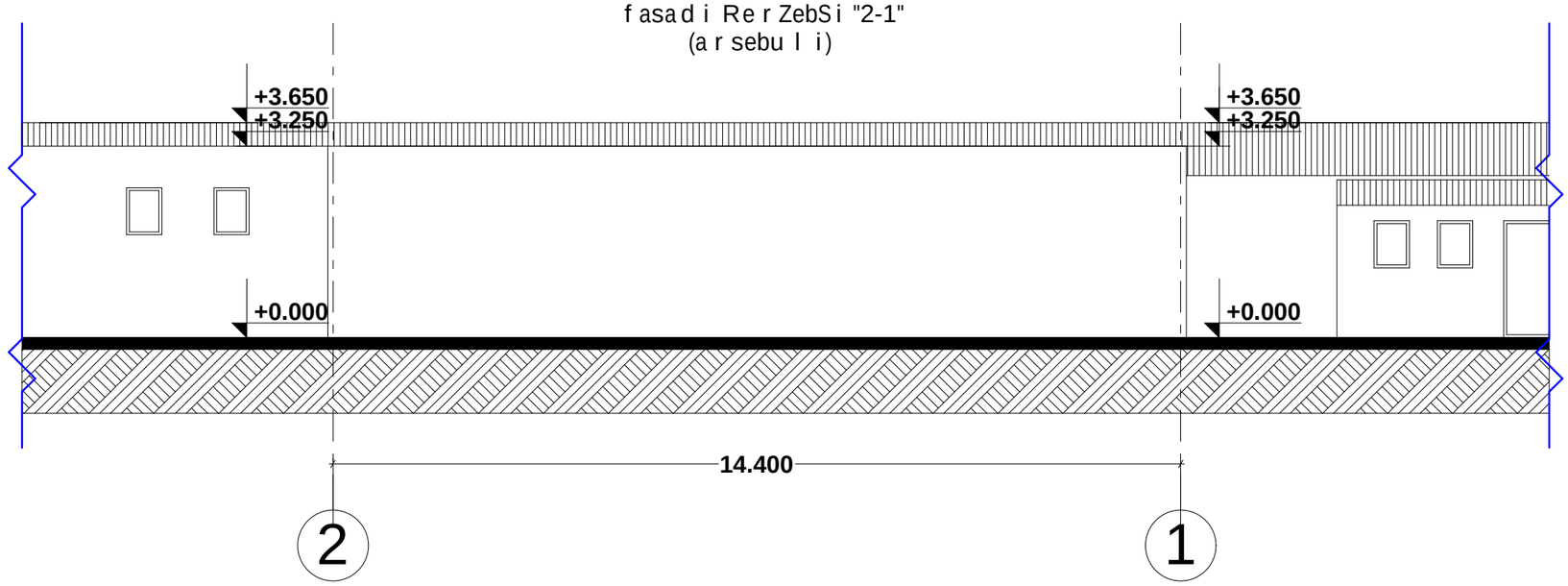

fasadi Rer ZebSi "2-1"
(saproeqto)

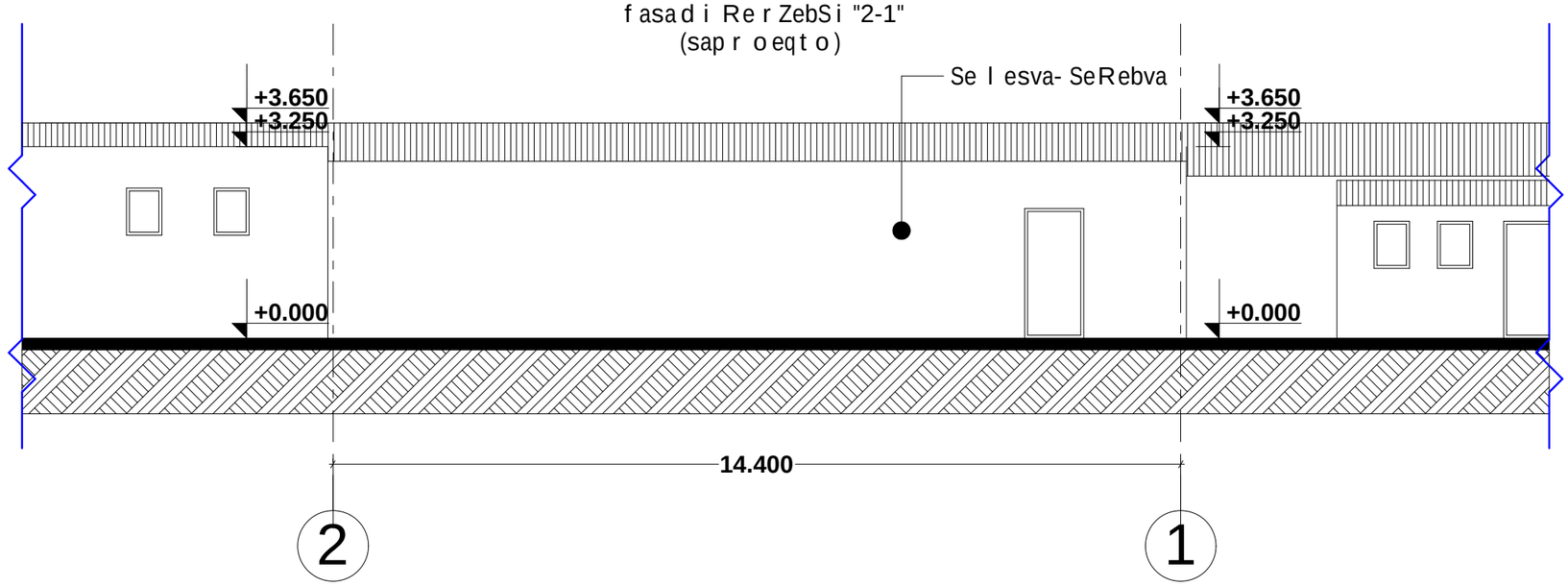

fasadi RerZebSi "3-4"
(arsebuli)

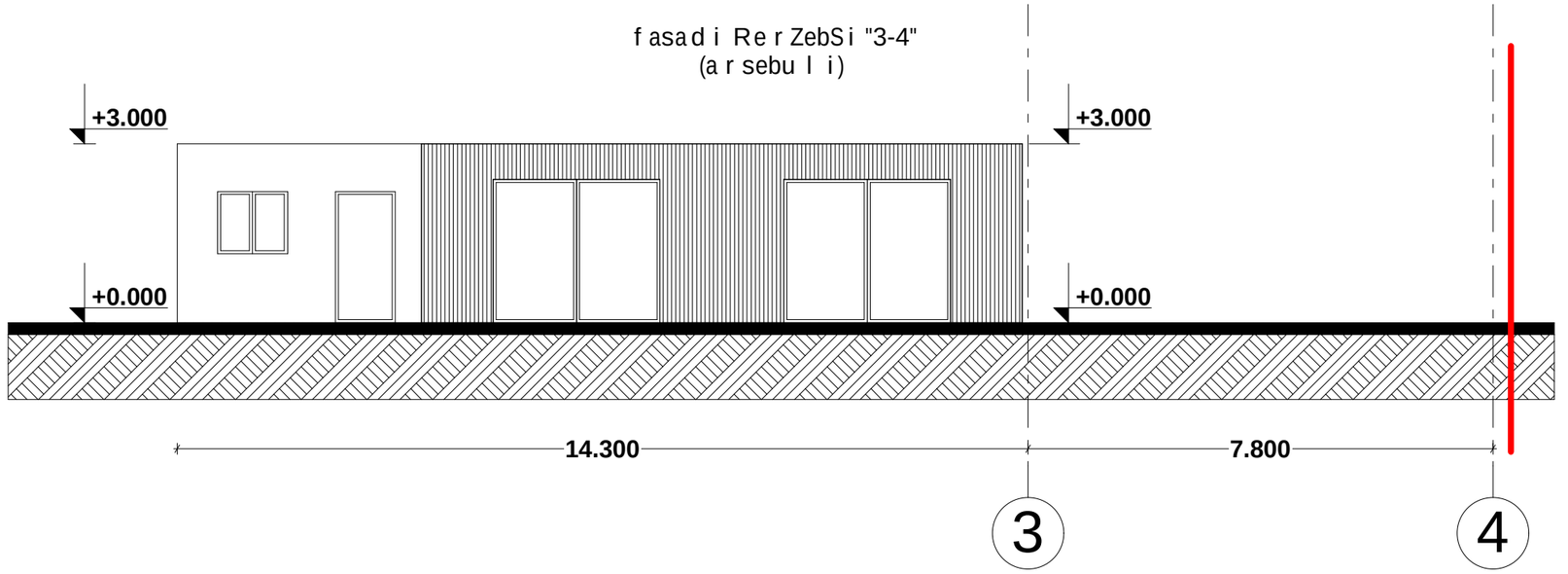

fasadi RerZebSi "3-4"
(saproeqto)

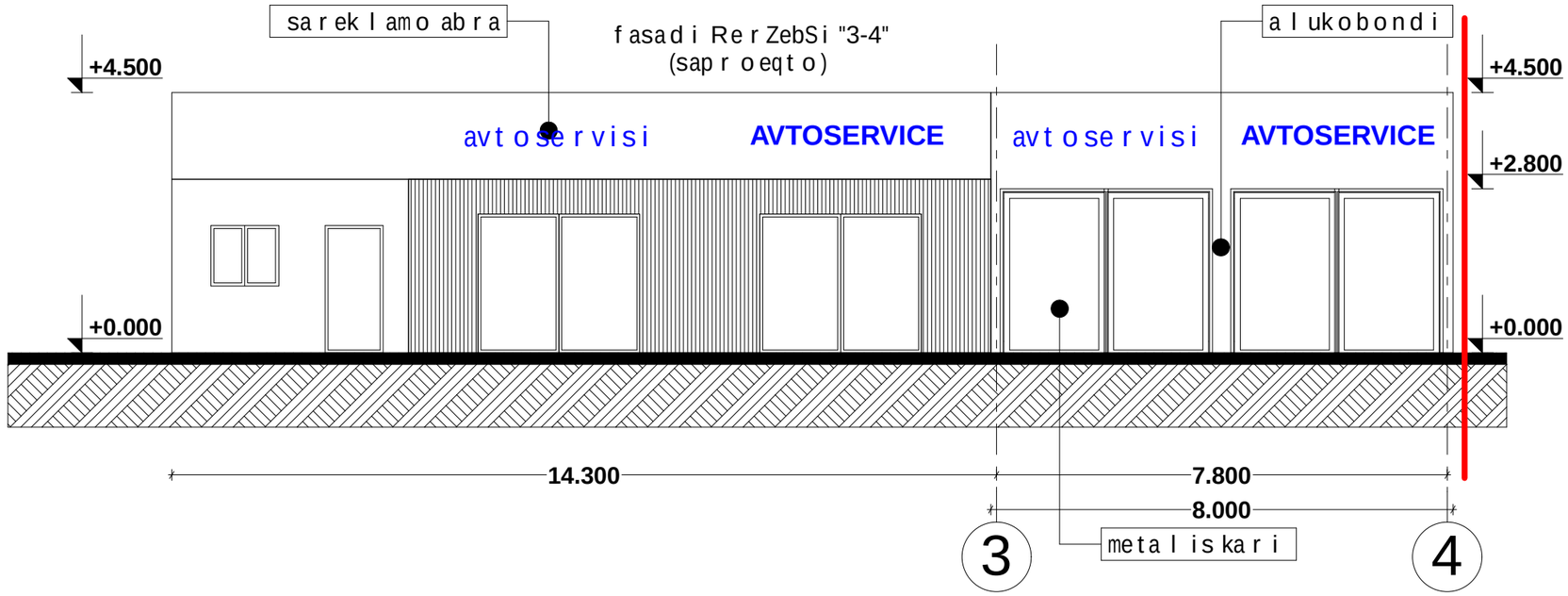

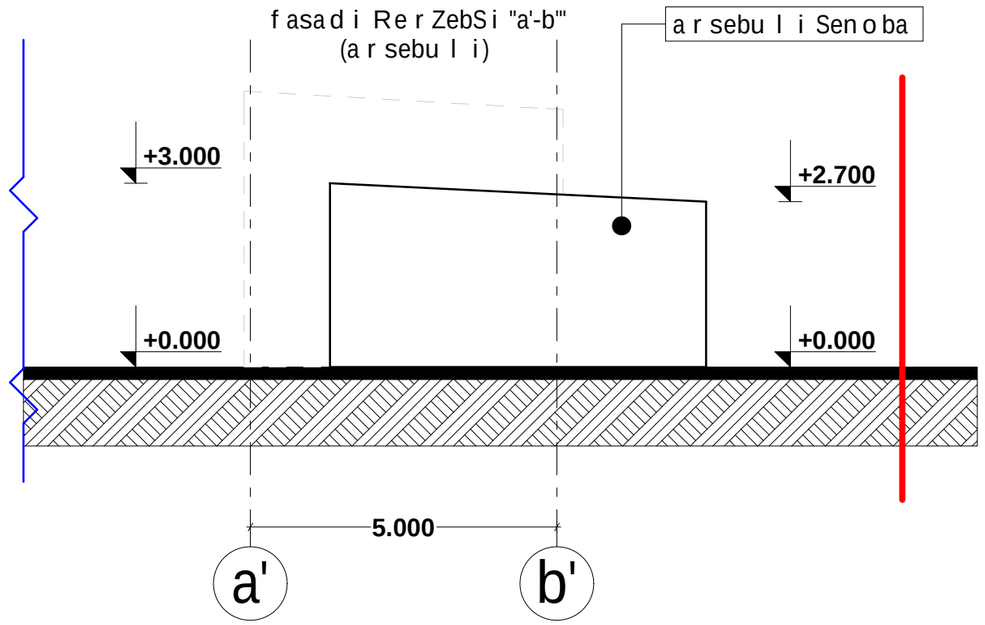
fasadi RerZebSi "a'-b'"
(arsebuli)
arsebuli Senoba
+3.000
+2.700
+0.000
+0.000
5.000
a'
b'

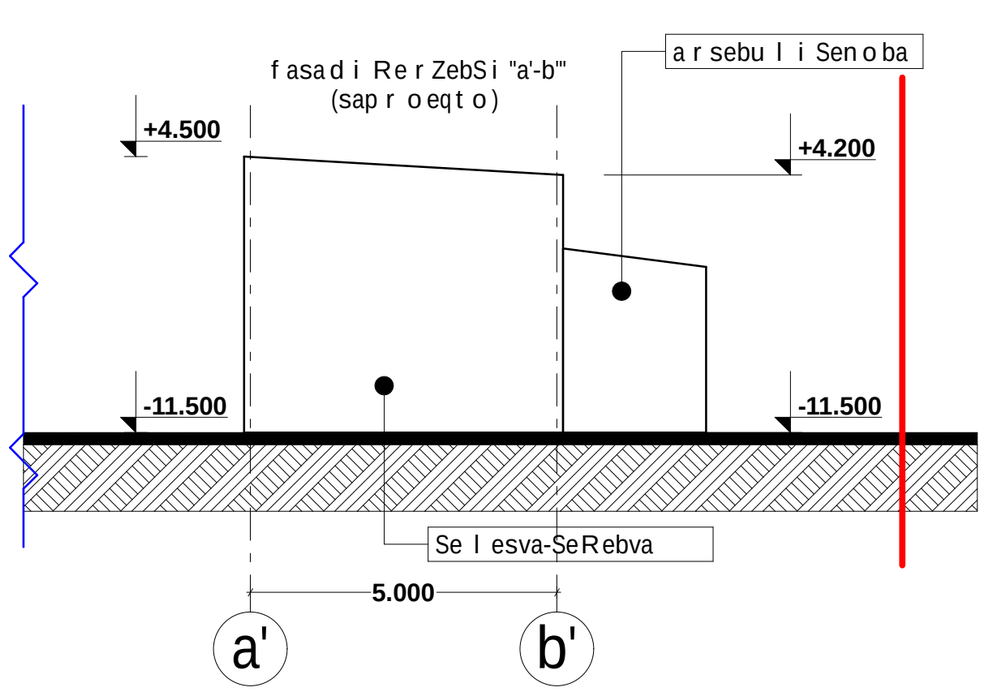
fasadi RerZebSi "a'-b'"
(saproeqto)
arsebuli Senoba
+4.500
+4.200
-11.500
-11.500
Selesva-SeRebva
5.000
a'
b'

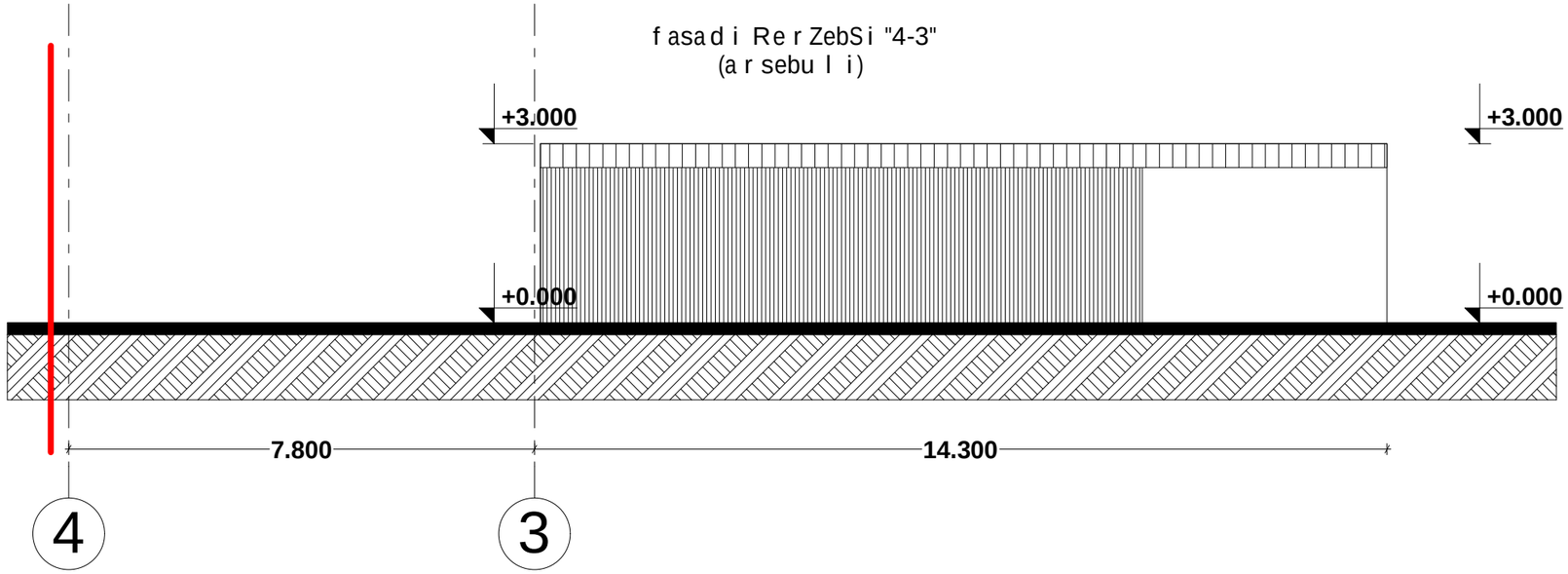
fasadi RerZebSi "4-3"
(arsebuli)
+3.000
+3.000
+0.000
+0.000
7.800
14.300
4
3

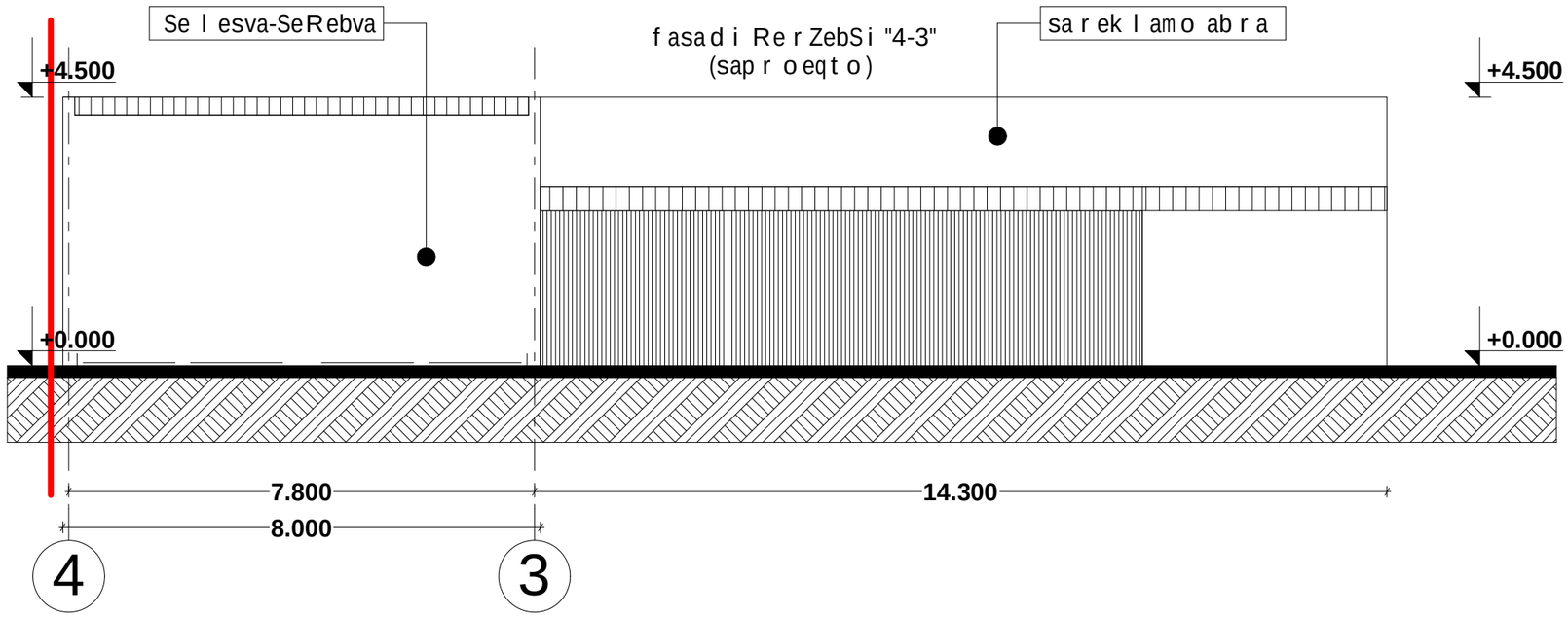
Selesva-SeRebva
fasadi RerZebSi "4-3"
(saproeqto)
sareklamo abra
+4.500
+4.500
+0.000
+0.000
7.800
14.300
8.000
4
3