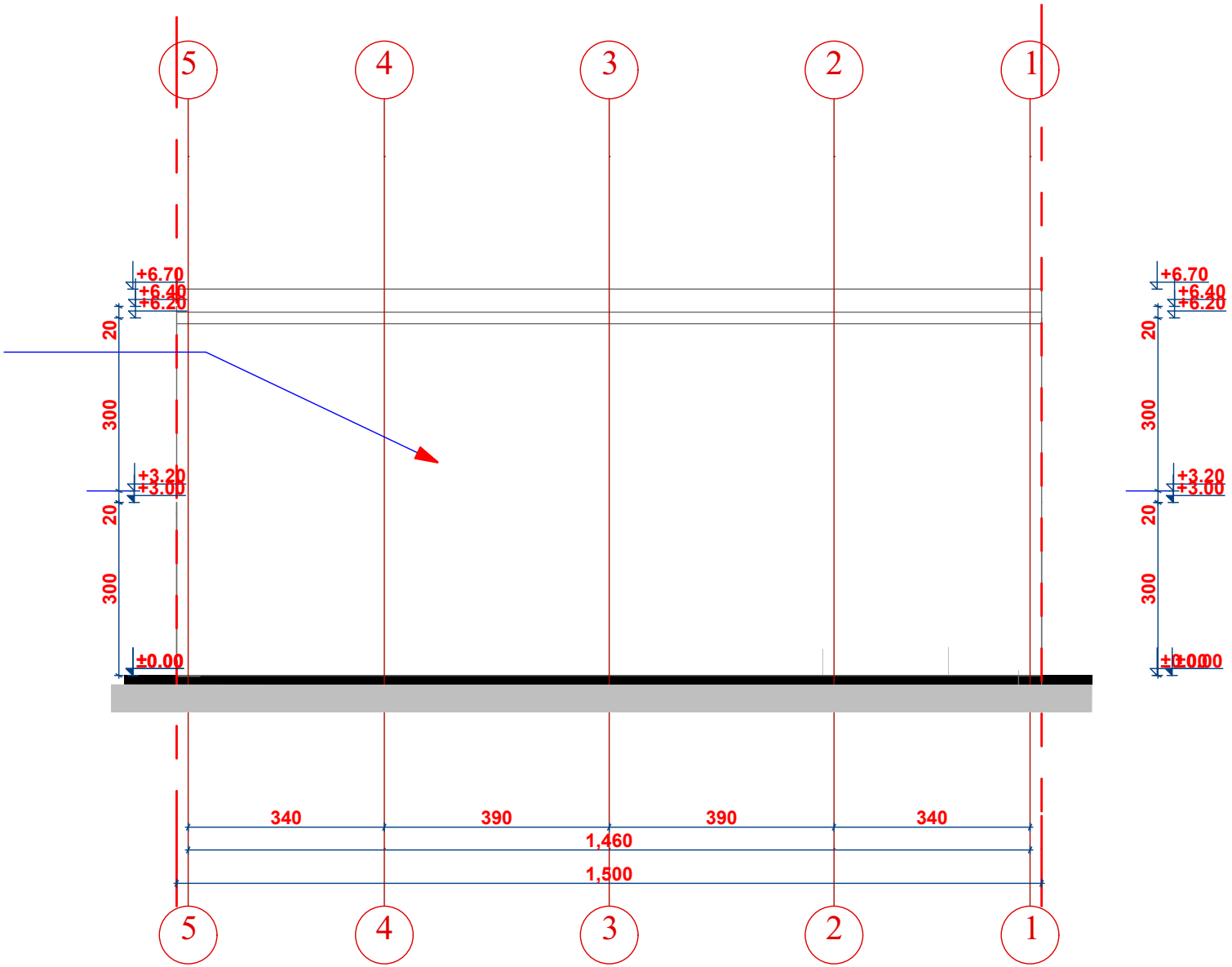
5
4
3
2
1
+6.70
+6.40
+6.20
20
300
+3.20
+3.00
20
300
±0.00
340
390
390
340
1,460
1,500

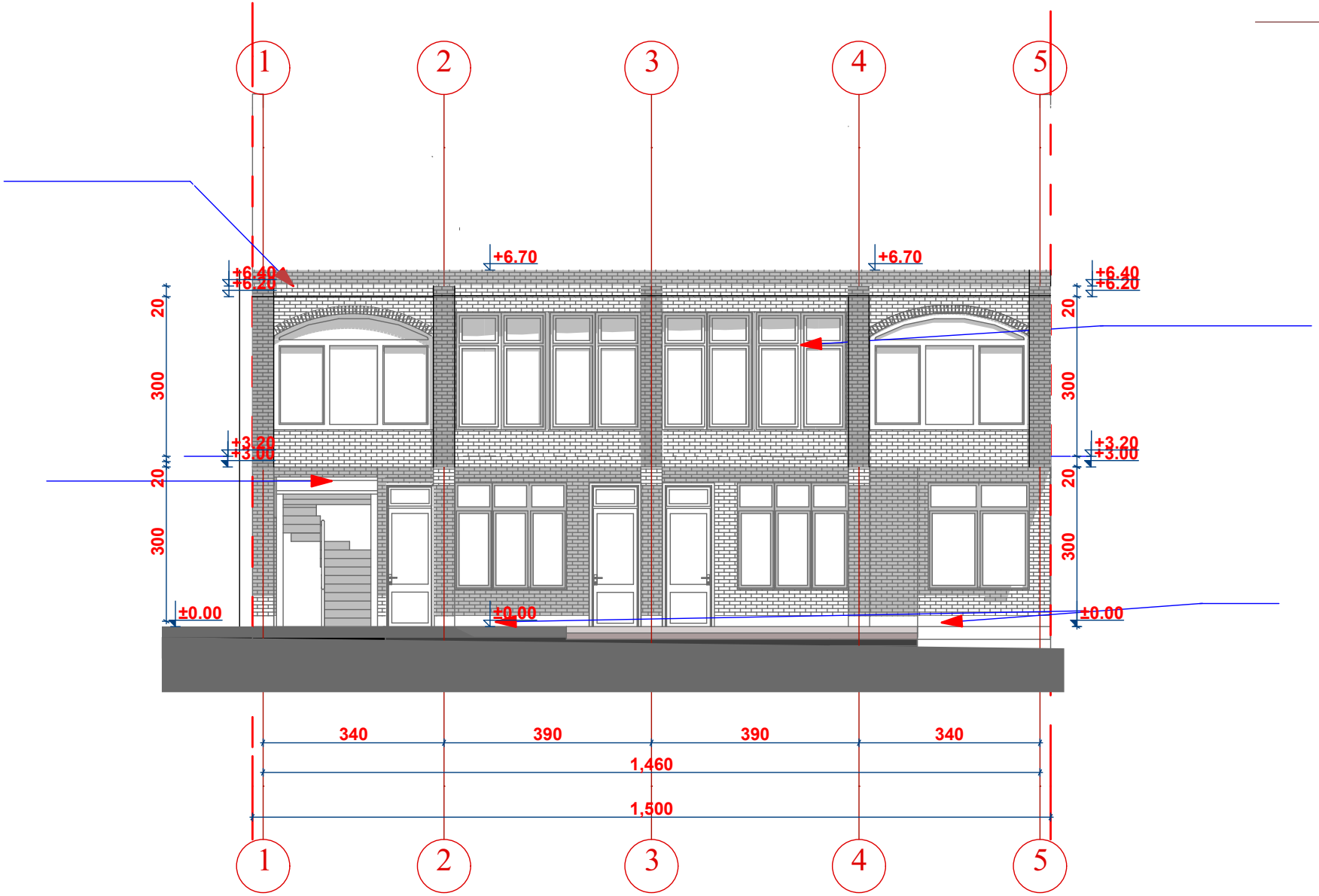
1
2
3
4
5
+6.70
+6.70
+6.40
+6.20
+6.40
+6.20
+3.20
+3.00
+3.20
+3.00
±0.00
±0.00
±0.00
20
300
20
300
20
300
20
300
340
390
390
340
1,460
1,500

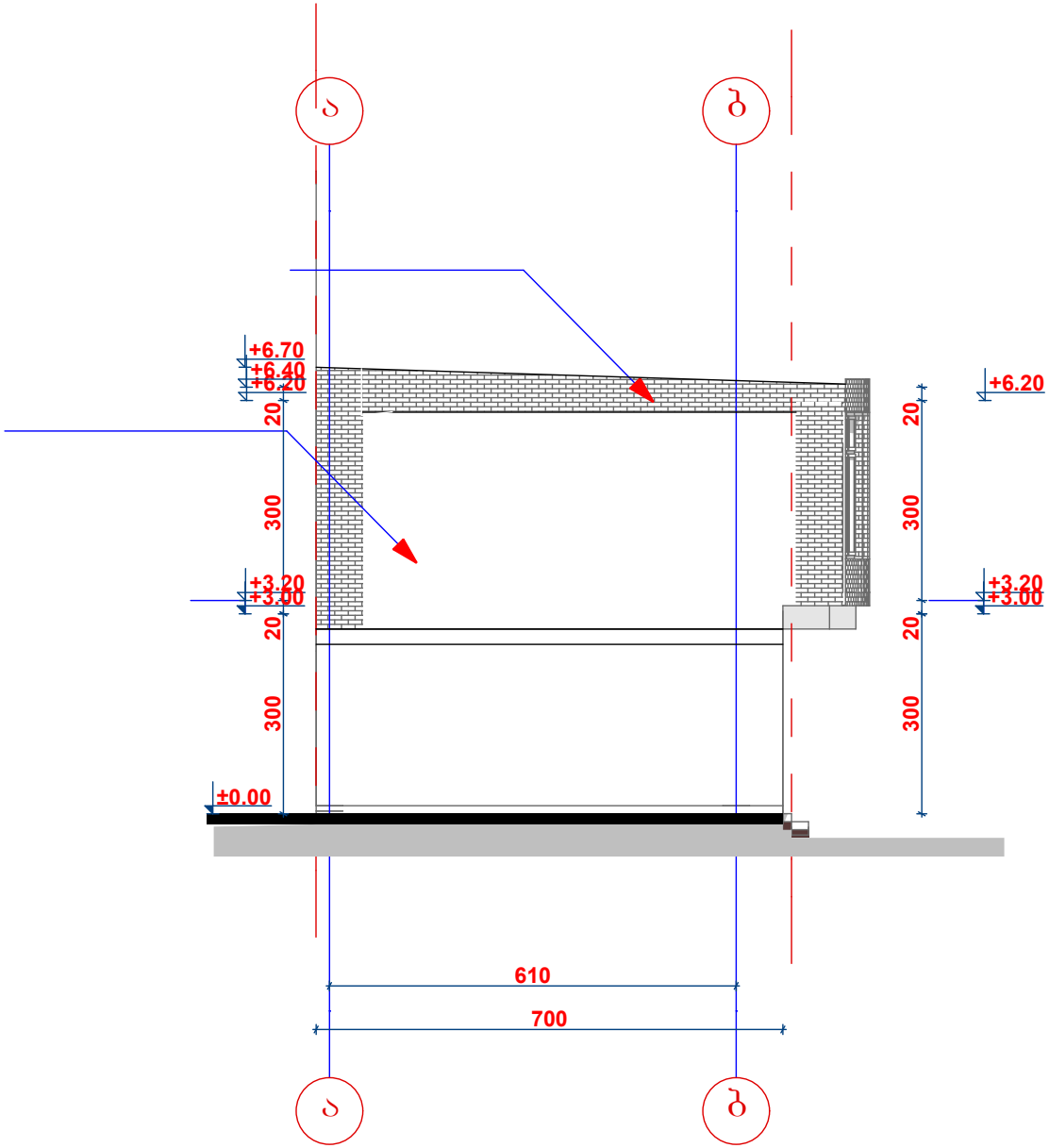
ა
ბ
+6.70
+6.40
+6.20
20
300
+3.20
+3.00
20
300
±0.00
+6.20
20
300
+3.20
+3.00
20
300
610
700
ა
ბ