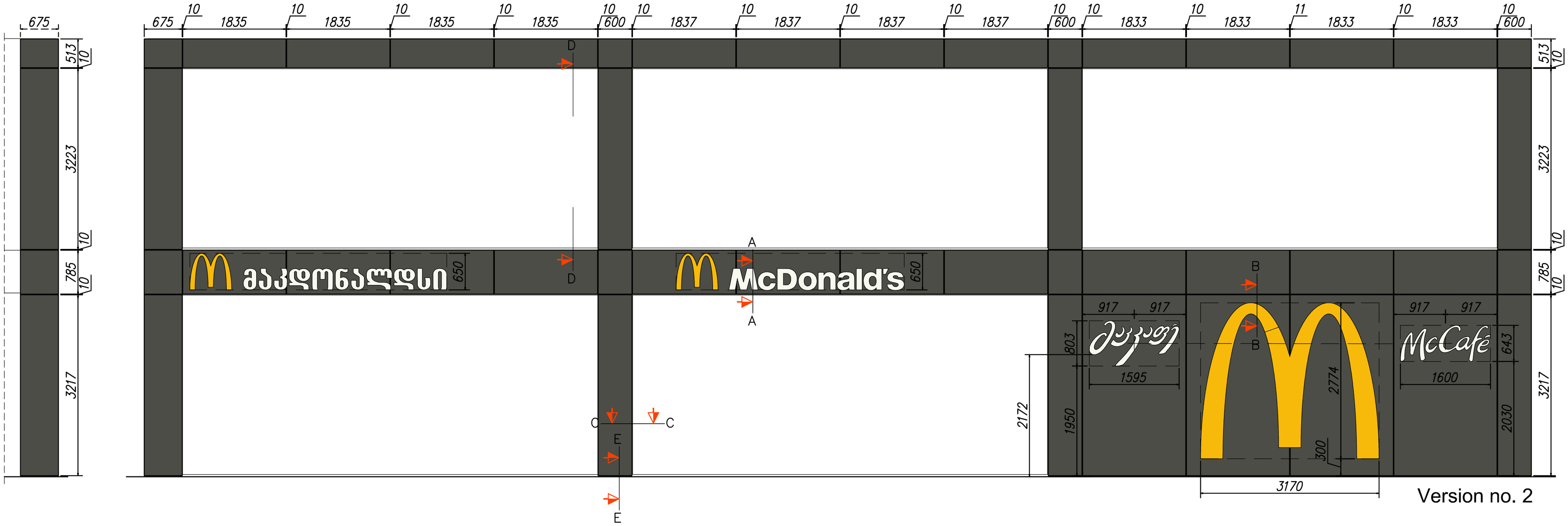

Version no. 2

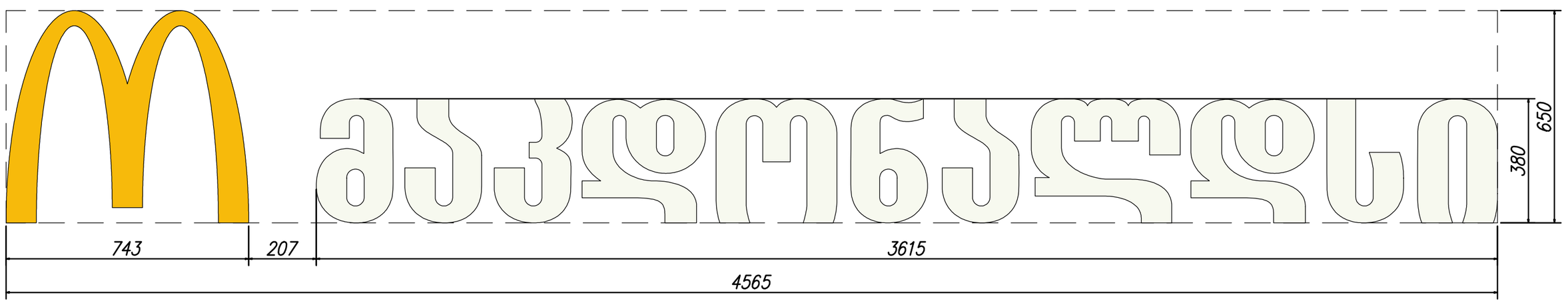

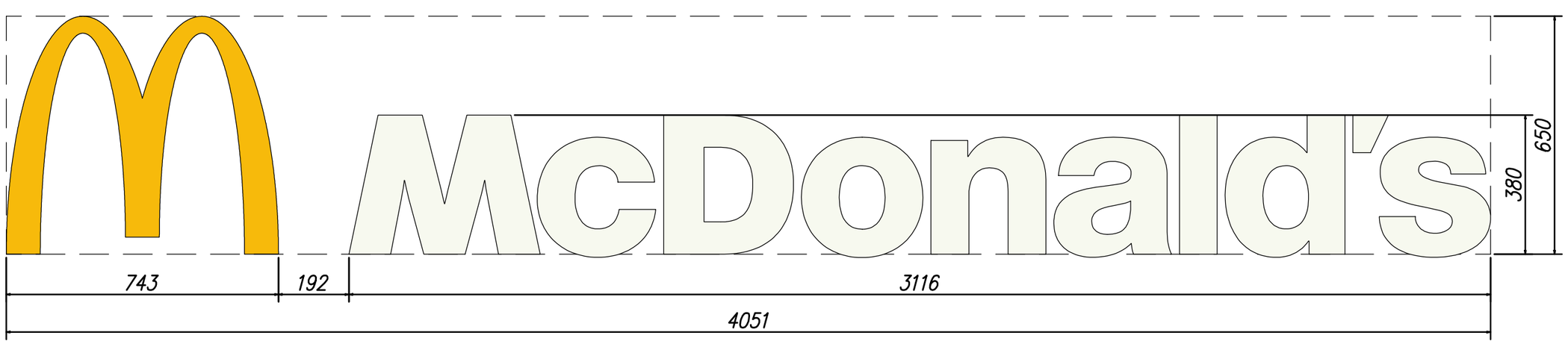

Designed by: B. Zakrocki	Date: 2025-10-30	Brand / Location: McDonald's / Dadiani	Quantity:
ato signage & store fixture	AL.Wojska Polskiego 29 B 62-800 Kalisz, POLAND TEL. +48 62 767-85-00 www.ato.pl	Product: TRESPA cladding	Version: v2
		Sheet: fo approval	No: 1/2

A–A

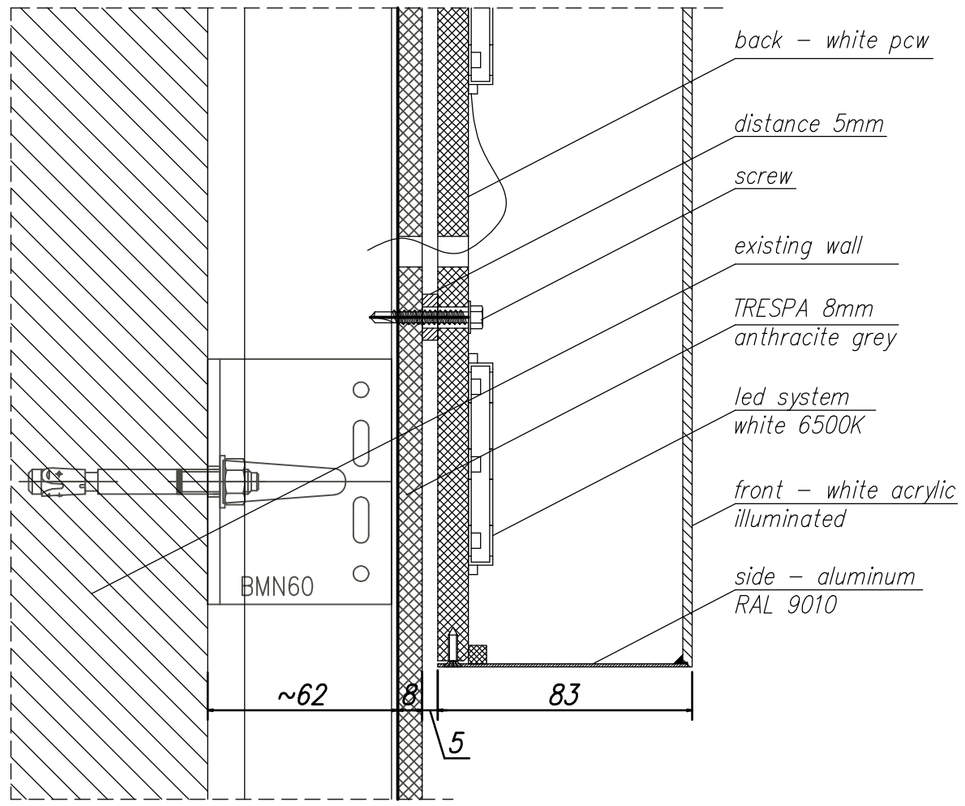

B–B

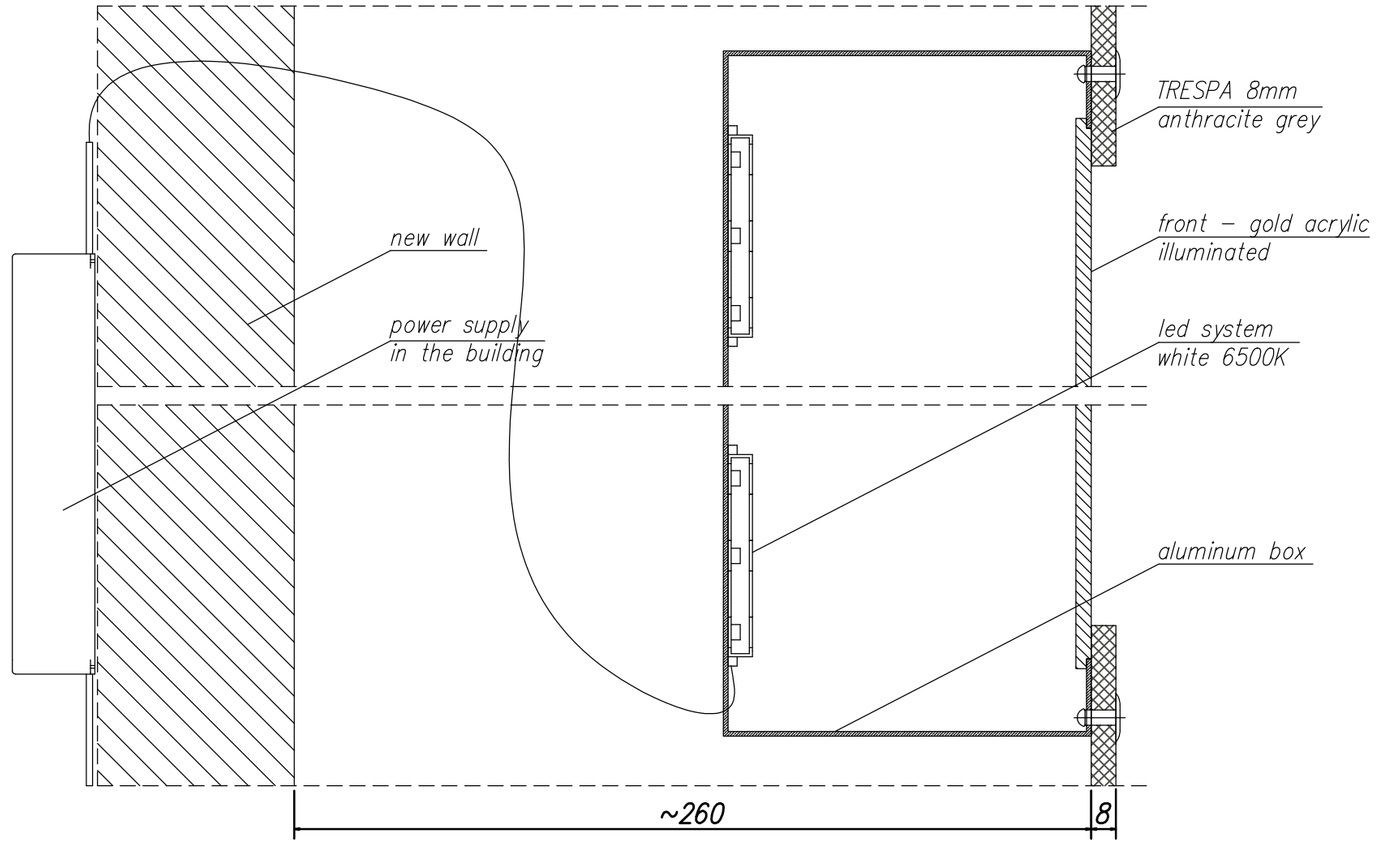

C–C

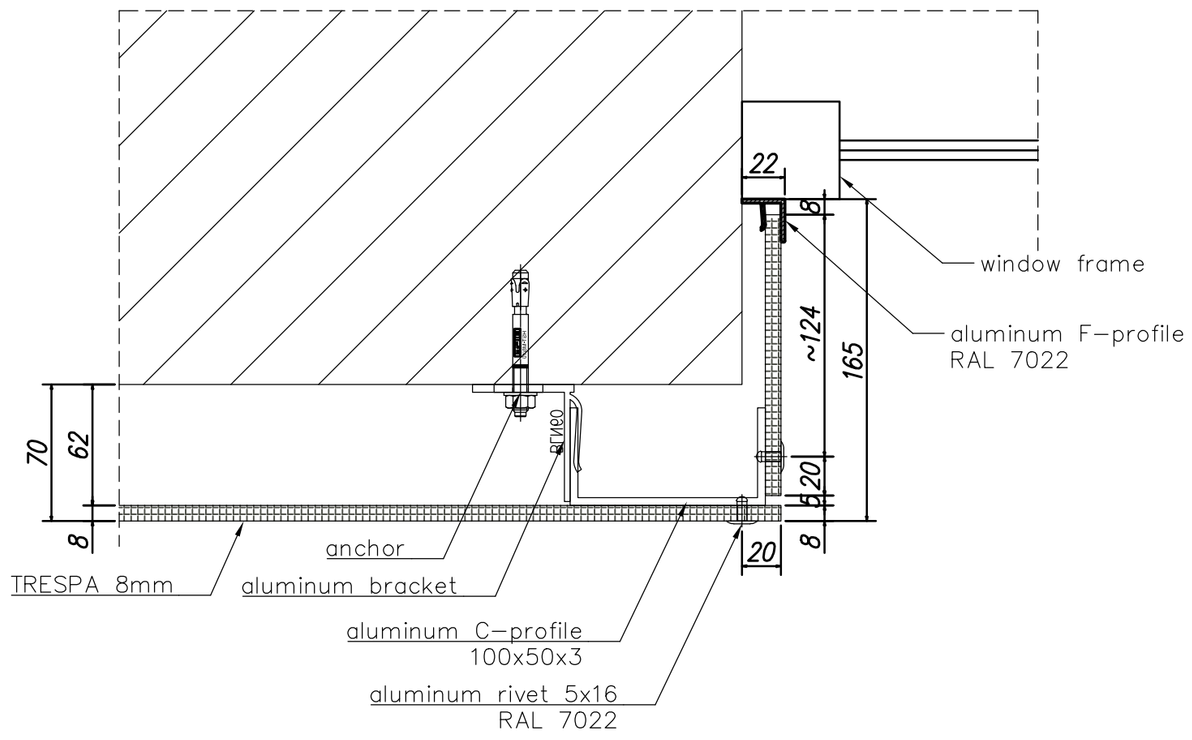

D–D

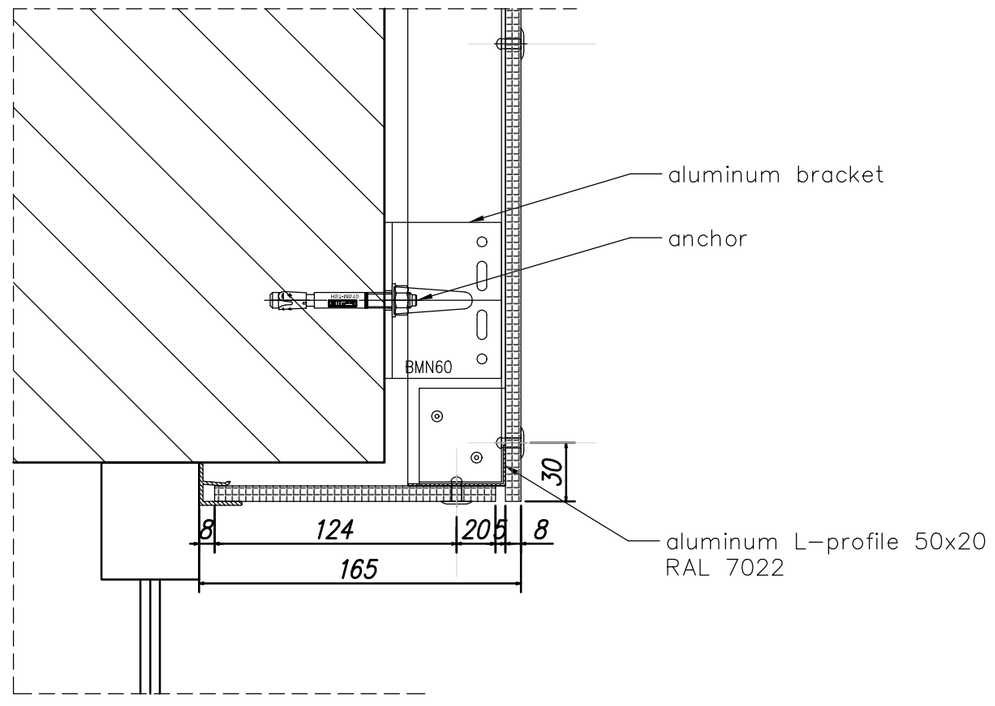

E–E

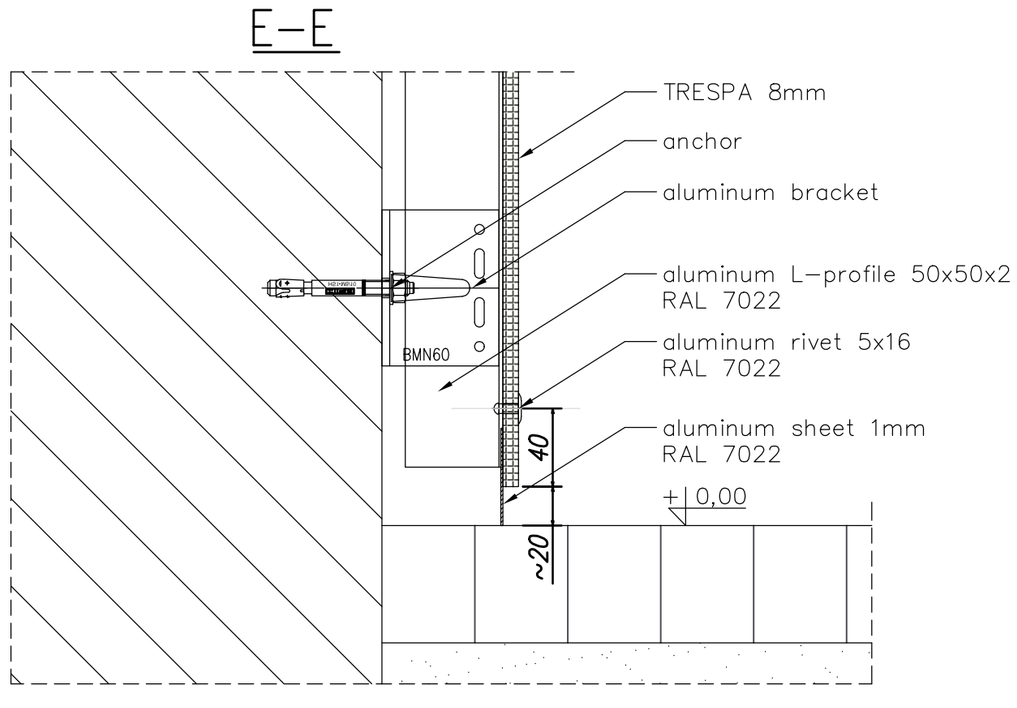

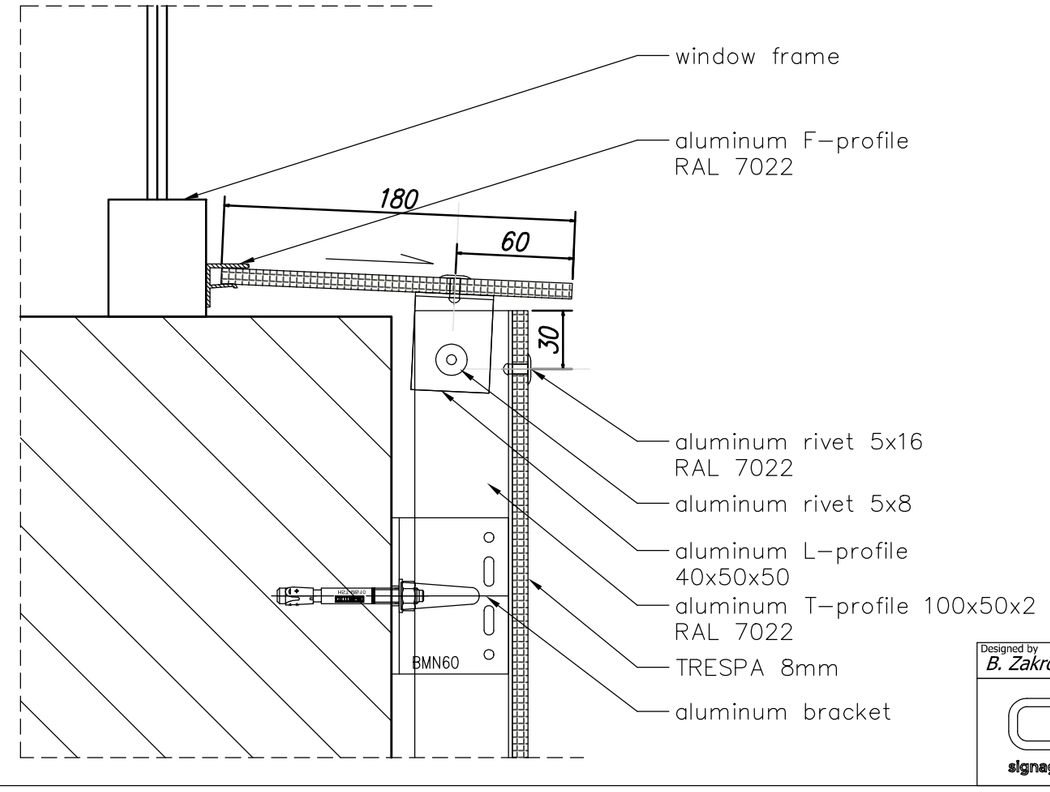

Designed by: B. Zakrocki	Date: 2025-10-30	Brand / Location: McDonald's / Dadiani	Quantity
ato signage & store fixture	AL.Wojska Polskiego 29 B 62-800 Kalisz, POLAND TEL. +48 62 767-85-00 www.ato.pl	Product: TRESPA cladding	Version: v2
		Sheet: fo approval	No: 2/2