fasadi RerZebSi "2-1"
(arsebuli)

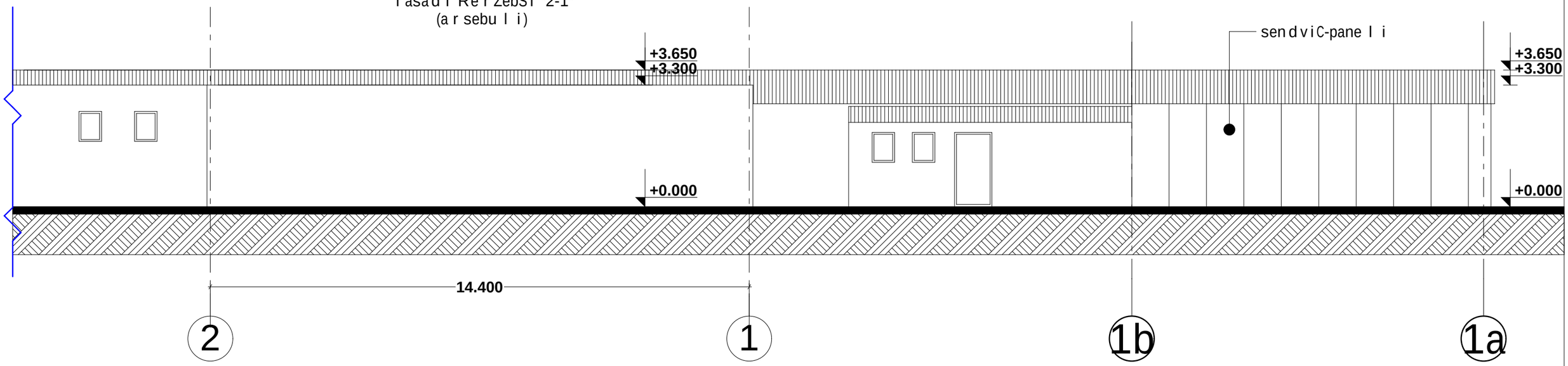

fasadi RerZebSi "2-1"
(saproeqto)

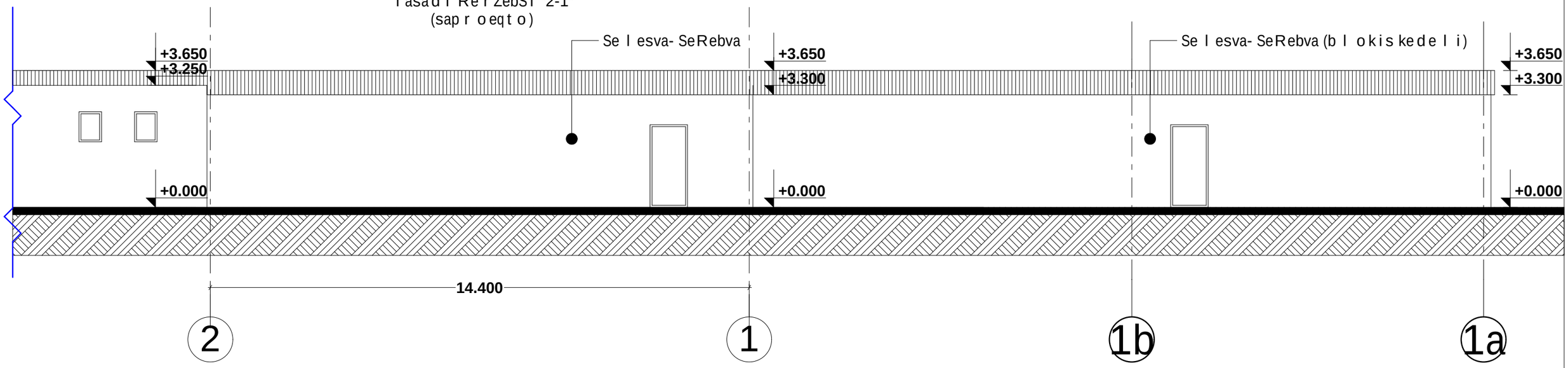

fasadi RerZebSi "b"-a" "
(arsebuli)

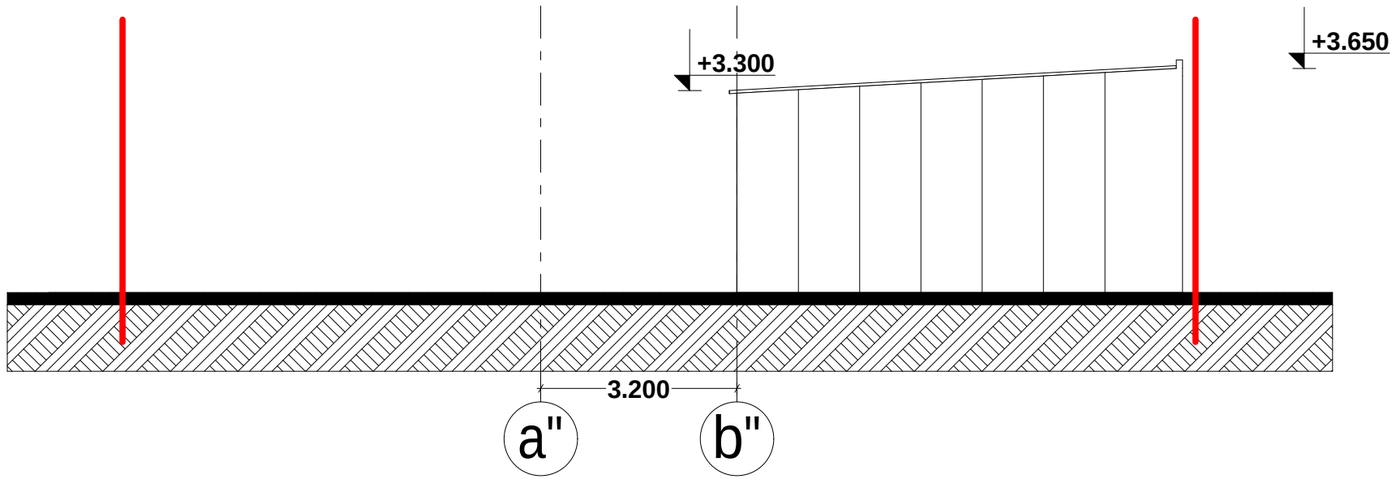

fasadi RerZebSi "b"-a" "
(saproeqto)

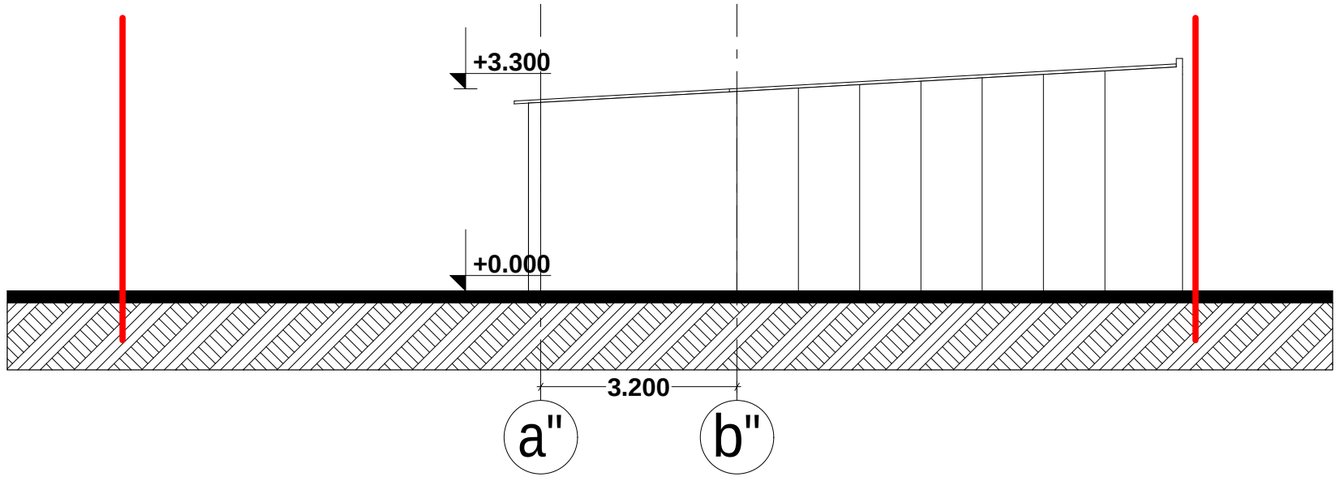

fasadi RerZebSi "3-4"
(arsebuli)

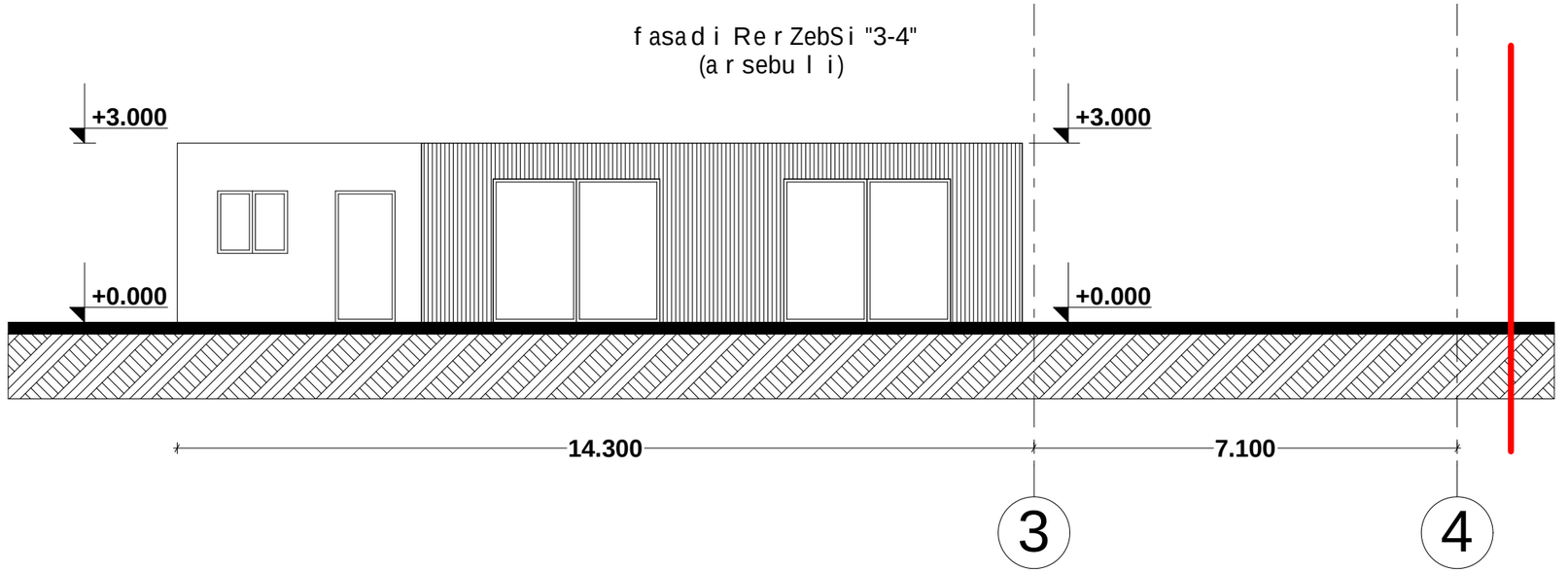

fasadi RerZebSi "3-4"
(saproeqto)

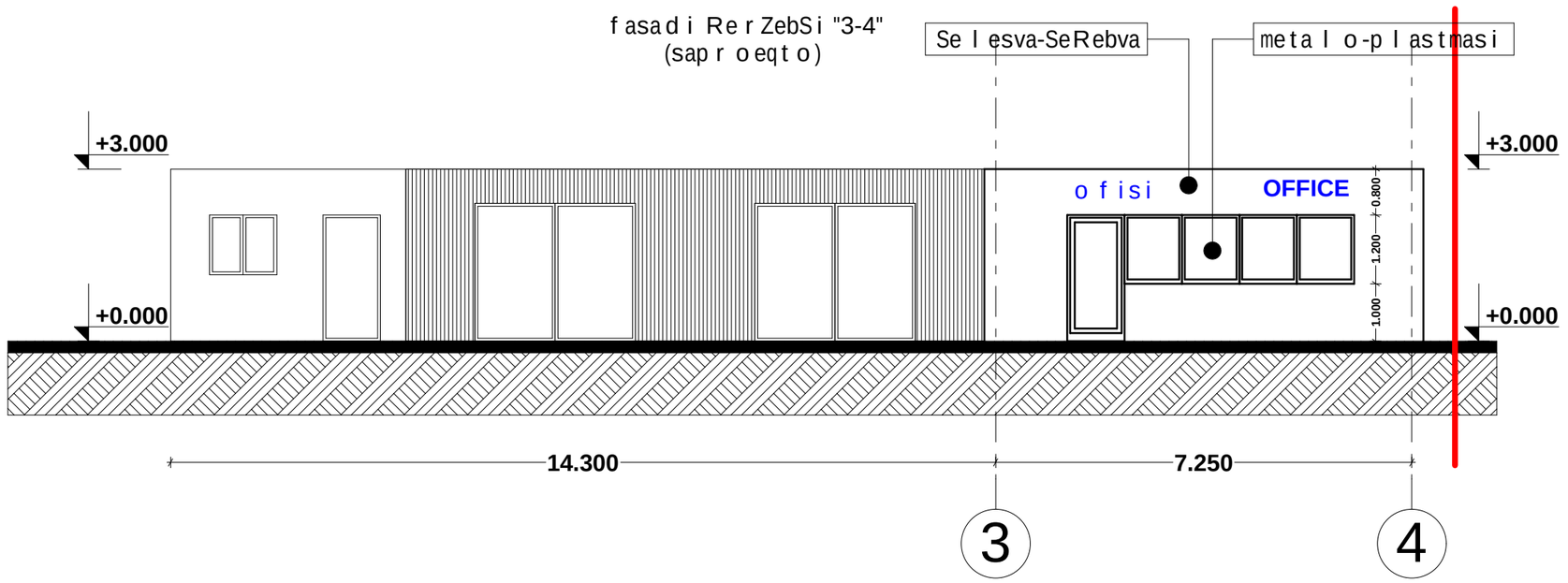

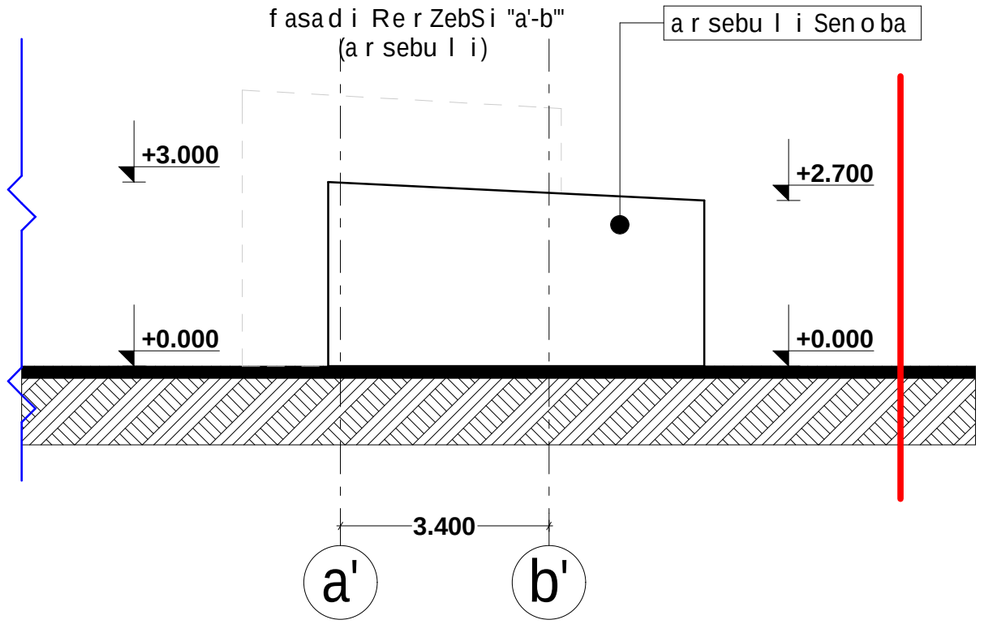
fasadi RerZebSi "a'-b'"
(arsebuli)
arsebuli Senoba
+3.000
+2.700
+0.000
+0.000
3.400
a'
b'

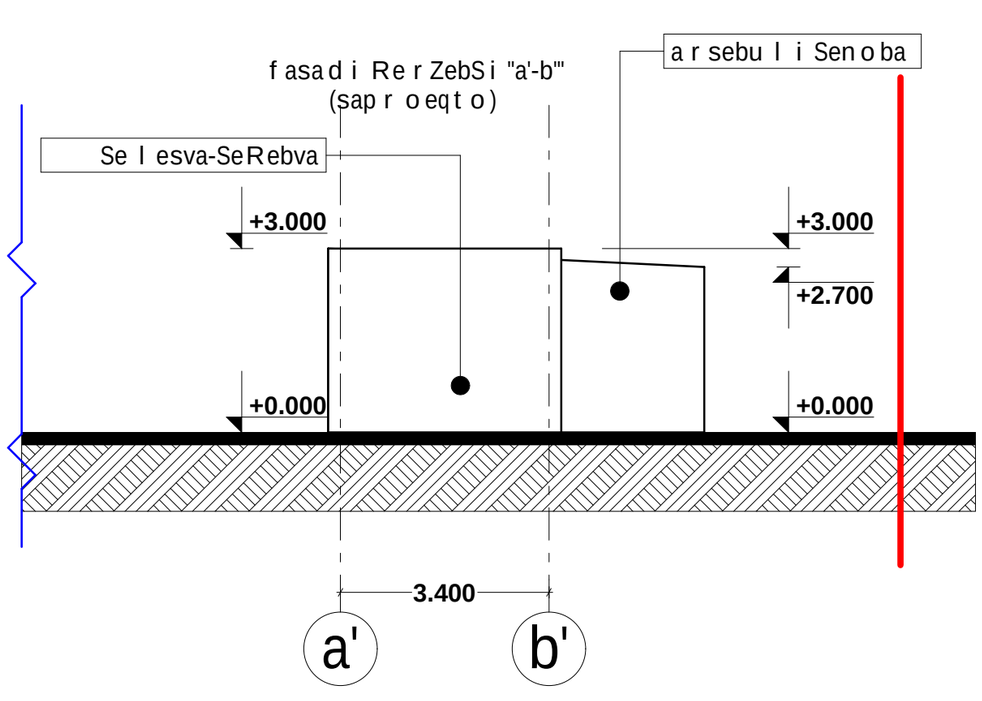
fasadi RerZebSi "a'-b'"
(saproeqto)
arsebuli Senoba
Selesva-SeRebva
+3.000
+3.000
+2.700
+0.000
+0.000
3.400
a'
b'

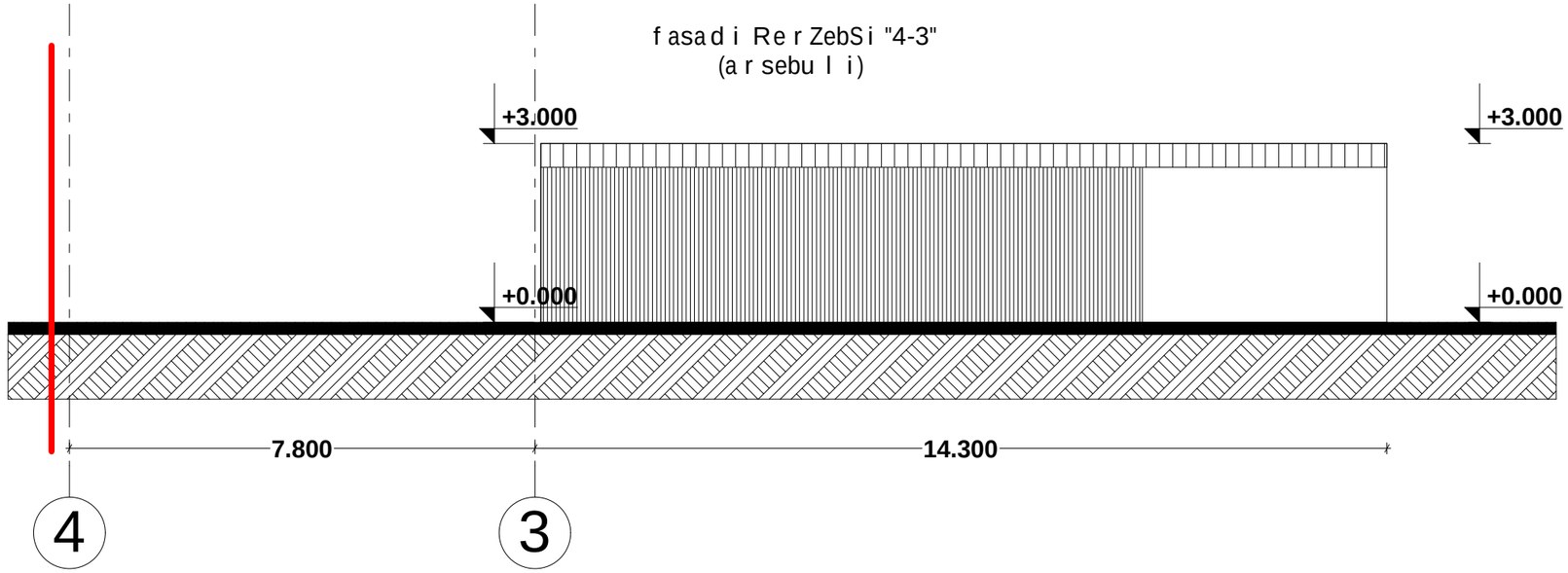
fasadi RerZebSi "4-3"
(arsebuli)
+3.000
+3.000
+0.000
+0.000
7.800
14.300
4
3

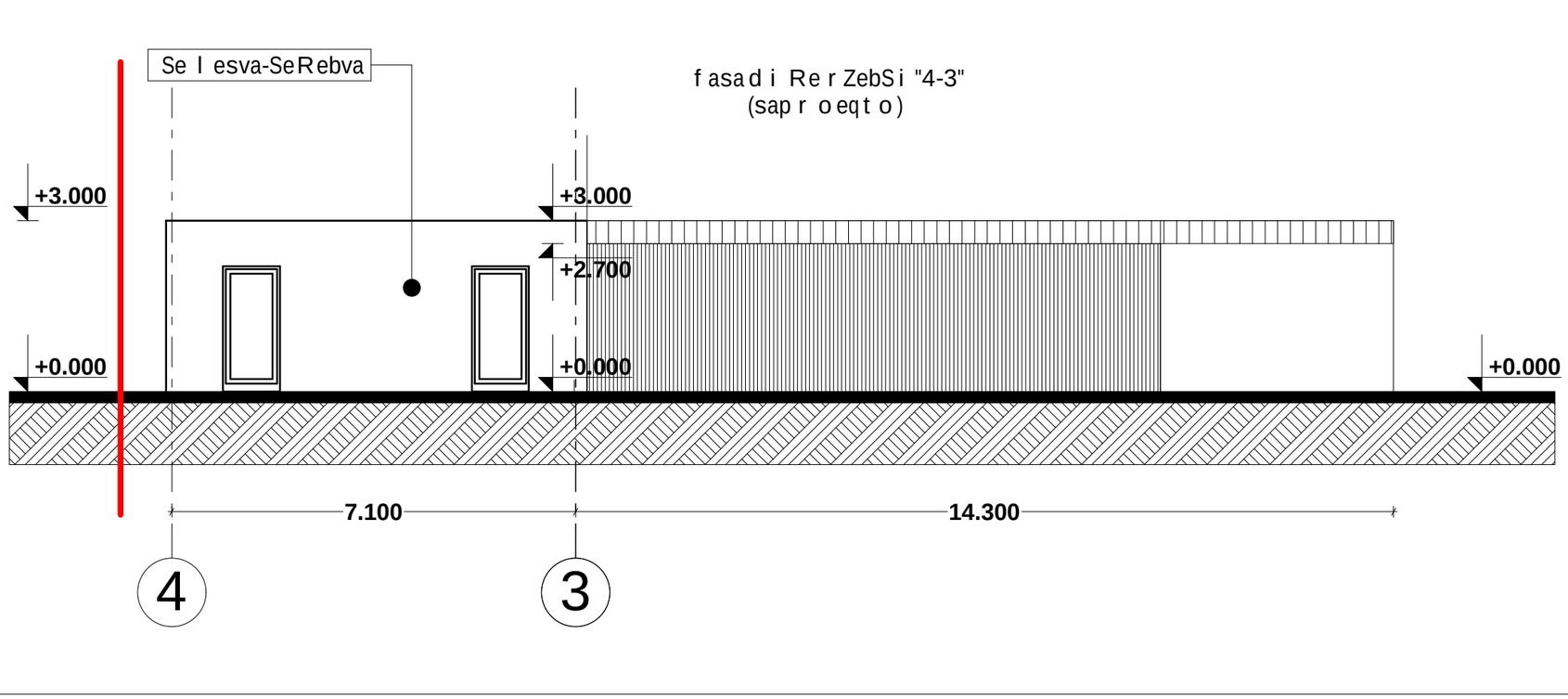
Selesva-SeRebva
fasadi RerZebSi "4-3"
(saproeqto)
+3.000
+3.000
+2.700
+0.000
+0.000
+0.000
7.100
14.300
4
3