

formati	dakveTa #	
A3		A

eqsplikacia

pirobiTi aRniSvnebi

SeniSvna:

1. naxazze saproeqto Senobis noli Seesabameba absolutur niSnuls *418.12*
2. naxaazze zomebi mocemulia santimetrebSi.
3. naxazis yvela cvlileba mSeneblobis procesSi SeTanxmebuli unda iyos proeqtis avtorTan.

damkveTi	Sps"bani-2007", Sps"bani luqsi"		
proeqtis dasaxeleba	q.TbilisSi, baRdadis q. (nakveTi #023/035) mdebare mravalfunqciuri Senobis proeqti.		
Tanamdeboba	gvari		xelmowera
direqtori	k. gilaSvili		
pr. avtori	d. iavriani		
konstruqtori	t. zakutaSvili		
daamuSava	d. iavriani		
Seamowma	d. maxaraSvili		

S.p.s. "bani-2007"

q. Tbilisi, navTluRis quCa #41

stadia	naxazis dasaxeleba		
muSa proeqti	ფოტომონტაჟი		
TariRi	furc. #	furc. raod.	masStabi
2014 w.			



formati	dakveTa #	
A3		A

eqsplikacia

pirobiTi aRniSvnebi

SeniSvna:

1. naxazze saproeqto Senobis noli Seesabameba absolutur niSnuls 418.12
2. naxaazze zomebi mocemulia santimetrebSi.
3. naxazis yvela cvlileba mSeneblobis procesSi SeTanxmebuli unda iyos proeqtis avtorTan.

damkveTi	Sps"bani-2007", Sps"bani luqsi"
proeqtis dasaxeleba	q.TbilisSi, baRdadis q. (nakveTi #023/035) mdebare mravalfunqciuri Senobis proeqti.

Tanamdeboba	gvari	xelmowera
direqtori	k. gilaSvili	
pr. avtori	d. iavriani	
konstruqtori	t. zakutaSvili	
daamuSava	d. iavriani	
Seamowma	d. maxaraSvili	

S.p.s. "bani-2007"

q. Tbilisi, navTluRis quCa #41

stadia	naxazis dasaxeleba
muSa proeqti	ფოტომონტაჟი

TariRi	furc. #	furc. raod.	masStabi
2014 w.			



formati	dakveTa #	
A3		A

eqsplikacia

pirobiTi aRniSvnebi

SeniSvna:

1. naxazze saproeqto Senobis noli Seesabameba absolutur niSnuls *418.12*
2. naxaazze zomebi mocemulia santimetrebSi.
3. naxazis yvela cvlileba mSeneblobis procesSi SeTanxmebuli unda iyos proeqtis avtorTan.

damkveTi	Sps"bani-2007", Sps"bani luqsi"		
proeqtis dasaxeleba	q.TbilisSi, baRdadis q. (nakveTi #023/035) mdebare mravalfunqciuri Senobis proeqti.		
Tanamdeboba	gvari	xelmowera	
direqtori	k. gilaSvili		
pr. avtori	d. iavriani		
konstruqtori	t. zakutaSvili		
daamuSava	d. iavriani		
Seamowma	d. maxaraSvili		

S.p.s. "bani-2007"

q. Tbilisi, navTluRis quCa #41

stadia	naxazis dasaxeleba		
muSa proeqti	ვიზუალიზაცია		
TariRi	furc. #	furc. raod.	masStabi
2014 w.			



formati	dakveTa #	
A3		A

eqsplikacia

pirobiTi aRniSvnebi

SeniSvna:

1. naxazze saproeqto Senobis noli Seesabameba absolutur niSnuls *418.12*
2. naxaazze zomebi mocemulia santimetrebSi.
3. naxazis yvela cvlileba mSeneblobis procesSi SeTanxmebuli unda iyos proeqtis avtorTan.

damkveTi	Sps"bani-2007", Sps"bani luqsi"	
proeqtis dasaxeleba	q.TbilisSi, baRdadis q. (nakveTi #023/035) mdebare mraval funqciuri Senobis proeqti.	
Tanamdeboba	gvari	xelmowera
direqtori	k. gilaSvili	
pr. avtori	d. iavriani	
konstruqtori	t. zakutaSvili	
daamuSava	d. iavriani	
Seamowma	d. maxaraSvili	

S.p.s. "bani-2007"

q. Tbilisi, navTluRis quCa #41

stadia	naxazis dasaxeleba		
muSa proeqti	ვიზუალიზაცია		
TariRi	furc. #	furc. raod.	masStabi
2014 w.			



formati	dakveTa #	
A3		A

eqsplikacia

pirobiTi aRniSvnebi

SeniSvna:

1. naxazze saproeqto Senobis noli Seesabameba absolutur niSnuls *418.12*
2. naxaazze zomebi mocemulia santimetrebSi.
3. naxazis yvela cvlileba mSeneblobis procesSi SeTanxmebuli unda iyos proeqtis avtorTan.

damkveTi	Sps"bani-2007", Sps"bani luqsi"
proeqtis dasaxeleba	q.TbilisSi, baRdadis q. (nakveTi #023/035) mdebare mraval funqciuri Senobis proeqti.

Tanamdeboba	gvari	xelmowera
direqtori	k. gilaSvili	
pr. avtori	d. iavriani	
konstruqtori	t. zakutaSvili	
daamuSava	d. iavriani	
Seamowma	d. maxaraSvili	

S.p.s. "bani-2007"

q. Tbilisi, navTluRis quCa #41

stadia	naxazis dasaxeleba		
muSa proeqti	ვიზუალიზაცია		
TariRi	furc. #	furc. raod.	masStabi
2014 w.			



formati	dakveTa #	
A 3		A

eqsplikacia

pirobiTi aRniSvnebi

SeniSvna:

1. naxazze saproeqto Senobis noli Seesabameba absolutur niSnuls *418.12*
2. naxaazze zomebi mocemulia santimetrebSi.
3. naxazis yvela cvlileba mSeneblobis procesSi SeTanxmebuli unda iyos proeqtis avtorTan.

damkveTi	Sps"bani-2007", Sps"bani luqsi"		
proeqtis dasaxeleba	q.TbilisSi, baRdadis q. (nakveTi #023/035) mdebare mravalfunqciuri Senobis proeqti.		
Tanamdeboba	gvari	xelmowera	
direqtori	k. gilaSvili		
pr. avtori	d. iavriani		
konstruqtori	t. zakutaSvili		
daamuSava	d. iavriani		
Seamowma	d. maxaraSvili		

S.p.s. "bani-2007"

q. Tbilisi, navTluRis quCa #41

stadia	naxazis dasaxeleba		
muSa proeqti	ვიზუალიზაცია		
TariRi	furc. #	furc. raod.	masStabi
2014 w.			



formati	dakveTa #	
A 3		A

eqsplikacia

pirobiTi aRniSvnebi

SeniSvna:

1. naxazze saproeqto Senobis noli Seesabameba absolutur niSnuls *418.12*
2. naxaazze zomebi mocemulia santimetrebSi.
3. naxazis yvela cvlileba mSeneblobis procesSi SeTanxmebuli unda iyos proeqtis avtorTan.

damkveTi	Sps"bani-2007", Sps"bani luqsi"		
proeqtis dasaxeleba	q.TbilisSi, baRdadis q. (nakveTi #023/035) mdebare mraval funqciuri Senobis proeqti.		
Tanamdeboba	gvari	xelmowera	
direqtori	k. gilaSvili		
pr. avtori	d. iavriani		
konstruqtori	t. zakutaSvili		
daamuSava	d. iavriani		
Seamowma	d. maxaraSvili		

S.p.s. "bani-2007"

q. Tbilisi, navTluRis quCa #41

stadia	naxazis dasaxeleba		
muSa proeqti	ვიზუალიზაცია		
TariRi	furc. #	furc. raod.	masStabi
2014 w.			



formati	dakveTa #	
A 3		A

eqsplikacia

pirobiTi aRniSvnebi

SeniSvna:

1. naxazze saproeqto Senobis noli Seesabameba absolutur niSnuls *418.12*
2. naxaazze zomebi mocemulia santimetrebSi.
3. naxazis yvela cvlileba mSeneblobis procesSi SeTanxmebuli unda iyos proeqtis avtorTan.

damkveTi	Sps"bani-2007", Sps"bani luqsi"		
proeqtis dasaxeleba	q.TbilisSi, baRdadis q. (nakveTi #023/035) mdebare mraval funqciuri Senobis proeqti.		
Tanamdeboba	gvari	xelmowera	
direqtori	k. gilaSvili		
pr. avtori	d. iavriani		
konstruqtori	t. zakutaSvili		
daamuSava	d. iavriani		
Seamowma	d. maxaraSvili		

S.p.s. "bani-2007"

q. Tbilisi, navTluRis quCa #41

stadia	naxazis dasaxeleba		
muSa proeqti	ვიზუალიზაცია		
TariRi	furc. #	furc. raod.	masStabi
2014 w.			



#8
metalis saRebavi
RAL 8004

molesva tegsturirebuli
#7
Caparol (Palazzo-185)

#6
molesva tegsturirebuli
Caparol (Palazzo-180)

#1
bazaltis qva daWrili
nacrisferi

#2
molesva tegsturirebuli
Caparol (Palazzo-195)

#3
molesva tegsturirebuli
Caparol (Palazzo-190)

#4
molesva tegsturirebuli
Caparol (Palazzo-240)

#5
molesva tegsturirebuli
Caparol (Palazzo-200)

formati	dakveTa #	
A 3		A

eqsplikacia

pirobiTi aRniSvnebi

SeniSvna:

1. naxazze saproeqto Senobis noli Seesabameba absolutur niSnuls *418.12*
2. naxaazze zomebi mocemulia santimetrebSi.
3. naxazis yvela cvlileba mSeneblobis procesSi SeTanxmebuli unda iyos proeqtis avtorTan.

damkveTi	Sps"bani-2007", Sps"bani luqsi"
proeqtis dasaxeleba	q.Tbilisi, baRdadis q. (nakveTi #023/035) mdebare mravalfunqciuri Senobis proeqti.

Tanamdeboba	gvari	xelmowera
direqtori	k. gilaSvili	
pr. avtori	d. iavriani	
konstruqtori	t. zakutaSvili	
daamuSava	d. iavriani	
Seamowma	d. maxaraSvili	

S.p.s. "bani-2007"

q. Tbilisi, navTluRis quCa #41

stadia	naxazis dasaxeleba		
muSa proeqti	მოსაპირკეთებელი მასალები		
TariRi	furc. #	furc. raod.	masStabi
2014 w.			

#1	liTonis moajiri masala-milkvadrati mina gamWvirvale 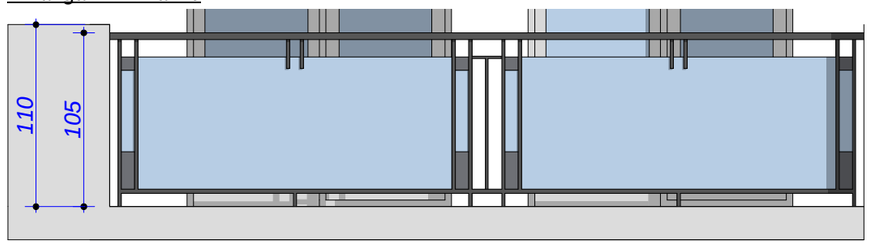
#2	liTonis moajiri masala-milkvadrati iatakis done 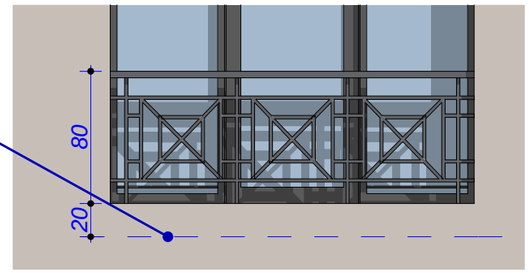
#3	liTonis moajiri masala-milkvadrati -Tunuqis firfita 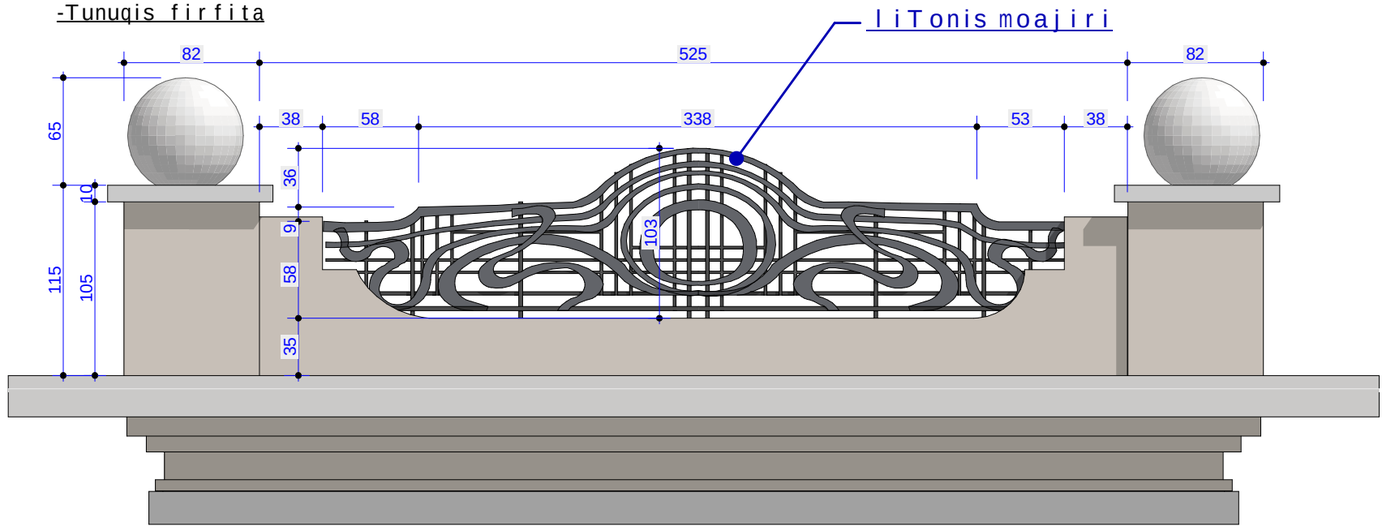

formati A3	dakveTa #	A
eqsplikacia		
pirobiTi aRniSvnebi		
SeniSvna:		

1. naxazze saproeqto Senobis noli Seesabameba absolutur niSnuls *418.12*
2. naxaazze zomebi mocemulia santimetrebSi.
3. naxazis yvela cvlileba mSeneblobis procesSi SeTanxmebuli unda iyos proeqtis avtorTan.

damkveTi	Sps"bani-2007", Sps"bani luqsi"		
proeqtis dasaxeleba	q.TbilisSi, baRdadis q. (nakveTi #023/035) mdebare mravalfunqciuri Senobis proeqti.		
Tanamdeboba	gvari	xelmowera	
direqtori	k. gilaSvili		
pr. avtori	d. iavriani		
konstruqtori	t. zakutaSvili		
daamuSava	d. iavriani		
Seamowma	d. maxaraSvili		
S.p.s. "bani-2007"			
q. Tbilisi, navTluRis quCa #41			
stadia	naxazis dasaxeleba		
muSa proeqti	ფასადის მასალების სპეციფიკაცია		
TariRi	furc. #	furc. raod.	masStabi
2014 w.			

fasadis detali

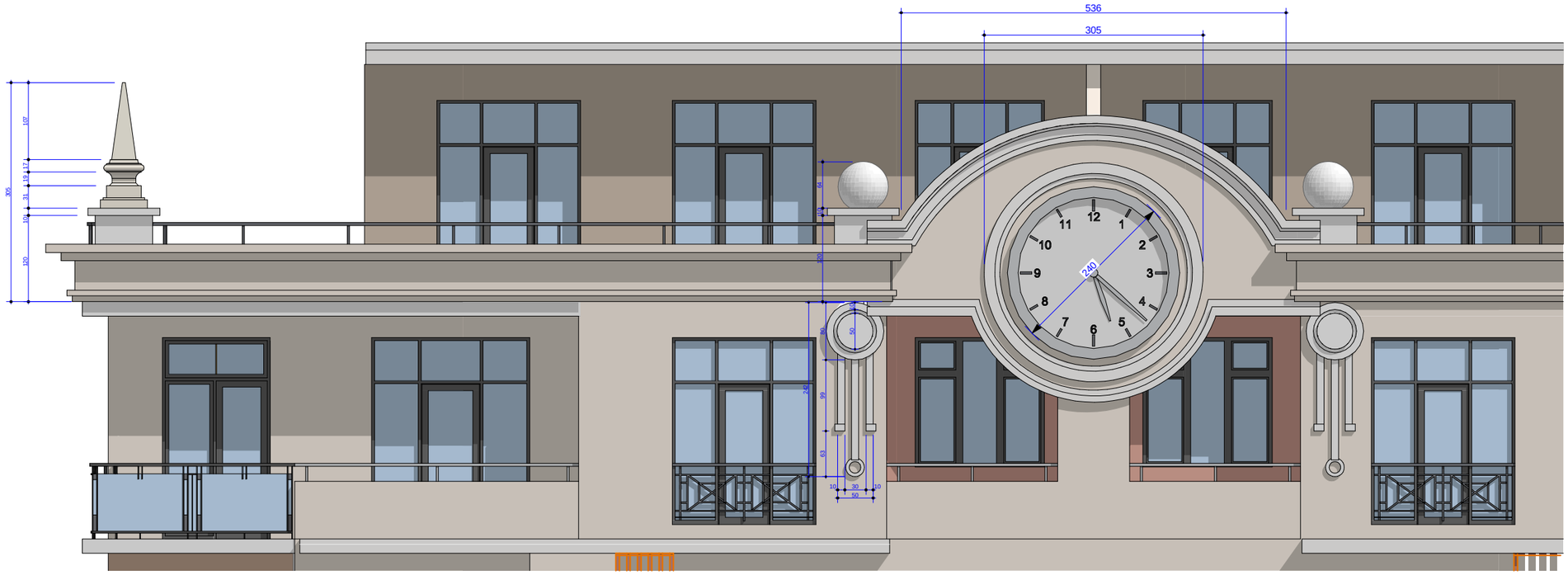

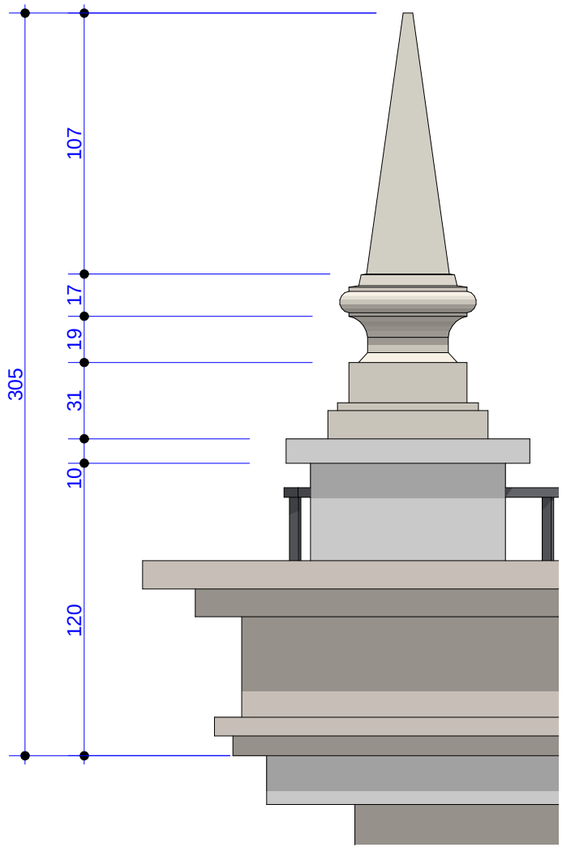

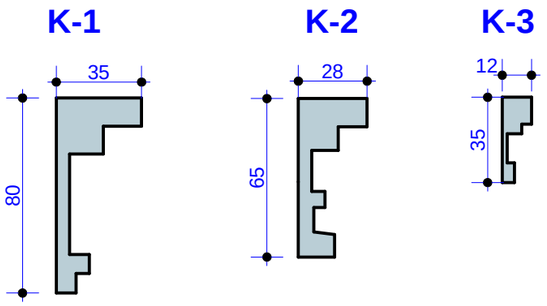

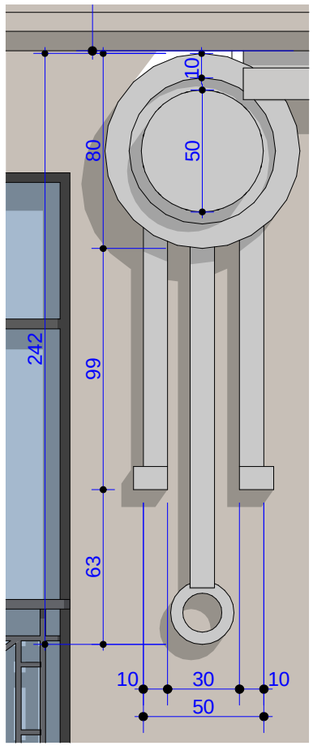

formati	dakveTa #	
A 3		A

eqsplikacia

pirobiTi aRniSvnebi

SeniSvna:

1. naxazze saproeqto Senobis noli Seesabameba absolutur niSnuls *418.12*
2. naxaazze zomebi mocemulia santimetrebSi.
3. naxazis yvela cvlileba mSenebl obis procesSi SeTanxmebuli unda iyos proeqtis avtorTan.

damkveTi	Sps"bani-2007", Sps"bani luqsi"	
proeqtis dasaxeleba	q.Tbilisi, baRdadis q. (nakveTi #023/035) mdebare mraval funqciuri Senobis proeqti.	
Tanamdeboba	gvari	xelmowera
direqtori	k. gilaSvili	
pr. avtori	d. iavriani	
konstruqtori	t. zakutaSvili	
daamuSava	d. iavriani	
Seamowma	d. maxaraSvili	
S.p.s. "bani-2007"		
q. Tbilisi, navTluRis quCa #41		
stadia	naxazis dasaxeleba	
muSa proeqti	ფასადის მასალების სპეციფიკაცია	
TariRi	furc. #	furc. raod.	masStabi
2014 w.			

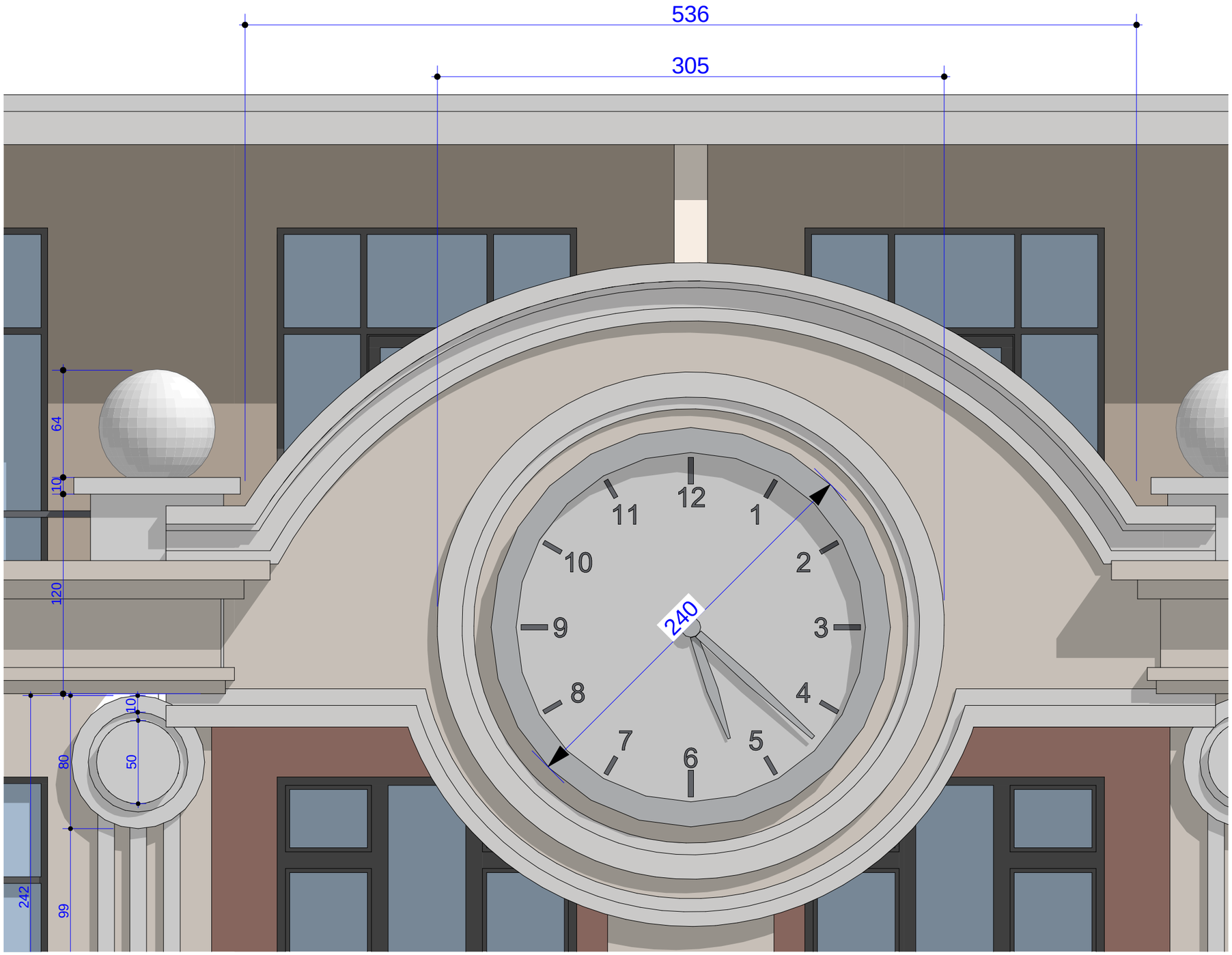

formati	dakveTa #	
A 3		A

eqsplikacia

pirobiTi aRniSvnebi

SeniSvna:

1. naxazze saproeqto Senobis noli Seesabameba absolutur niSnuls *418.12*
2. naxaazze zomebi mocemulia santimetrebSi.
3. naxazis yvela cvlileba mSeneblobis procesSi SeTanxmebuli unda iyos proeqtis avtorTan.

damkveTi	Sps"bani-2007", Sps"bani luqsi"		
proeqtis dasaxeleba	q.TbilisSi, baRdadis q. (nakveTi #023/035) mdebare mravalfunqciuri Senobis proeqti.		
Tanamdeboba	gvari	xelmowera	
direqtori	k. gilaSvili		
pr. avtori	d. iavriani		
konstruqtori	t. zakutaSvili		
daamuSava	d. iavriani		
Seamowma	d. maxaraSvili		

S.p.s. "bani-2007"

q. Tbilisi, navTluRis quCa #41

stadia	naxazis dasaxeleba		
muSa proeqti	ფასადის მასალების სპეციფიკაცია		
TariRi	furc. #	furc. raod.	masStabi
2014 w.			