# fasadi 1-5 RerZebSi

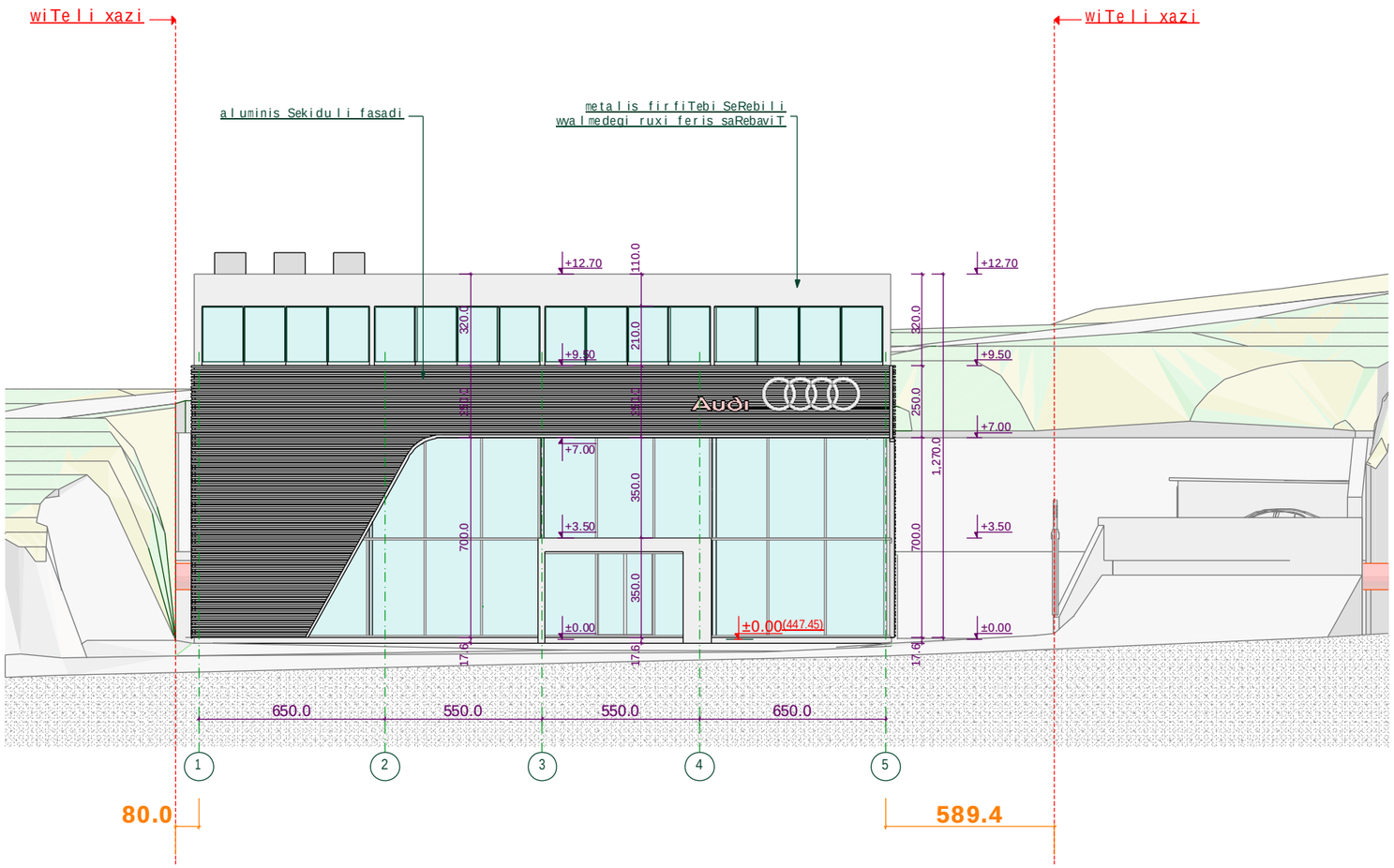


formati: A3 | dakveTa: #2014.01 | Tbilisi 2014 weli

pirobiTi niSnebi

SeniSvnebi

zomebi mocemulia milimetrebSi

simaRleebi mocemulia metrebSi

obieqti

audis safirmo servis-centri
mis; q. Tbilisi, sof. diRmi, TeTri duqnis mimdebare teritoria.
nakveTi: 01.72.14.034.795

damkveTi

S.p.s. „iberia avtohausi„
saidentifikacio kodi:
236081832
iur. misamarTi: q. mcxeTa, d.aRmaSenebl is q.
tel: 2 24 11 11

Semsrulebeli

S.p.s. „anagi„
saidentifikacio kodi:
245416401
iur. misamarTi: q. baTumi, vaJa-fSavelas 42/5

| | | | |
|---|---|---|---|
| direqtori | i.gogolisvili | | |
| mTavari arqiteqtori | z.kvirkvelia | | |
| masStabi | 1 : 200 | fasadi 1-5 RerZebSi | |
| TariRi | 2014 w. | | |
| stadia | | furcelebi | furceli |
| arqiteqturuli proeqti | | 20 | a-10 |

# fasadi a-i RerZebSi

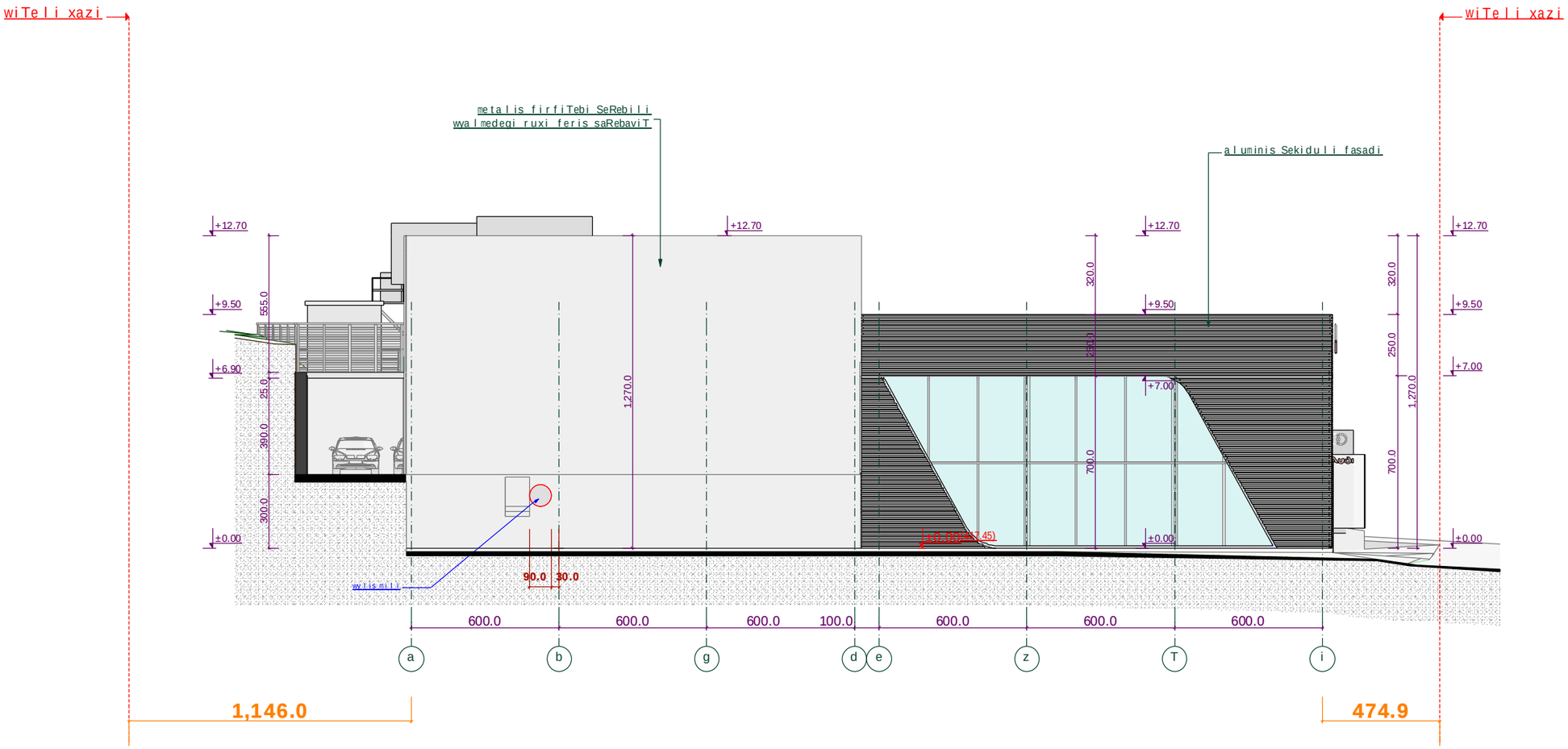


formati: A3 | dakveTa: #2014.01 | Tbilisi 2014 weli

pirobiTi niSnebi

## SeniSvnebi

zomebi mocemulia milimetrebSi

simaRleebi mocemulia metrebSi

## obieqti

audisafirmo servis-centri
misi, q. Tbilisi, sof. diRmi, TeTri dugnis mimdebare teritoria
nakveTi: 01.7214.034.795

## damkveTi

S.p.s. „iberia avtohausi„
saidentifikacio kodi:
236081832
iur. misamarTi: q. mcxeTa, d.aRmaSenebl is q.
tel: 2 24 11 11

## Semsrulebeli

S.p.s. „anagi„
saidentifikacio kodi:
245416401
iur. misamarTi: q. baTumi, vaJa-fSavelas 42/5

| | | | |
|---|---|---|---|
| direqtori | igogoliSvili | | |
| mTavari arqiteqtori | zkvirkvelia | | |
| | | | |
| masStabi | 1 : 200 | fasadi a-i RerZebSi | |
| TariRi | 2014 w. | | |
| stadia | | furcelebi | furceli |
| arqiteqturuli proeqti | | 20 | a-11 |

# fasadi i-a RerZebSi

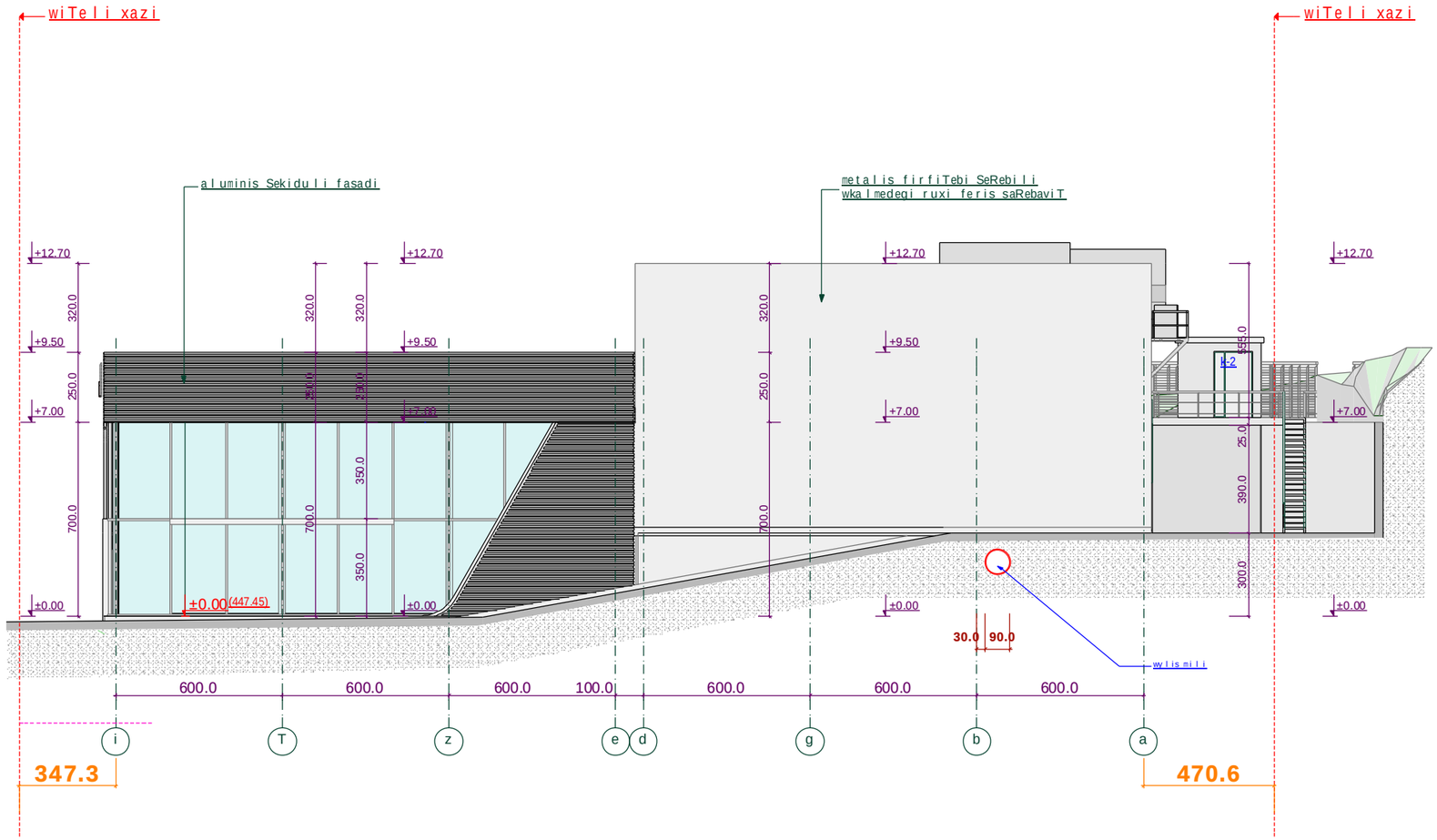


formati: A3 | dakveTa: #2014.01 | Tbilisi 2014 weli

pirobiTi niSnebi

## SeniSvnebi

zomebi mocemulia milimetrebSi

simaRleebi mocemulia metrebSi

## obieqti

audis safirmo servis-centri
mis; q. Tbilisi, sof. diRmi, TeTri duqnis mimdebare teritoria
nakveTi: 01.72.14.034.795

## damkveTi

S.p.s. „iberia avtohausi„
saidentifikacio kodi: 236081832
iur. misamarTi: q. mcxeTa, d.aRmaSenebelis q.
tel: 2 24 11 11

## Semsrulebeli

S.p.s. „anagi„
saidentifikacio kodi: 245416401
iur. misamarTi: q. baTumi, vaJa-fSavelas 42/5

| | | | |
|---|---|---|---|
| direqtori | igogoliSvili | | |
| mTavari arqiteqtori | z.kvirkvelia | | |
| | | | |
| masStabi | 1:200 | fasadi i-a RerZebSi | |
| TariRi | 2014 w. | | |
| stadia | | furcelebi | furceli |
| arqiteqturuli proeqti | | 20 | a-12 |

# fasadi 5-1 RerZebSi

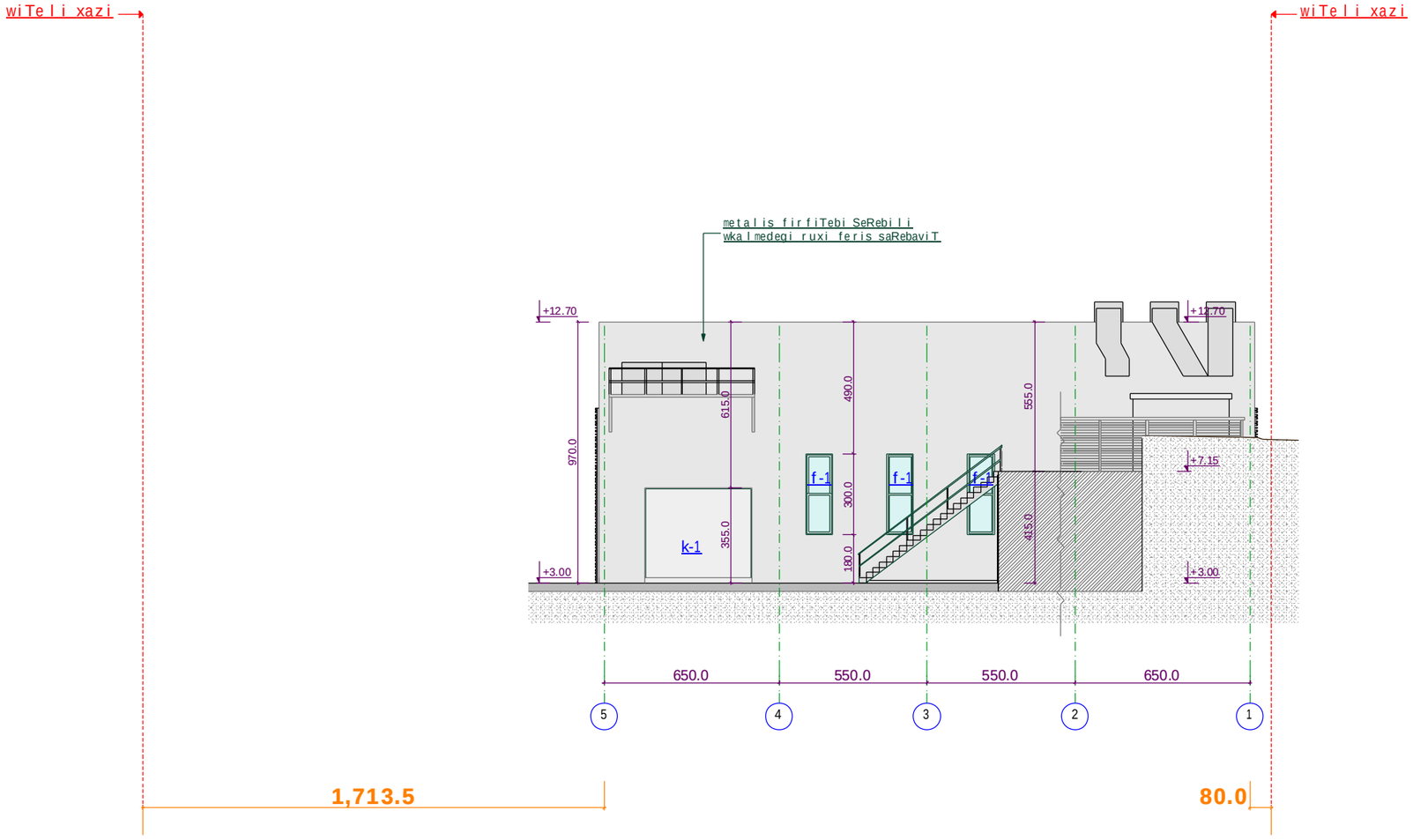


formati: A3 | dakveTa: #2014.01 | Tbilisi 2014 weli

pirobiTi niSnebi

## SeniSvnebi

zomebi mocemulia milimetrebSi

simaRleebi mocemulia metrebSi

### obieqti

audis safirmo servis-centri
mis; q. Tbilisi, sof. diRmi, TeTri duqnis mimdebare teritoria.
nakveTi: 01.72.14.034.795

### damkveTi

S.p.s. „iberia avtohausi„
saidentifikacio kodi:
236081832
iur. misamarTi: q. mcxeTa, daRmaSeneblis q.
tel: 2 24 11 11

### Semsrulebeli

S.p.s. „anagi„
saidentifikacio kodi:
245416401
iur. misamarTi: q. baTumi, vaJa-fSavelas 42/5

| | | | |
|---|---|---|---|
| direqtori | i.gogolisvili | | |
| mTavari arqiteqtori | z.kvirkvelia | | |
| | | | |
| masStabi | 1 : 200 | fasadi 5-1 RerZebSi | |
| TariRi | 2014 w. | | |
| stadia | | furcelebi | furceli |
| arqiteqturuli proeqti | | 20 | a-13 |

dacvis oTaxis Sesrulebulia msubuqi metalo-plastikis panelebiT

dacvis oTaxis fasadi 5-5

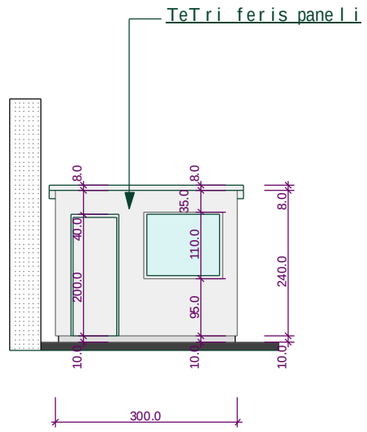


dacvis oTaxis fasadi 6-6

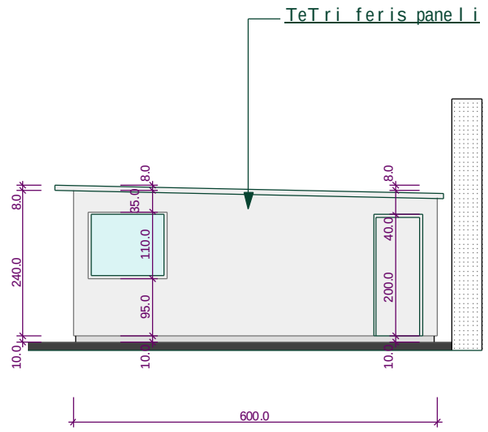


dacvis oTaxis fasadi 7-7

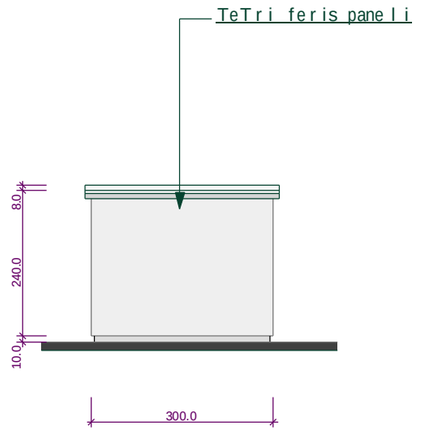


dacvis oTaxis fasadi 8-8

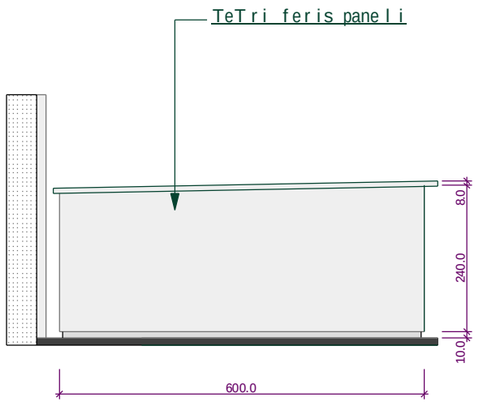


dacvis oTaxis Wrili 4-4

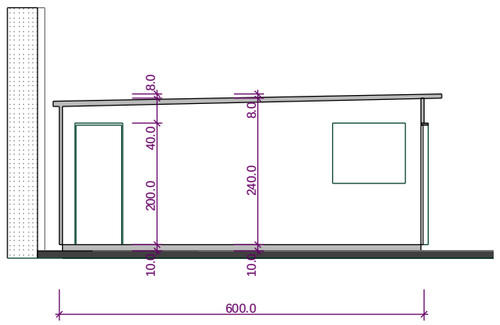


formati: 3 | dakveTa: #2014.01 | Tbilisi 2014 weli

pirobiTi niSnebi

SeniSvnebi

zomebi mocemulia milimetrebSi

simaRleebi mocemulia metrebSi

obieqti

audis safirmo servis-centri mis; q. Tbilisi, sof. diRmi, TeTri duqnis mimdebare teritoria. nakveTi: 01.72.14.034.795

damkveTi

S.p.s. „iberia avtohausi„
saidentifikacio kodi: 236081832
iur. misamarTi: q. mcxeTa, d.aRmaSeneblis q.
tel: 2 24 11 11

Semsrulebeli

S.p.s. „anagi„
saidentifikacio kodi: 245416401
iur. misamarTi: q. baTumi, vaJa-fSavelas 42/5

| | | | |
|---|---|---|---|
| direqtori | i.gogoliSvili | | |
| mTavari arqiteqtori | z.kvirkvelia | | |
| | | | |
| masStabi | 1 : 100 | dacvis oTaxis fasadebi da Wrili | |
| TariRi | 2014 w. | | |
| stadia | | furcelebi | furceli |
| arqiteqturuli proeqti | | 20 | a-21 |